Synthesis Operation

The 10-m. /hr. unit was completed toward the latter part of April 1938. Beginning May 2, a 12-day run was carried out, in which 100.1 of Co catalyst was used.[10] The results have been reported.[11] The maximum temperature difference in the apparatus was about 6° C., with an over-all average of less than 5°, showing that the cooling surface was sufficient for removal of the heat of reaction. As the result of tests in this converter, it was concluded that a cooling surface ratio equivalent to that obtained with a 25-mm. I.D. tube adequately removed the heat generated by the synthesis of hydrocarbons in a converter of this design.

OUTER-CATALYST CONVERTERS USING OIL AS COOLANT

From the above experiments it was obvious that a certain ratio of cooling surface to catalyst volume was necessary for practical operation of an inner-catalyst converter in the hydrocarbon synthesis using oil as coolant. However, the application of hot water as a coolant for catalyst beds seemed preferable to oil, as water was already in use industrially and possessed the advantage that as the heat of reaction was removed through vaporization of water a constant temperature was more easily maintained. Moreover, this utilization of reaction heat to produce steam was an additional economic advantage. As the reaction temperature was greater than 100° C., however, it was necessary to use water under pressure, which is undesirable in design and construction economics. In order to minimize the amount of pressurized construction, therefore, it was desirable to pass the coolant through the tubes instead of around them.[12] As a result, the fundamental problem in the design of the outer-catalyst converter was determination of the necessary spacing between the cooling tubes. An approximation could be obtained from the results of previous experiments, but, as the heat-transfer film coefficient of a gas varies according to whether the gas is flowing inside or outside of a tube, further experiments were indicated. Although the liquid film coefficient of heat transfer for water is much greater than that of oil and suggests that a distance between cooling tubes equal to that used in the previous converter would be too small, the gas film coefficient is probably the controlling factor. In order to obtain some orienting data preparatory to the use of water coolant, preliminary experiments were made in the following converters using oil as the cooling medium.

Converter With 3-m.^{3}/hr. Throughput

Description of Equipment

To obtain design data on these points, the converter shown in figure 11 was constructed with a catalyst capacity of 30 liters and a maximum throughput

10/ Editor's note: Presumably the same type used in the smaller unit.

11/ Kyoto Imperial University, Chemical Research Institute Lecture Series No. 9, 1939, p. 89.

12/ Editor's note: Same as German "outer-catalyst converter." Refer to Bureau of Mines Inf. Circ. 7587, The Evaluation of Converters for Exothermic and Endothermic Catalytic Reactions Occurring within Narrow Temperature Limits, by Gustav Wirth, translated and revised by R. C. Grass and H. J. Kandiner, Nov. 1950, 13 pp.

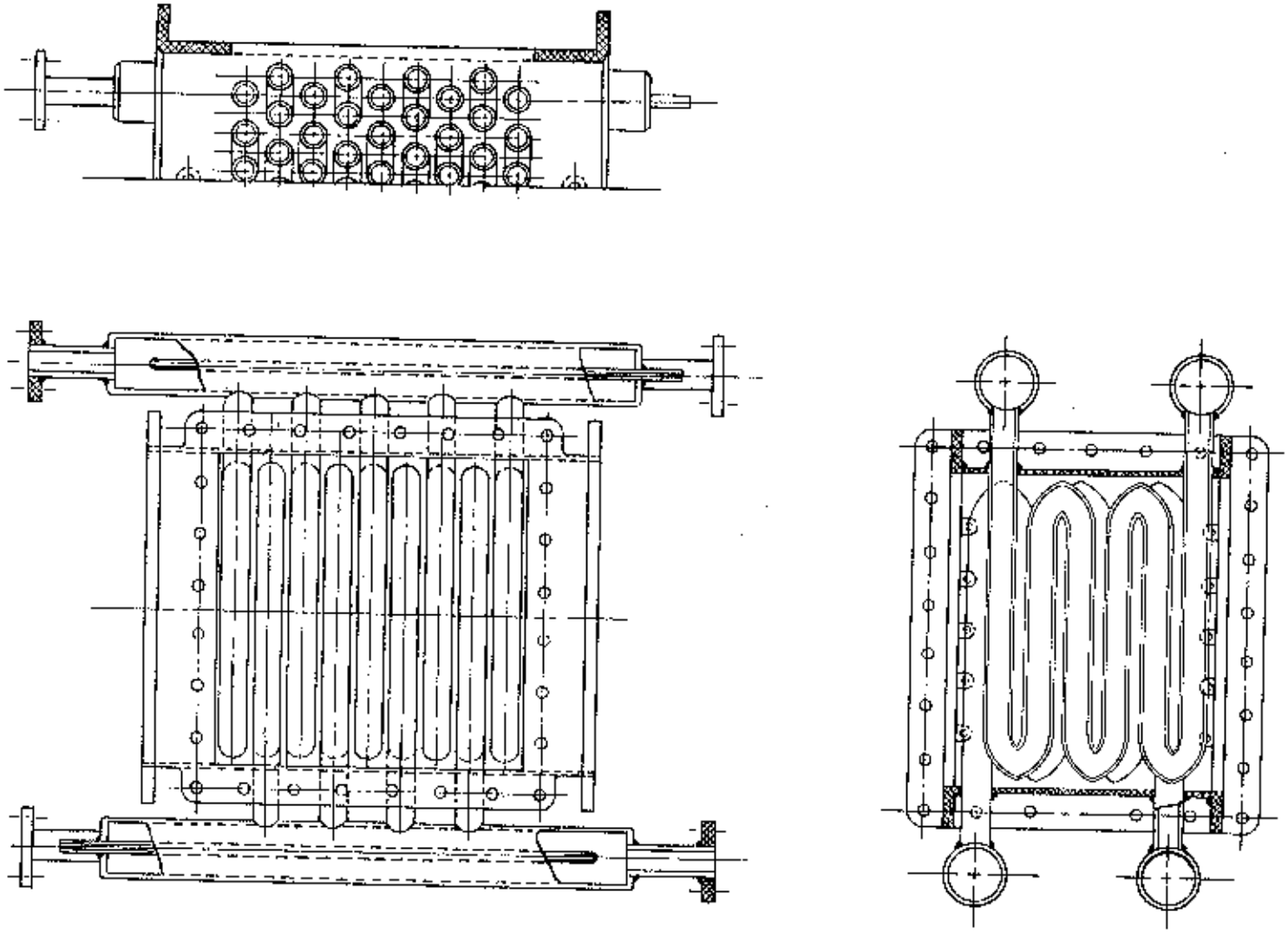

Figure 11. - 3 m.^{3}/hr. outer-catalyst converter.

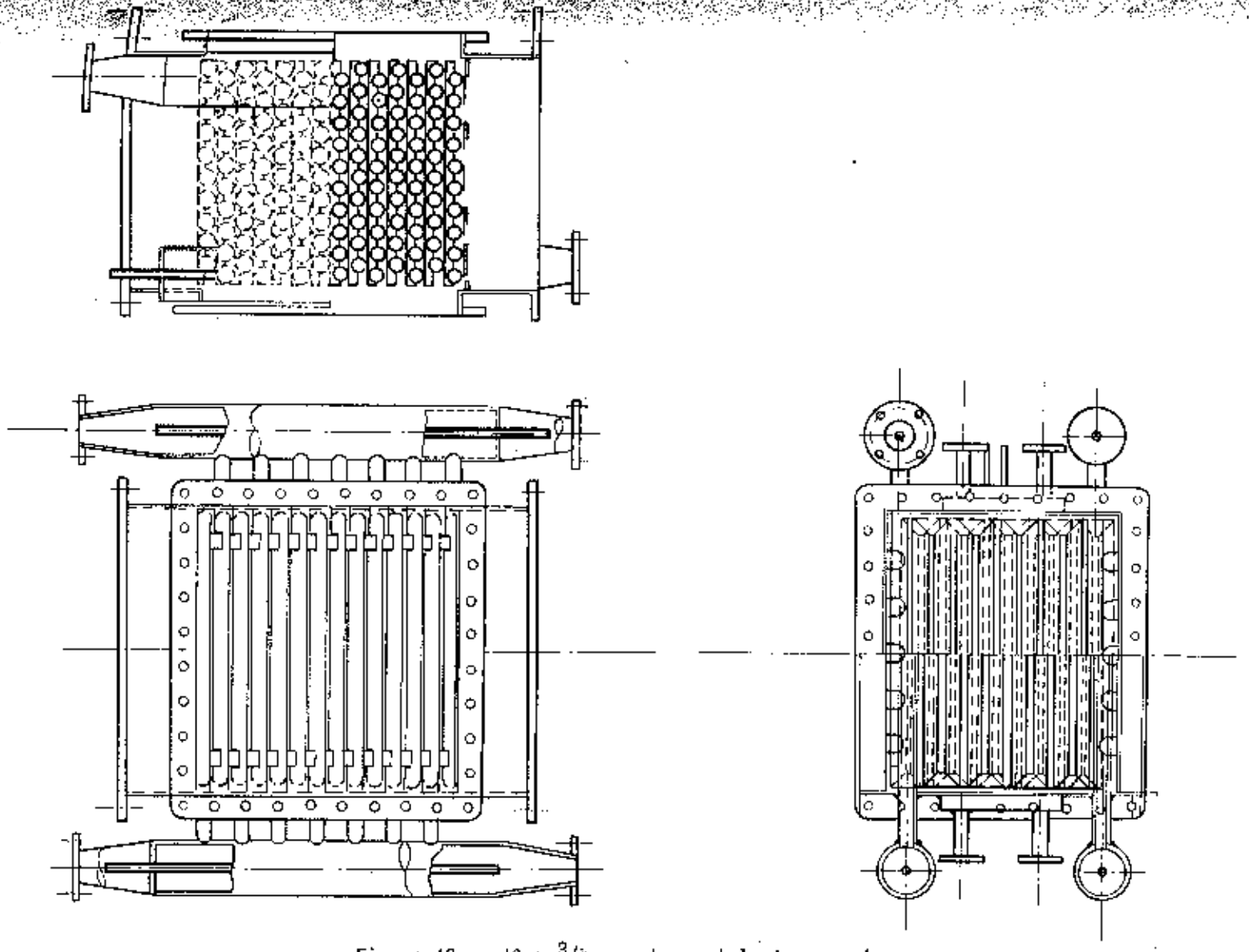

Figure 12. - 10 m.^{3}/hr. outer-catalyst converter.

of 3 m.^{3}/hr. The coolant from the manifold was separated into individual cooling tubes and, after passing through the reaction zone, was collected in a manifold, passed through a heat exchanger, and recirculated. The most difficult problem faced in the construction of this converter was that of providing a gas-tight seal at the junction of the coolant tube and reactor wall because of the small spacing between the tubes. In order to facilitate the welding employed to make this seal, the inlet and outlet lines were made interchangeable, and bends were made inside instead of outside of the catalyst space. In this converter, cooling tubes 34-mm. O.D. and 26.7-mm. I.D. were spaced 48 mm. vertically and 42 mm. horizontally (center-to-center), providing a cooling surface ratio somewhat less than that contained in the 35.7-mm. I.D. inner-catalyst converter. It was felt that a smaller cooling surface would be required in this design, because the flow of gas across the cooling tubes should increase the gas film coefficient.

Synthesis Operation

Operation of the converter was begun by using oil as a coolant and 30 liters of cobalt catalyst; the temperature distribution in the catalyst bed shown in table 3 was obtained. After 17 hours of operation, the section of catalyst at the gas inlet showed a marked increase in temperature, and the temperature difference between this section and the cooling oil reached 36° C. Temperature control of the catalyst bed was very difficult, indicating that the cooling surface was insufficient in this type of cooling tube arrangement. By packing the first half of the catalyst bed with a mixture of catalyst and inert material, temperature control of the whole bed was possible to a certain extent.

TABLE 3. - Distribution of temperature in catalyst bed during operation of oil-cooled outer-catalyst converter

(Throughput = 3 m.^{3}/hr.; 30 liters of cobalt catalyst)

Operating time, hours	Temperature cooling oil, °C.		Temperature catalyst bed, °C. a/			Gas flow, m.^{3}/hr.	Contraction, percent
	Inlet	Outlet	1	2	3		
5.....	211	211	213	206	207	2.8	45.6
17.....	204	204	240	200	200	3.4	43.3
29.....	210	210	221	216	210	3.3	49.5
41.....	211	210	213	216	213	4.3	36.8
53.....	220	220	223	225	221	2.9	45.7
65.....	215	215	215	216	217	3.0	39.0

a/ Locations numbered progressively further from converter inlet.

Converter With 10-m.^{3}/hr. Throughput

Description of Equipment

To increase the cooling surface:catalyst-volume ratio, another converter was constructed, as shown in figure 12, in which the spacing of the cooling tubes was smaller. As a large percentage of the heat generated in the

3-m.^{3}/hr. converter was lost through the converter walls, the maximum throughput of the new converter was increased to 10 m.^{3}/hr. and its capacity to 100 liters of catalyst. The same size cooling tubes were used spaced (center-to-center) at 45-mm. vertical intervals and 39-mm. horizontal intervals. Table 4 shows the temperature distribution existing in a bed containing 95 liters of a cobalt catalyst. A maximum temperature difference of 9° C. was maintained, and the temperature was relatively easy to control. This particular cooling surface ratio must therefore have been sufficient, even though it was less than that of the inner-catalyst converter.

TABLE 4. - Distribution of temperature in catalyst bed during operation of oil-cooled outer-catalyst converter

(Throughput = 10 m.^{3}/hr.; 100 liters of cobalt catalyst)

Operating time, hours	Temperature cooling oil, °C.		Temperature catalyst bed, °C.a/				Gas flow m.^{3}/hr.	Contraction, percent
	Inlet	Outlet	1	2	3	4		
25.....	210.5	210	210	217	215	216	9.0	39.7
33.....	211	211	213	219	216	211.5	8.5	42.3
41.....	210	210	210.5	218.5	214	214.5	9.7	43.7
49.....	213	213	231	222	217	218	9.1	43.8
57.....	215	213	215	220	217	218.5	7.3	40.0

a/ Locations numbered progressively further from converter inlet.

In this particular converter, the rows of cooling tubes were staggered, and, in order to increase the heat transfer from gas to tubes, gas flows at both right angles and parallel to the staggered rows were tried. No significant differences were observed, however, in the temperature distribution in the bed.

As the necessary data were obtained from the two converters just described, it was not necessary to construct two other converters that had already been designed. These converters are shown in figures 13 and 14, in which the spacing between the cooling tubes was greater and less, respectively, than in the 3-m.^{3}/hr. converter. That is, the vertical centers were 58 mm. and 43 mm., respectively, and the horizontal centers were 51 mm. and 37.5 mm., respectively.

OUTER-CATALYST CONVERTERS USING WATER AS COOLANT

From the previous experiments with oil-cooled outer-catalyst converters, the minimum allowable spacing between cooling tubes for these conditions was determined. As the final objective was the construction of a water-cooled convertor capable of handling 100 m.^{3} of gas per hour, a small unit using water as a cooling medium was built.

Converter With 6-m.^{3}/hr. Throughput

Description of Apparatus

This unit was similar to that shown in figure 5, except that it was designed for a maximum throughput of 6 m.^{3}/hr. and that the oil-cooling

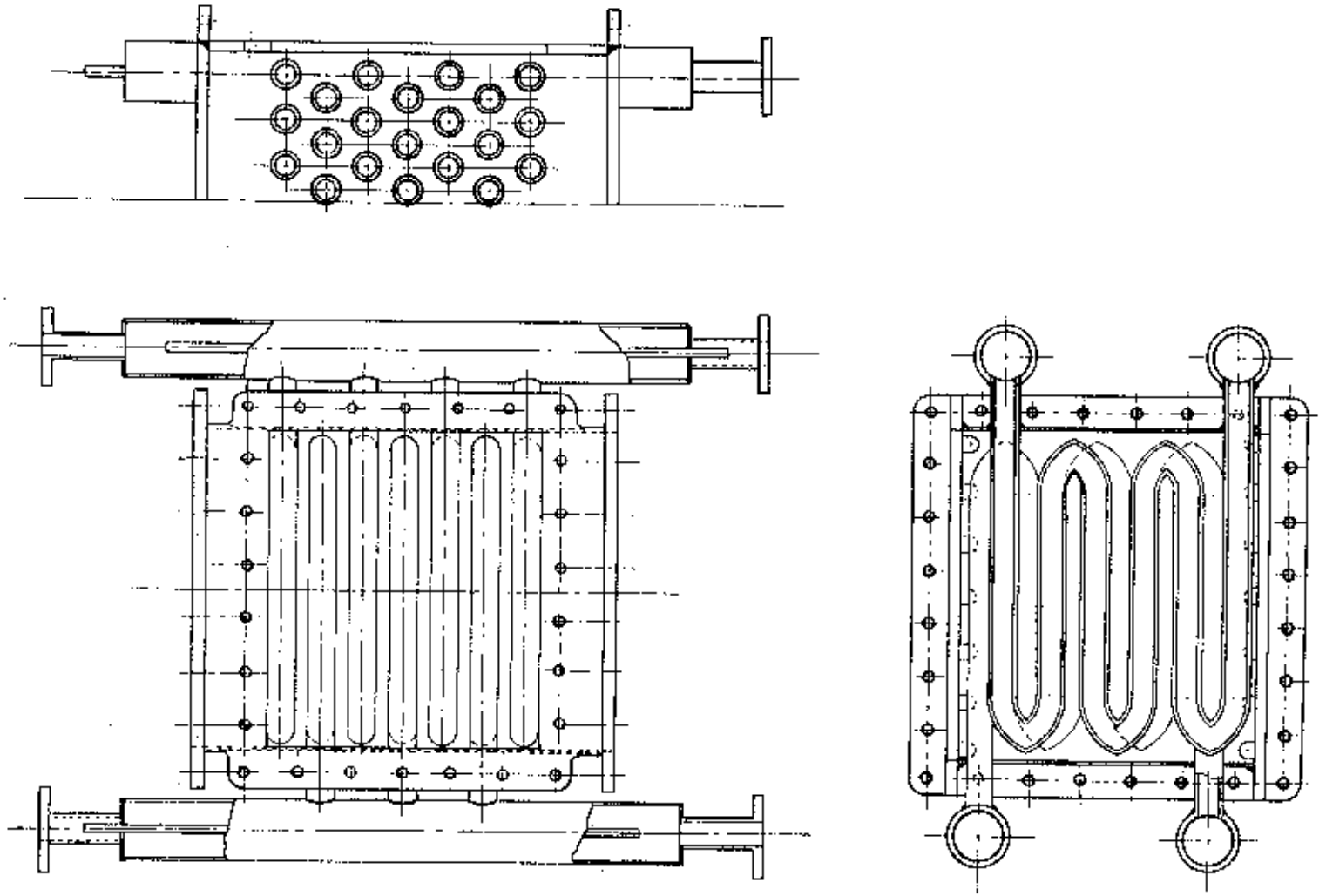

Figure 13. - Proposed outer-catalyst converter (tube centers 58 mm. x 51 mm.).

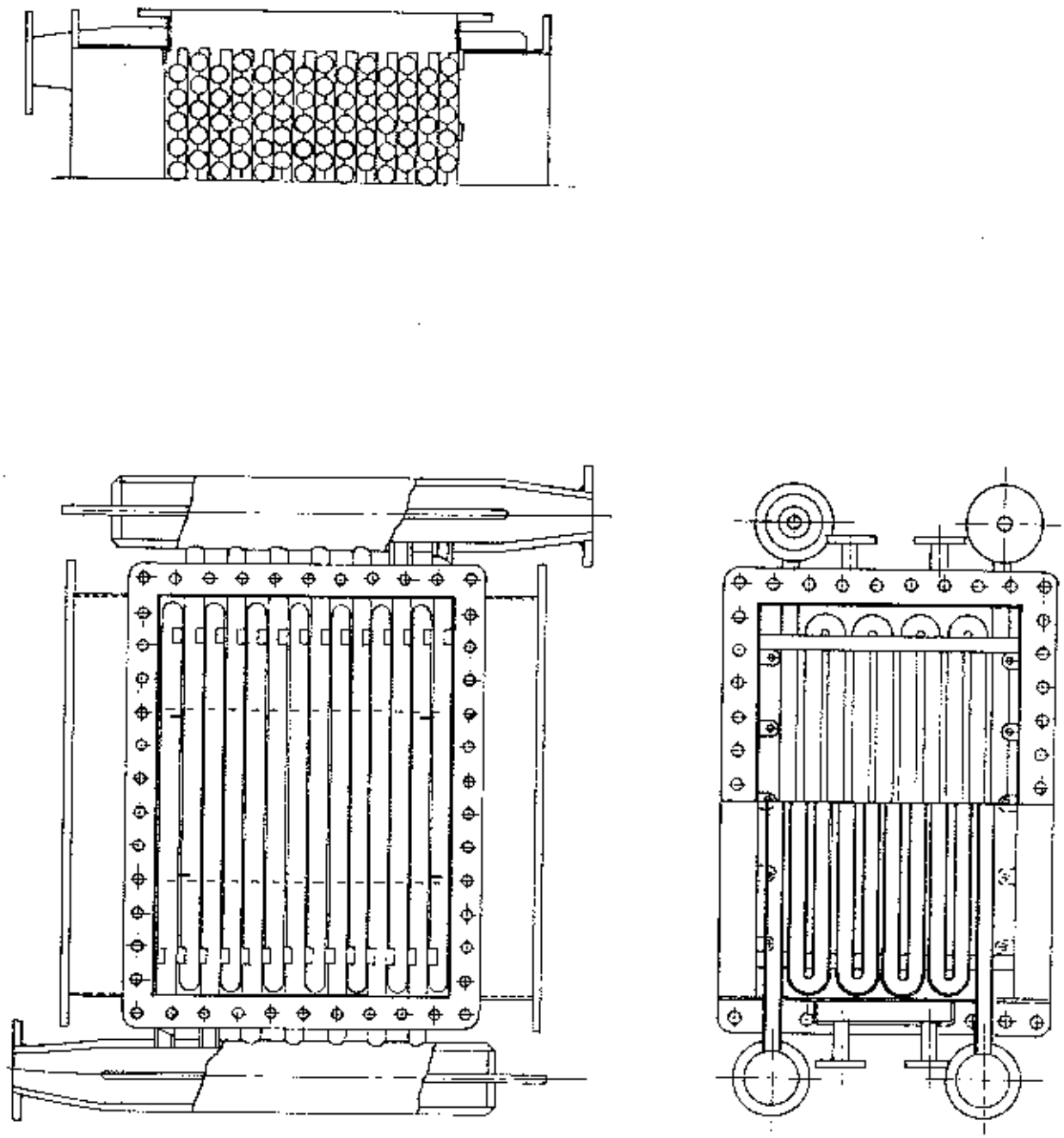

Figure 14. - Proposed outer-catalyst converter (tube centers 43 mm. x 37.5 mm.).

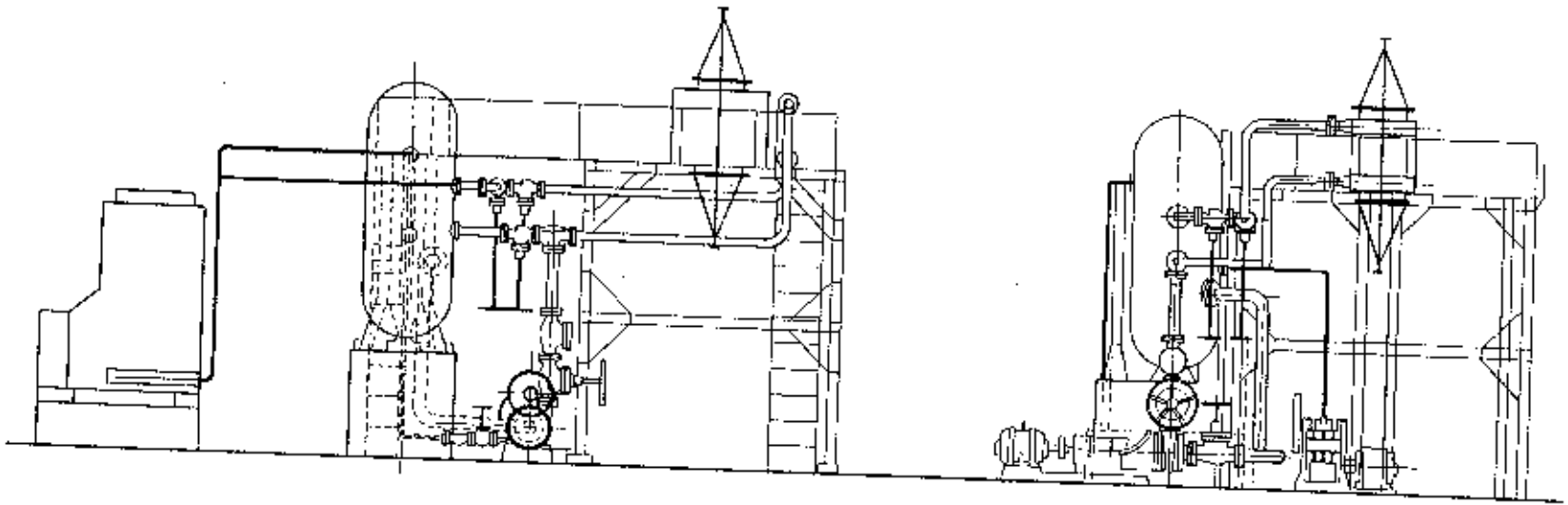

Figure 15. - Hot water circulation apparatus (6 m.^{3}/hr. outer-catalyst converter).

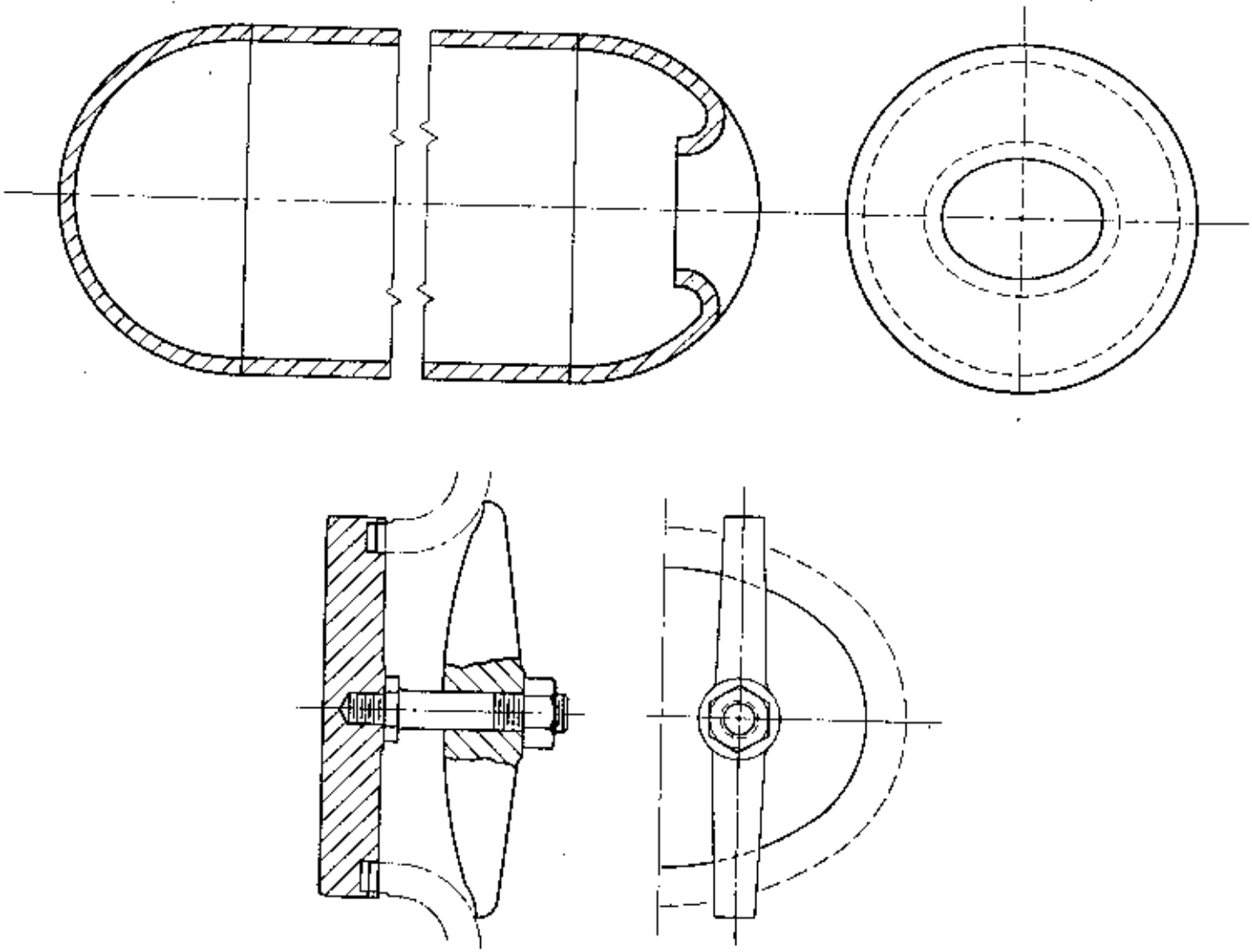

Figure 16. - Hot-water drum (6 m.^{3}/hr. outer-catalyst converter).

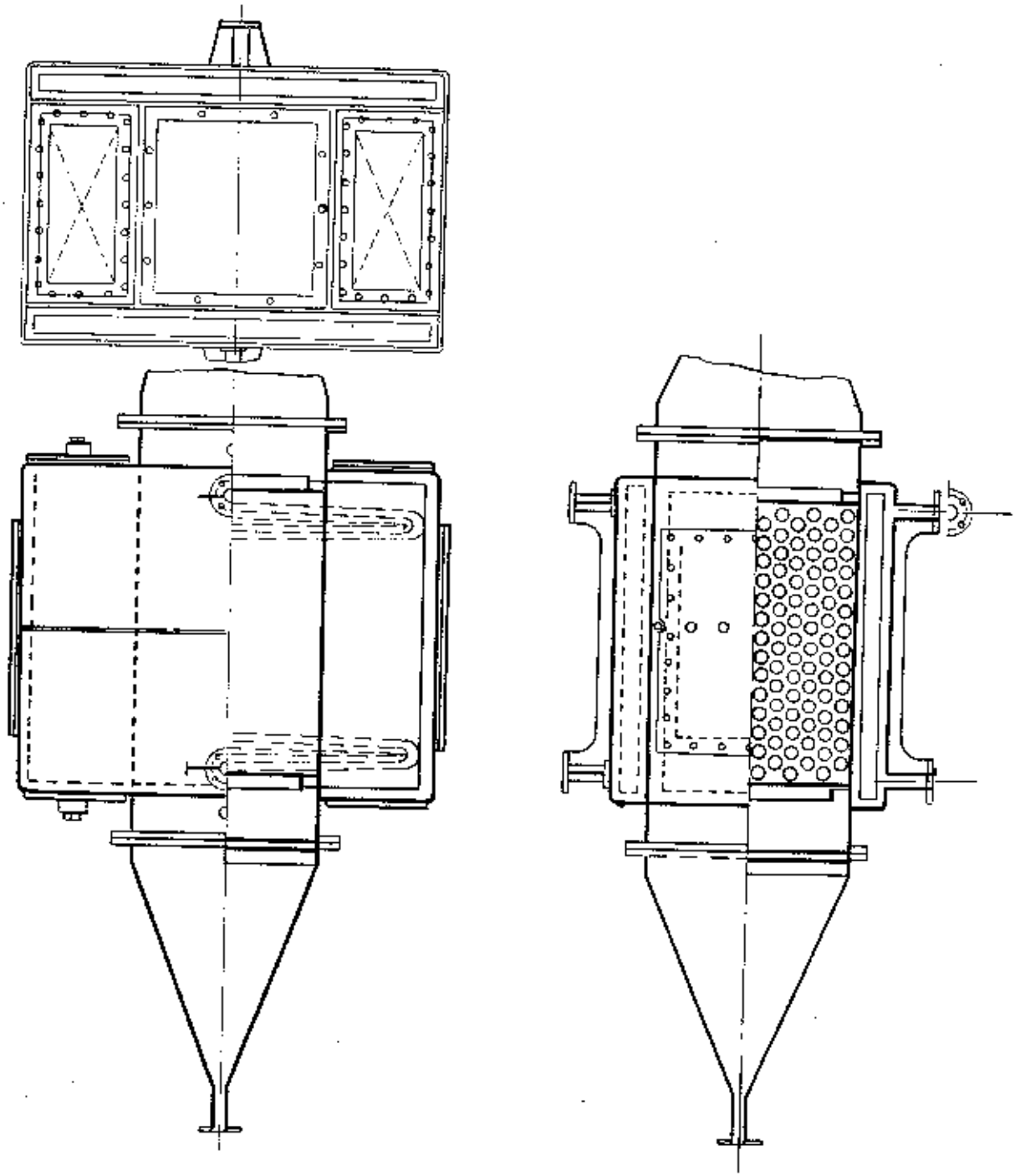

Figure 17. - 6 m.^{3}/hr. outer-catalyst converter.

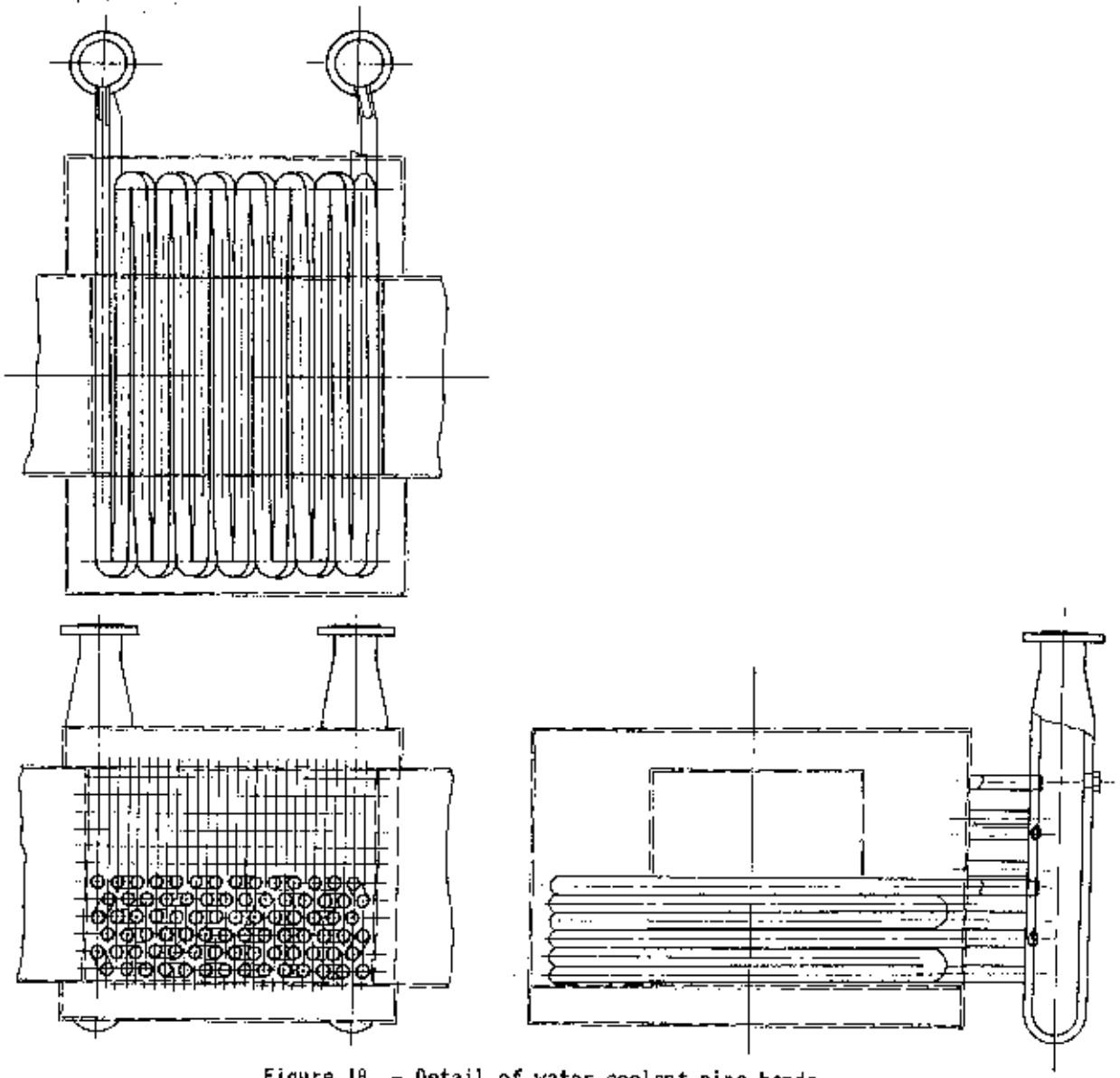

Figure 18. - Detail of water-coolant pipe bends.

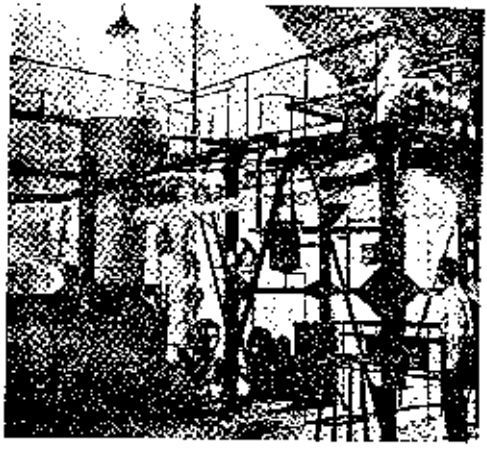

Figure 19. - Hot-water drum, hot water circulation pump and 5 cubic meter per hour outer-catalyst converter.

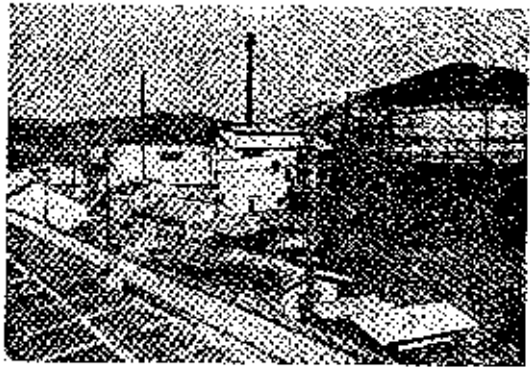

Figure 20. - General view of 100 cubic meter per hour pilot plant.

system was replaced by the water-cooling system shown in figure 15. This system consisted of a water heater, hot-water circulation pump, hot-water storage tank, heat exchanger in converter, and a water-supply pump. The hot water that serves as a coolant is stored in the hot-water drum after the steam has been condensed and the water has cooled in a heat exchanger. The hot water in the drum circulates again by being pumped through the converter.

It was considered desirable to design this apparatus so that it could be used with iron catalysts as well as cobalt catalysts. However, although a hot-water pressure of 10 or 25 atmospheres was sufficient when cobalt catalysts were used at a reaction temperature 180° to 220° C., the use of iron catalysts at their reaction temperature between 230° and 250° C. would require a hot-water pressure of 27 to 40 atmospheres. It was finally decided to use the "Lamont" boiler manufactured by the Kawasaki Heavy Equipment Manufacturing Co.; this company was entrusted thereafter with the construction of all synthesis equipment.

Except for the converter, all the equipment in this experiment was constructed so that it could be adapted to the proposed 100-m.^{3}/hr. unit. Thus, the heater and other auxiliary equipment connected to the hot-water circuit were constructed to withstand a maximum pressure of 50 kg./cm.^{2} and a maximum temperature of 262° C. The hot-water circulating pump had a capacity of 26 tons/hr., receiving water at a pressure of 50 kg./cm.^{2} and delivering it at 53 kg./cm.^{2} Figure 16 shows the construction of the hot-water drum, which, having an inside diameter of 780 mm. and a thickness of 34 mm., was constructed by welding.

The converter, containing tubes 25.6 mm. I.D. and 32 mm. O.D., was designed to hold 60 liters of catalyst. Its 168 cooling tubes were designed to be spaced, originally, on 42.5-mm. vertical centers and 36.5-mm. horizontal centers, but this spacing was decreased slightly in view of the results obtained with the 10-m.^{3}/hr. oil-cooled converter.

One of the difficulties faced in the construction of this converter was, as in the previous experiment, that of making the junctions of the cooling tubes with the reactor wall gas-tight, a natural outcome of packing so many heavy tubes into such a small space. The construction of the converter is shown in figure 17. To eliminate the necessity of constructing so many seals, the bends in the cooling tubes were contained inside the catalyst space as before. The "bends" in the cooling tubes were not formed by actually bending the tubes. Instead, they were constructed, as shown in figure 18, by welding the tubes into cups. As a result, it was impossible to maintain the exact spacing near the "bent" sections of the tubes, and the volumes containing these sections of tubing were separated from the volume packed with catalyst by partitions. As these partitions were not gas-tight, the flow of synthesis gas into the "bent-tube" volumes was inhibited by filling them with diatomaceous earth. To avoid heat losses through the converter walls, the converter was enclosed in an oil bath maintained at the reaction temperatures. Figure 10 shows the Lamont boiler; the hot-water drum, hot-water circulation pump, and converter are shown in figure 19.

4056

Synthesis Operation

Construction of this equipment was completed in September 1939, and a continuous 13-day test was made from September 22 to October 3, using cobalt as catalyst. The results were good. The operation was essentially trouble-free and 99.3 liters of synthesis oil were produced from 1309.1 m.^{3} of gas. After reducing the catalyst and establishing the desired synthesis conditions, an average gas contraction of 54.1 percent and an oil yield of 83 cm.^{3}/m.^{3} of synthesis gas were obtained. Computed on the basis of effective gas in the raw synthesis gas, an oil yield of 104 cm.^{3}/m.^{3} was obtained. This is comparable to the value of 111 cm.^{3}/m.^{3} obtained in the laboratory. The temperatures of the various sections of the converter during the synthesis are shown in table 5. The maximum temperature difference in the catalyst bed was 5° C., indicating that the reaction heat was removed efficiently and that the cooling surface was adequate. The fact that the temperature of this catalyst bed was more uniform than that in the 10-m.^{3}/hr. oil-cooled outer catalyst converter is no doubt, due to the higher thermal conductivity of water compared to oil, as well as to the larger cooling-surface:catalyst-volume ratio.

TABLE 5. - Distribution of temperature in 6 m.^{3}/hr. water-cooled outer-catalyst converter.

Operating time, hours	Water temperature, °C.		Temperature of catalyst bed, °C.					Water pressure, kg./cm.^{2}	Gas flow m.^{3}/hr.	Contraction percent
	In	Out	Upper	Lower	Side	Side	Middle			
8	206	206	205.5	205.5	206	205.5	205	16.2	5.6	7.2
32	207.5	207.5	208	210	210	209	208	17.0	5.5	48.5
56	212	212	215.5	212	218	218	213	18.5	6.1	59.2
80	210	210	213	212	215.5	215	213	18.0	5.3	62.3
104	210	210	212	212	216	216	212	18.0	5.8	54.7
128	210.5	210	212	212	215	215	212	18.0	5.5	59.1
152	210	210	212	212	214.5	214.5	213	18.0	6.1	51.4
176	210	210	211	212	214	214	212	18.0	5.7	49.6
200	210.5	210	212	212	215	215	213	18.1	6.0	45.6
224	210.5	210	212	212	214.5	214.5	212	18.1	4.5	48.1
248	212	212	214	214	216	216	214	18.9	5.4	52.2

Converter With 100-m.^{3}/hr. Throughput

In the preceding experiment, the necessary relationship between cooling-tube spacing and catalyst volume was determined when using water as the coolant. With this information, the design and construction of a 100-m.^{3}/hr. water-cooled outer-catalyst converter was approached. It was expected that, because the 6-m.^{3}/hr. water-cooled converter contained a relatively large ratio of surface area of the reactor wall to volume of catalyst, when a much larger unit was operated in which this ratio was smaller, more internal cooling would be necessary to maintain a uniform catalyst-bed temperature, because the heat lost through the reactor walls by conduction would be proportionately less. Tests with the 100-m.^{3}/hr. converter, however, showed that in this unit such was not the case.

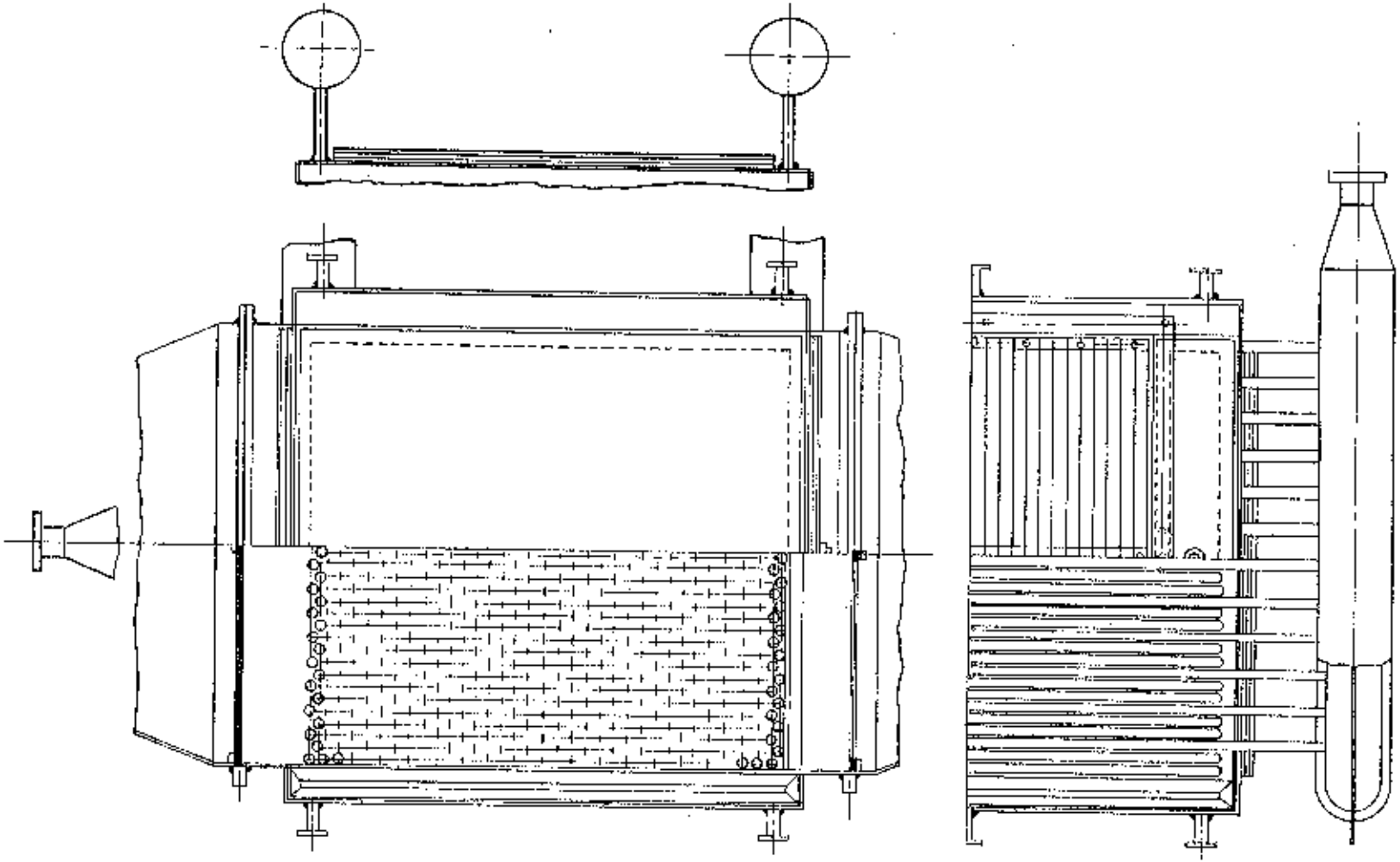

Figure 21. - 100 m.^{3}/hr. outer-catalyst converter (original design).

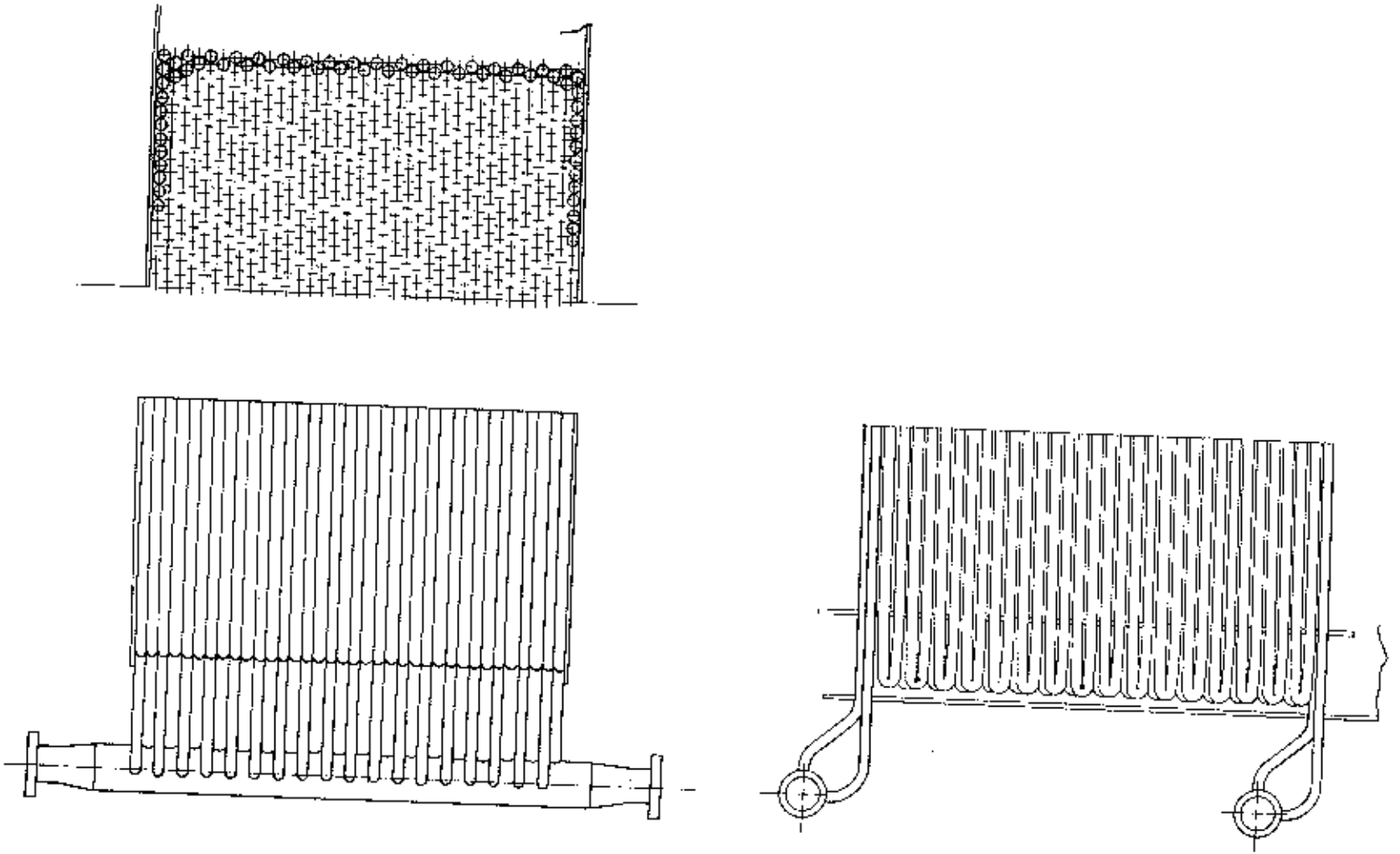

Figure 22. - 100 m.^{3}/hr. outer-catalyst convertor (as constructed).

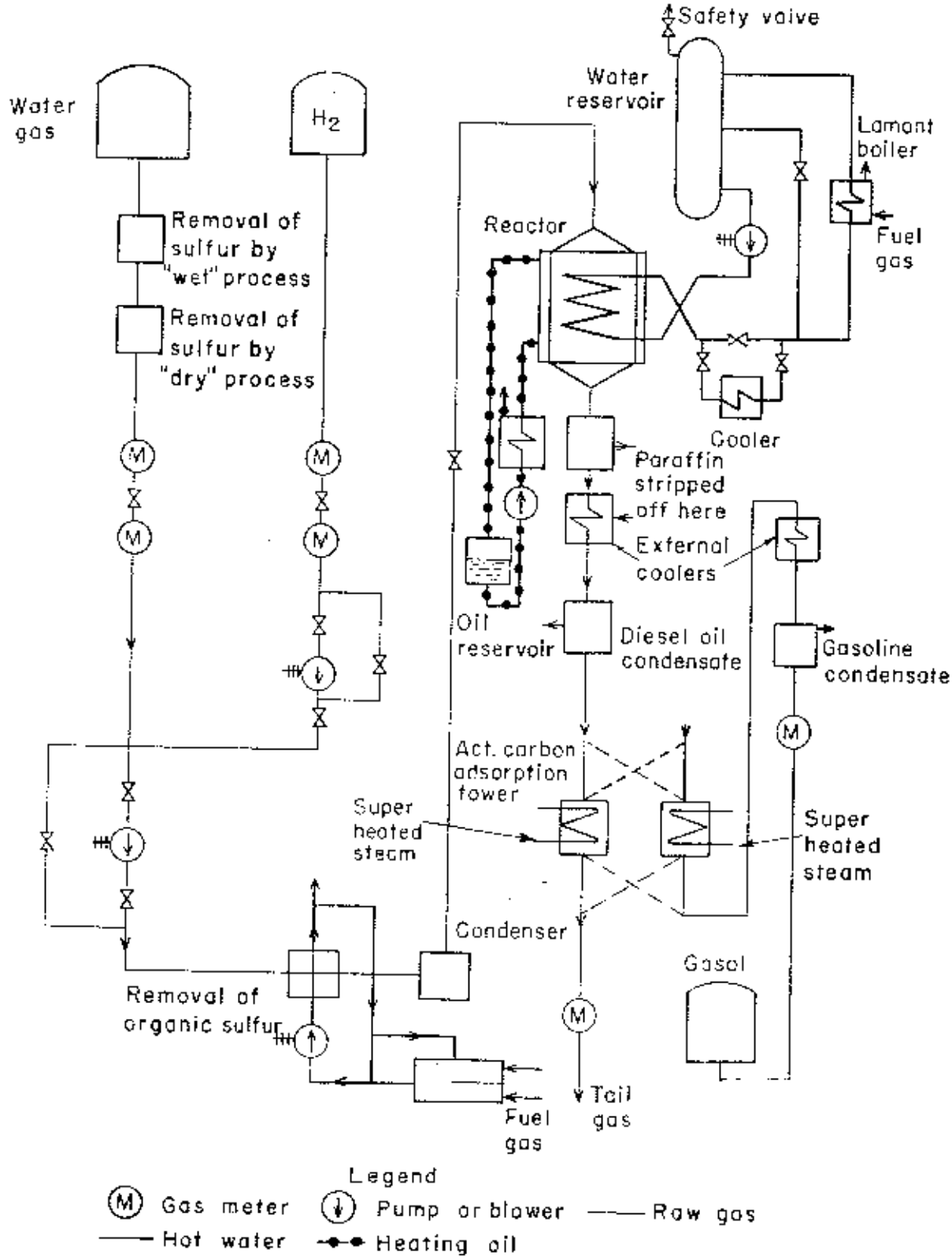

Figure 23. - Flow diagram of pilot-plant process.

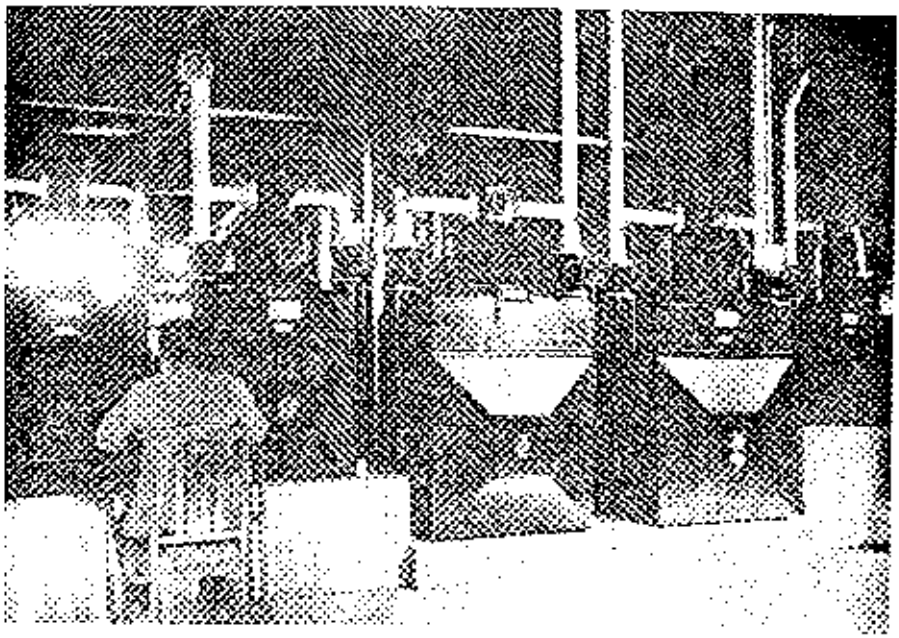

Figure 24. - Gas-meter assembly: (left to right) H_2, water gas, synthesis gas, exit gas, gasol.

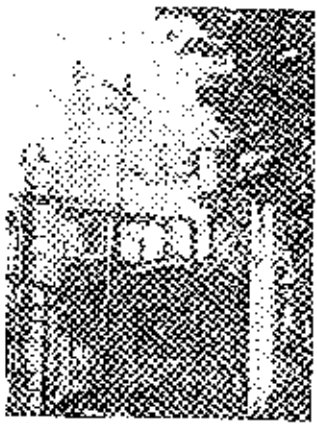

Figure 25. - Wet-type gas desulfurizer: left, washing tower; right, tower for reactivating desulfurizing solution.

Description of Equipment

Figure 21 shows the original design for the 100-m.^{3}/hr. converter. When construction was begun, however, a few changes were made, and figure 22 shows a section of the converter as it was actually constructed. The principle of this design is the same as that of the 6-m.^{3}/hr. converter just described. The tube spacing in the 100-m.^{3}/hr. unit, however, was somewhat greater; 1,224 cooling tubes, having an inside diameter of 25.6 mm. and an outside diameter of 32 mm., were distributed on 42.5-mm. vertical centers and 36.8-mm. horizontal centers.

Figure 20 shows a general view of the oil-synthesis pilot plant. The flow sheet for this pilot plant is shown in figure 23. The product gases emerging from the reactor were stripped of paraffin; after water cooling, the condensed Diesel oil was separated, and the light-oil fraction was adsorbed on activated charcoal. The tail gas was then released to the atmosphere. The light-oil fraction was stripped from the charcoal adsorbers with superheated steam, and the gaseous product was cooled with water to yield a condensate (gasoline) and noncondensable hydrocarbons (C_3+C_4) called "gasol." All equipment used in recovering the product gases from the reactor was designed and constructed especially for this unit. The collection of meters for measuring the flows of the various gas streams is shown in figure 24.

Experimental Procedure; Cobalt Catalyst

Synthesis Gas Preparation

Production of components, CO and H_2. - The use of cobalt catalysts requires a synthesis gas with an H_2:CO ratio of 2:1, and a gas of this composition can be prepared by mixing the proper proportions of water gas and electrolytic hydrogen. A water-gas supply of 400 to 500 m.^{3}/hr. was available from the Osaka Gas Co., which used a low-sulfur coke to produce a water gas similar to the fuel gas supplied to the Kyoto University from the Kyo-Dar plant. Electrolytic hydrogen was produced in a Simmons-type electrolytic cell with a maximum capacity of 23 m.^{3}/hr.

Operation of the water-gas producer at high temperatures was disadvantageous for two reasons. First, it favored the formation of troublesome coke "clinkers," and, second, the H_2:CO ratio of the resulting gas required the addition of electrolytic hydrogen (to meet the required synthesis gas throughput of 100 m.^{3}/hr.) beyond the capacity of the available unit. From these considerations it was decided to produce a water gas containing about 35 percent CO. The gas producers were operated from 9 to 11 a.m. and from 8 to 10 p.m. to yield about 900 m.^{3} of gas during each 2 hour run; this gas was scrubbed with water and stored in a gasholder. The composition of water gas thus obtained is shown in table 6; the gas analyses were carried out in a modified Orsat apparatus, and the sulfur content was determined by burning a sample of the gas, passing the combustion products into sodium carbonate solution, and titrating the remaining sodium carbonate with hydrochloric acid (ASTM method). The hydrogen obtained from the electrolytic cell was washed with water and stored in a gasholder. This hydrogen was about 99.9 percent pure; the impurity was assumed to be oxygen.

4056

TABLE 6. - Composition of water gas

Date, month/day	Time	Hours since start of Experiment 17	Gas composition, volume percent						Sulfur, gm./100 m.³	
			CO_2	O_2	CO	H_2	CH_4	N_2	Total	Organic
7/19.....	7 p.m.-10 p.m.	-	9.8	0.2	33.0	48.2	1.7	7.1	16.8	16.5
20.....	9 a.m.-11 a.m.	-	10.2	.0	34.2	47.3	2.5	5.8	12.1	11.9
20.....	7 p.m.-10 p.m.	9-12	7.8	.3	36.5	47.7	1.4	6.3	15.9	15.1
21.....	9 a.m.-11 a.m.	23-25	8.0	.1	36.8	46.8	1.5	6.8	15.2	14.9
21.....	8 p.m.-10 p.m.	34-36	7.2	.1	37.7	48.0	.5	6.5	16.1	15.4
22.....	9 a.m.-11 a.m.	47-49	8.0	.2	36.2	46.0	2.1	7.5	12.7	10.4
22.....	8 p.m.-10 p.m.	58-60	8.5	.2	36.9	46.8	1.4	6.2	14.5	14.0
23.....	9 a.m.-11 a.m.	71-73	9.2	.1	34.7	46.4	2.0	7.6	11.0	10.8
23.....	8 p.m.-10 p.m.	82-84	9.7	.3	35.0	47.4	1.4	6.2	13.1	11.4
24.....	9 a.m.-11 a.m.	95-97	8.7	.2	35.0	48.2	1.4	6.5	14.2	11.9
24.....	8 p.m.-10 p.m.	106-108	8.6	.2	37.8	44.8	1.1	7.5	11.3	10.4
25.....	10 a.m.- noon	120-122	9.5	.0	34.5	47.6	1.1	7.3	15.7	11.0
25.....	8 p.m.-10 p.m.	130-132	8.9	.1	34.6	47.7	2.1	6.6	17.9	12.7
26.....	9 a.m.-11 a.m.	143-145	9.4	.2	34.8	46.9	2.0	6.8	12.1	10.1
26.....	8 p.m.-10 p.m.	154-156	8.3	.2	35.4	48.0	1.8	5.8	10.1	10.0
27.....	9 a.m.-11 a.m.	167-169	8.8	.2	35.0	47.5	1.1	7.4	12.1	11.0
27.....	8 p.m.-10 p.m.	178-180	9.0	.2	34.9	47.5	1.8	6.6	12.9	12.6
28.....	9 a.m.-11 a.m.	191-193	9.6	.2	34.4	46.9	1.1	7.8	12.9	11.4
28.....	8 p.m.-10 p.m.	202-204	8.9	.2	35.4	47.4	1.4	6.7	10.2	10.1
29.....	9 a.m.-11 a.m.	215-217	9.5	.2	35.1	46.3	1.9	7.0	11.6	11.2
29.....	8 a.m.-10 a.m.	226-228	9.8	.2	34.4	46.9	1.8	6.9	13.7	13.1
30.....	9 a.m.-11 a.m.	239-241	9.4	.2	35.8	46.4	1.6	6.6	11.7	10.0
30.....	8 p.m.-10 p.m.	250-252	9.5	.2	34.9	46.5	1.8	7.1	10.4	9.4
31.....	9 a.m.-11 a.m.	263-265	9.2	.2	35.6	46.3	1.6	7.1	12.0	10.7
31.....	8 p.m.-10 p.m.	274-276	9.0	.2	34.9	47.7	1.5	6.7	10.1	9.8
8/1.....	9 a.m.-11 a.m.	287-289	8.8	.1	35.9	46.3	1.6	7.3	11.9	10.4
1.....	8 p.m.-10 p.m.	298-300	8.8	.1	35.4	47.6	1.5	6.5	12.7	12.1
2.....	9 a.m.-11 a.m.	311-313	9.2	.2	34.7	47.9	1.4	6.6	13.4	11.7
2.....	8 p.m.-10 p.m.	322-324	9.3	.2	35.1	46.4	1.8	7.2	12.1	10.9
3.....	9 a.m.-11 a.m.	-	8.5	.2	35.3	46.8	1.1	8.1	22.8	8.2

Purification and formulation of synthesis gas. - The water gas from the gasholder was first scrubbed to remove hydrogen sulfide in a "wet" process and was then passed through a dry desulfurization chamber containing iron hydroxide and sawdust. Figure 25 shows the wet-type gas desulfurizer with the washing tower on the left and the tower for reactivating the desulfurizing solution on the right. To this purified water gas was then added enough electrolytic hydrogen to yield 100 cubic meters of synthesis gas per hour containing about 84.5 percent of carbon monoxide and hydrogen in a ratio of 1 to 2. This gas mixture was then forced, by means of a blower, through an oven designed to remove organic sulfur from 100 cubic meters of gas per hour (Fig. 26). As shown in figure 27, city (fuel) gas was burned in a furnace, and the hot combustion gases were blown over the oven. Inside this oven, the organic sulfur in the synthesis gas was "fixed" by about 800 liters of tablets composed of 20 percent copper, 3 percent caustic soda, and 77 percent diatomaceous earth,

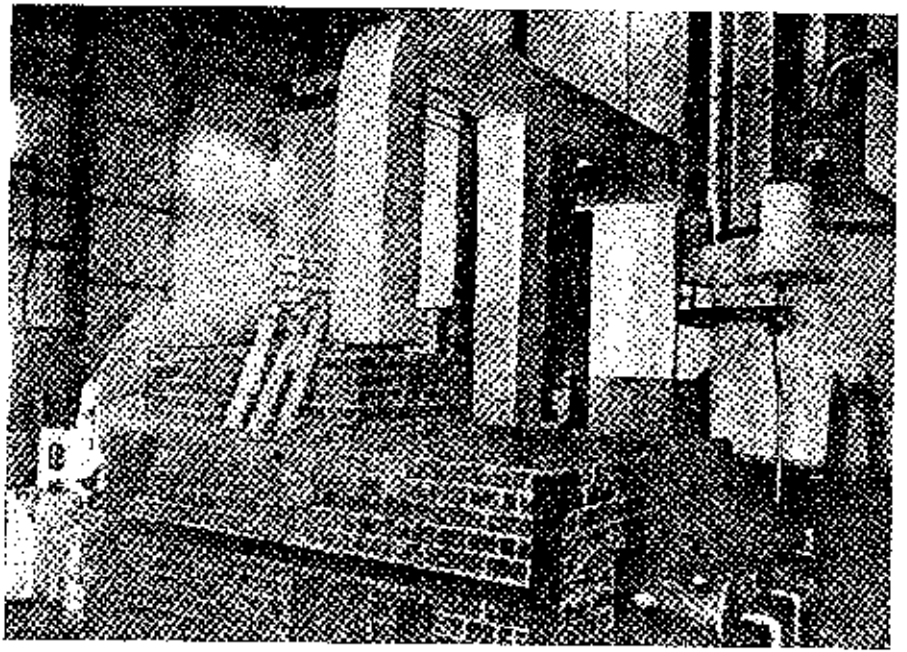

Figure 26. - Apparatus for removing organic sulfur.

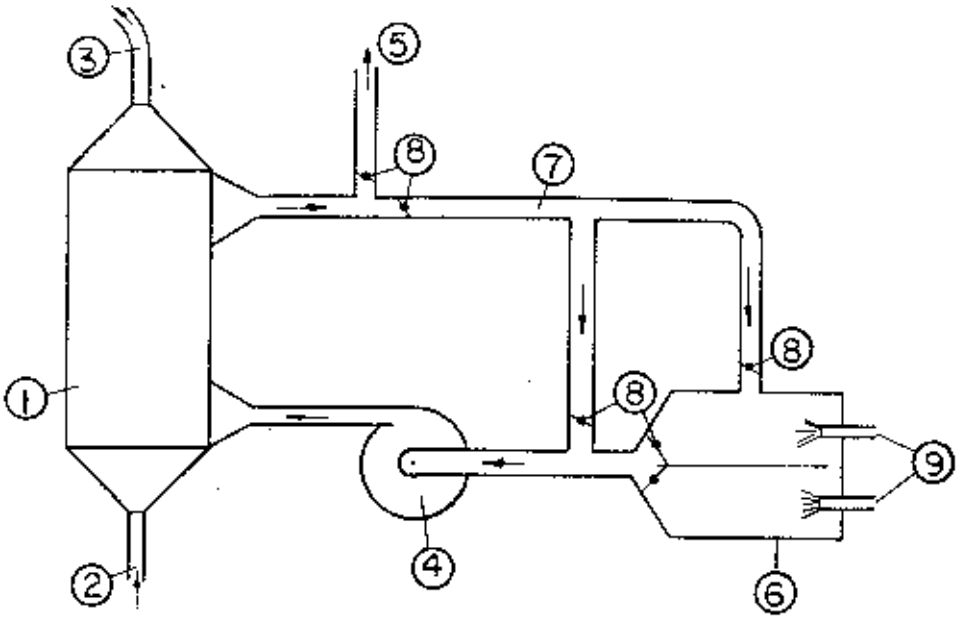

1 Furnace
2 Gas inlet
3 Gas outlet
4 Gas blower
5 Stack
6 Combustion furnace
7 Circulating pipe
8 Damper
9 Fuel gas burner

Figure 27. - Diagram of sulfur-removal system.

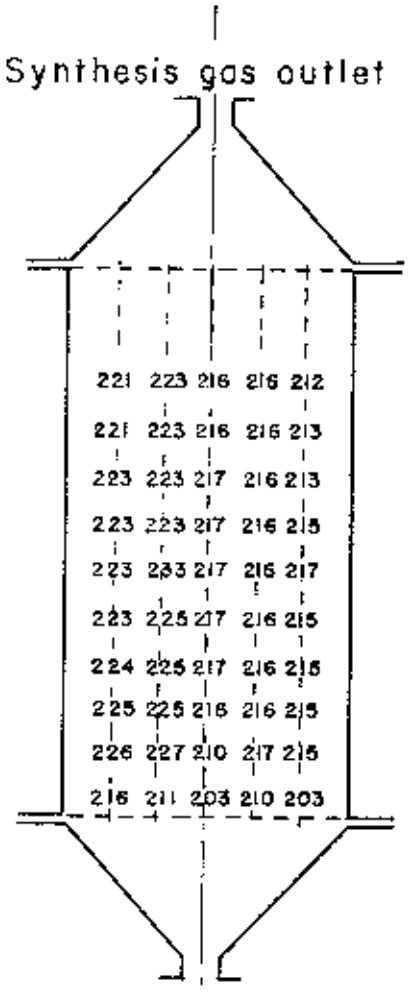

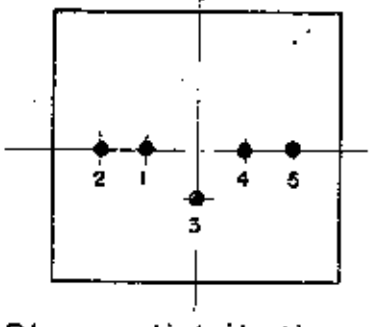

Planar distribution of thermocouples

Figure 28. - Temperature distribution in sulfur-removal furnace.

which supplanted the original iron compound (luxmasso-copper hydroxide-alkali) used for this purpose. The compound in use possessed the advantage that, unlike the iron compound, it did not promote side-reactions at high temperatures, resulting in the decomposition of carbon monoxide and the production of methane. By adjusting the blower and the baffle system, a stable temperature distribution of 200° to 220° C. was finally established throughout the mass of sulfur-fixing pellets; this temperature distribution is shown in figure 28. The temperatures existing at points 1 to 5 (fig. 28) and the inlet and outlet temperatures of the combustion products are listed in table 7 along with the sulfur contents of the emerging synthesis gas; a gradual increase in the latter can be observed. The small amount of sulfur present in the emerging synthesis gas was determined by converting it to barium sulfate.

TABLE 7. - Removal of organic sulfur from synthesis gas

Date, month/day	Time	Hours since start of experiment 17	Temperature distribution in oven, °C.							Sulfur content of emerging synthesis gas gm./100 m.³
			Combustion products		Thermocouples a/					
			Inlet	Outlet	1	2	3	4	5	
7/19.....	1 a.m.-4 a.m.	-	233	195	223	226	219	219	214	< 0.07
20.....	1 a.m.-5 a.m.	-	240	203	230	227	226	220	220	< .07
21.....	Midnight-4 a.m.	14-18	240	206	233	233	227	227	226	.09
22.....	1 a.m.-5 a.m.	39-43	240	204	233	233	230	226	226	.12
23.....	1 a.m.-5 a.m.	63-67	240	203	233	233	227	230	230	.07
24.....	2 a.m.-6 a.m.	88-92	240	200	233	233	227	230	226	.15
25.....	11 p.m.-10 a.m.	133-144	226	197	218	218	212	212	212	.09
26.....	10 p.m.-6 a.m.	156-164	226	198	222	218	213	209	202	.15
27.....	11 p.m.-6 a.m.	181-188	230	205	218	222	215	215	206	.16
28.....	10 p.m.-5 a.m.	204-211	226	198	218	216	213	210	205	.20
29.....	10 p.m.-6 a.m.	228-236	230	198	218	219	212	213	206	.20
30.....	10 p.m.-7 a.m.	252-261	230	197	217	219	213	213	206	.22
31.....	10 p.m.-6 a.m.	276-284	230	197	217	219	210	214	204	.30
8/1.....	10 p.m.-6 a.m.	300-308	230	197	217	219	210	213	204	.34
3.....	Midnight-6 a.m.	326-332	230	194	218	220	213	215	206	.25

a/ See figure 4.

Catalyst

The activity of the pelleted catalyst (100Co:100Cu:5ThO_2:2.5U_3O_8:125 diatomaceous earth), 960 liters of which was used in experiment 17, was determined by testing in an electrically heated reactor with $2H_2$:1CO gas. The testing conditions and the analyses of the product are listed in table 8.

4056

TABLE 8. - Catalyst activity

(Catalyst composition = 100Co:10Cu:5ThO_2:2.5U_3O_8:125 diatomaceous earth)

Convertor temperature, °C.	Operating periods	Length of operation, hours	Gas flow, l./hr.	Contraction, percent	Liquid products, ml./m.3			
					H_2O	Diesel oil	Gasoline	Total oils
200.....	1	17.0	3.8	26.5	45	9	19	28
200.....	2	20.0	4.1	76.7	182	68	60	128
200.....	3	23.0	3.9	73.3	179	69	63	132
200.....	4	23.0	4.0	69.6	162	61	55	116
210.....	1	17.0	3.9	75.3	159	33	31	64
210.....	2	20.0	3.9	76.5	180	55	52	107
210.....	3	23.0	3.9	74.6	178	56	55	111
210.....	4	23.0	3.8	72.6	169	49	60	109
210.....	5	23.0	3.9	68.8	161	45	56	101
210.....	6	23.0	3.9	64.6	148	38	59	97
210.....	7	23.0	4.3	60.0	136	36	53	89
215.....	1	17.0	3.7	75.8	166	37	52	89
215.....	2	20.0	4.0	75.9	183	49	62	111
215.....	3	23.0	4.2	72.4	166	45	57	102

Synthesis Operation

At 8:00 a.m. on July 17, the production and purification of synthesis gas was begun. At 2:00 a.m. on July 18, when the organic sulfur content was less than 0.07 gm./100 m. of synthesis gas, the Lamont boiler was placed in operation to supply heat to the reaction furnace, and synthesis gas was directed through the furnace at a velocity of 100 m.3/hr. The temperature of the catalyst charge was raised slowly until, at 10:00 a.m. on July 19, an apparent contraction of 14.8 percent was obtained at 195° C.; 12 hours later an apparent contraction of 21.5 percent was obtained at 200° C., and, after a subsequent 12-hour period, 46.2 percent was obtained at 201° C. This point (10:00 a.m., July 20) was considered as zero time in computing the operating life of the experiment; 202 l. of water, 5 l. of Diesel oil, 33 l. of gasoline, 17 m.3 of gaseous hydrocarbons, and no paraffin having been produced up to this time, the reduction of the catalyst was now considered complete.

From this point on, during the operating life of the experiment, the convertor temperature and the gas flow rate were measured every hour; samples of the synthesis gas and the gaseous hydrocarbon products were taken for analysis every 2 hours. The instrument panel is shown in figure 29. The activated carbon-adsorption chambers were alternated every 24 hours, and the adsorbed products were recovered. At this time the total production was determined; paraffins, Diesel oil, and gasoline were stored in tanks, and gasol was stored in a gasholder.

4056

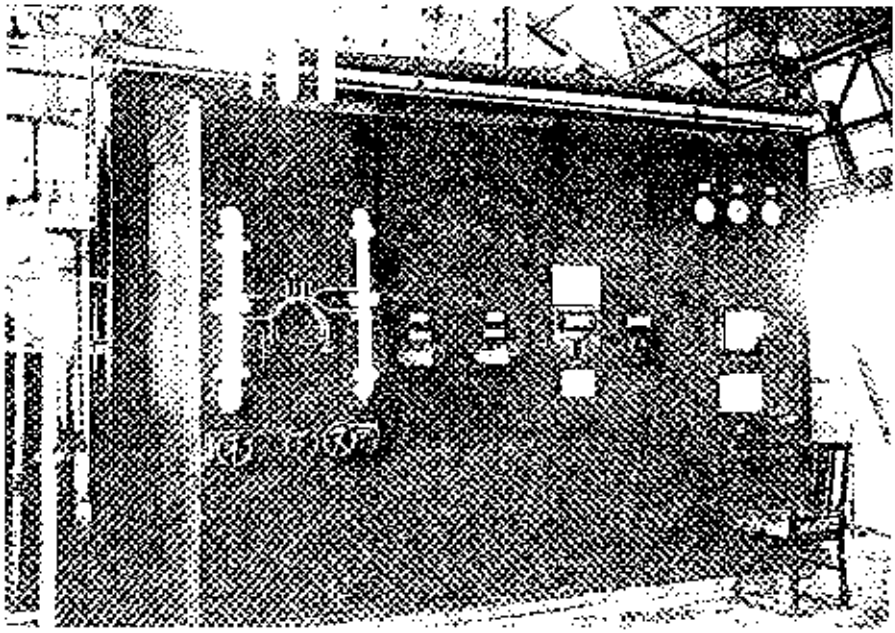

Figure 29. - Instrument panel.

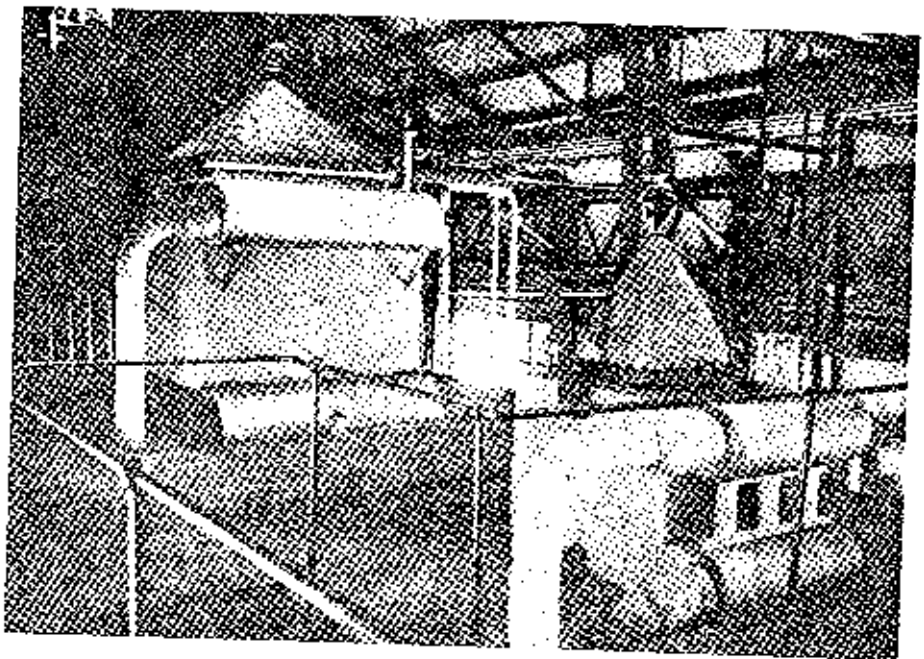

Figure 30. - Water-cooled reactors: foreground, 6 cubic meter per hour unit; background, 100 cubic meter per hour unit.

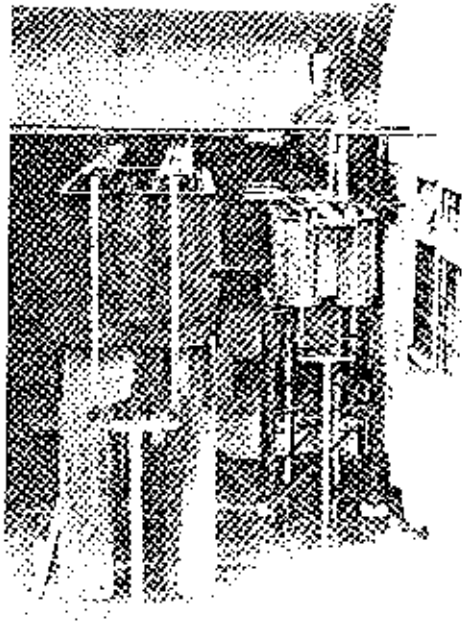

Figure 31. - Heat exchangers: left, Diesel-oil cooler; right, gasoline cooler.

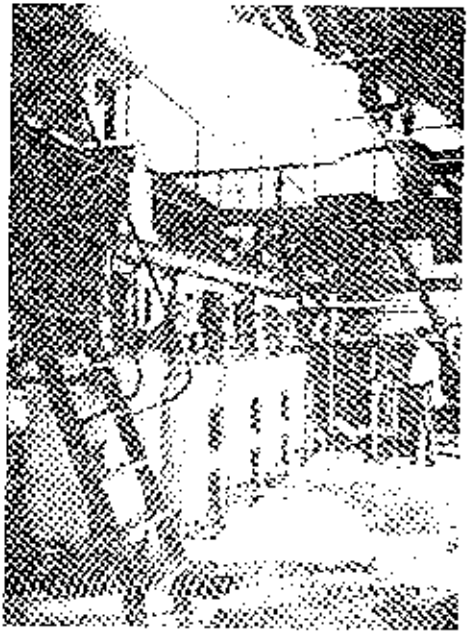

Figure 32. - Foreground, Diesel-oil separators; background, activated-carbon tower for adsorbing light oil.