Table 5.1-19

CATALYTIC COAL GASIFICATION
GASIFIER PRESSURE SCREENING STUDY
GAS COST COMPARISON

Basis:
- January, 1978 Instant Plant, Eastern Illinois Location
- 90% Capacity Factor
- Economic Basis Consistent with CCG Study Design
- Net SNG Rate: Adjusted CCG Study Design = 261.3 GBtu/SD
  Gasifier Pressure Study = 260.3 GBtu/SD
- Same Solids Properties in Both Cases

	SNG Cost Breakdown, $/MBtu	
	Adjusted CCG Study Design at 500 psia (1)	Gasifier Pressure Study at 300 psia
• Coal		
- To Gasifiers	1.109	1.113
- To Coal Dryer Fuel	0.057	0.058
- To Offsite Boilers	0.220	0.232
SUBTOTAL	1.386	1.403
• Major Chemicals		
- KOH (30 wt% Contained)	0.568	0.570
- Lime (97% CaO)	0.040	0.042
- Flocculant	0.029	0.029
SUBTOTAL	0.637	0.641
• Other Operating Costs		
- Purchased Electric Power	0.315	0.363
- Raw Water	0.004	0.004
- Other Catalyst and Chemicals	0.045	0.044
- Wages and Benefits	0.245	0.248
- Salaries and Benefits	0.076	0.080
- Labor Overheads	0.064	0.066
- Materials	0.569	0.580
- Waste Solids Disposal	0.040	0.040
SUBTOTAL	1.358	1.425
• By-Product Revenues		
- Ammonia (20% Contained)	(0.141)	(0.142)
- Sulfur	(0.031)	(0.031)
SUBTOTAL	(0.172)	(0.173)
• Capital Charges	2.953	2.989
TOTAL SUBSTITUTE NATURAL GAS COST	6.162	6.289
% CHANGE IN GAS COST	Base	+2.1%

Note:

(1) CCG Study Design adjusted for improved gas separations and for catalyst recovery via water wash with solid-liquid separations using rotary drum filters.

Table 5.1-20

MATERIAL AND ENERGY BALANCE COMPARISON OF THE STUDY DESIGN WITH CASES WITH 30°F AND 70°F APPROACH TO METHANATION EQUILIBRIUM

Basis:
- 14,490 ST/SD Coal Feed to Gasifiers
- 1275°F Gasifier Temperature
- 500 psia Gasifier Pressure

	Study Design	30°F Case	70°F Case
Approach to Methanation Equilibrium, °F	5	30	70
Gasifier Effluent Rate, moles/hr	159,000	187,300	211,300
Recycle Gas Rate, moles/hr	57,600	73,100	92,400
Total Gasifier Steam Requirement, moles/hr	87,600	100,300	105,000
Steam Conversion, %	42.6	36.2	32.0
Normal Fired Heater COT, °F	1541	1498	1473
Fired Heater Duty, MBtu/hr	485	513	535
Net SNG, GBtu/SD	256.9	255.7	254.8
Change in Net SNG, %	Base	-0.5	-0.8
Gasification Equilibrium Constant, atm	1.41	1.41	1.83
Multiple of Steam/Graphite Equilibrium Constant	1.0	1.0	1.3
Relative Gasifier Volume	Base	1.11	1.62

Table 5.1-20 shows that the recycle stream increased by 27% for the 30°F case and 61% for the 70°F case over the Study Design. The gasifier effluent and steam requirement also showed increases over the Study Design. The preheat fired heater duty increased and the coil outlet temperature (COT) decreased compared to the Study Design for both the 30°F and 70°F cases.

Table 5.1-21 compares the investments of the CCG Study Design with those of the 30°F and 70°F cases. The investment for the 30°F case increased by 68 M$ over the Study Design. The increase was due to the reactor system, product gas cooling and scrubbing, acid gas removal, and steam generation. All the increases were attributable to the increased gas rates required with a 30°F approach to methanation equilibrium. The investments for the 70°F case increased by 190 M$. Again these increases are due to the reactor system, product gas cooling and scrubbing, acid gas removal, and steam generation. The sizes of the increases are approximately double those of the 30°F case with the exception of the gasifier. Since higher steam conversion was specified for the 70°F case, the gasifier size increased accordingly. When this effect was coupled with the increased gas rates, the gasifier investment increased 58 M$ over the Study Design compared with the 30°F case increase of only 11 M$.

Table 5.1-22 presents the gas costs for the two cases compared to the Study Design. The 30°F case gas cost increased by 4% while the 70°F case gas cost increased by 11% over the Study Design. Both these increases are mainly attributable to the increases in investment.

The tradeoff between gasifier volume and steam rate mentioned above suggests that there is an optimum steam conversion (with minimum gas cost) for each possible methanation approach. Screening quality material and energy balances, utilities, investments, and gas costs were developed for a range of steam conversions at methanation approaches of 5°F, 30°F, and 70°F. The gas costs are shown in Figure 5.1-8 plotted against the multiple of the steam-graphite equilibrium constant. As can be seen from the figure, there is a different optimum steam conversion for each methanation approach and the optimum is more pronounced at slower methanation rates.

The table below compares the gas cost at steam-graphite equilibrium with the gas cost at optimum steam conversion for several methanation approach.

	Gas Cost			
	Steam-Graphite Equilibrium		Optimum Steam Conversion	
Methanation Approach	$/MBtu	Relative	$/MBtu	Relative
5°F	6.18	1.00	6.11	0.99
30°F	6.43	1.04	6.33	1.03
70°F	7.09	1.15	6.78	1.10

Table 5.1-21

INVESTMENT COMPARISON OF THE STUDY DESIGN WITH THE 30°F APPROACH TO METHANATION EQUILIBRIUM CASE AND THE 70°F APPROACH (1.3 x K_G) CASE

Basis:
- January, 1978 Instant Plant, Eastern Illinois Location
- 14,490 ST/SD Coal to Process
- 25% Project Contingency
- 25% Process Development Allowance on Onsites

	Investment, M$		
	CCG Study Design	30°F Case	70°F Case
Onsites			
Coal Drying/Catalyst Addition	56	56	56
Reactor System ex. Preheat Fired Heaters	182	193	240
Preheat Fired Heaters	64	53	50
Product Gas Cooling and Scrubbing	107	123	137
Sour Water Stripping/NH_3 Recovery	25	28	29
Acid Gas Removal/Sulfur Recovery	202	215	233
Methane Recovery/Refrigeration	94	96	98
Catalyst Recovery	49	49	49
Common Facilities	69	69	69
SUBTOTAL	848	882	961
Materials Handling			
Coal/Coke Handling	30	31	33
Chemicals Receipt and Storage	25	26	28
By-Products Storage and Shipping	4	4	4
Waste Solids Handling and Disposal	34	34	35
SUBTOTAL	93	95	100
Utilities			
Raw Water/BFW Treating	36	38	39
Steam Generation and Distribution	150	165	180
Flue Gas Desulfurization	64	67	70
Cooling Water	12	12	12
Electric Power Distribution	28	30	30
Miscellaneous Utilities	6	7	8
SUBTOTAL	296	319	339
General Offsites			
Wastewater Treatment	60	63	64
Safety and Fire Protection	16	17	17
Miscellaneous Offsites	50	50	50
SUBTOTAL	126	130	131
TOTAL EX. PDA	1,363	1,425	1,531
PROCESS DEVELOPMENT ALLOWANCE	169	176	192
TOTAL ERECTED COST	1,532	1,601	1,720
CALL	1,530	1,600	1,720

Table 5.1-22

SNG COST COMPARISON OF THE STUDY DESIGN WITH THE 30°F APPROACH TO METHANATION EQUILIBRIUM CASE AND THE 70°F APPROACH (1.3 x K_G) CASE

Basis:
- January, 1978 Instant Plant, Eastern Illinois Location
- 90% Capacity Factor
- Economic Basis Consistent with CCG Study Design
- 256.9 GBtu/SD Net SNG (Study Design)
- 255.7 GBtu/SD Net SNG (30°F Case
- 254.8 GBtu/SD Net SNG (70°F Case)

	SNG Cost Breakdown, $/MBtu		
	CCG Study Design	30°F Case	70°F Case
• Coal			
- To Gasifiers	1.128	1.133	1.137
- To Coal Dryer Fuel	0.055	0.056	0.056
- To Offsite Boilers	0.230	0.260	0.290
SUBTOTAL	1.413	1.449	1.483
• Major Chemicals			
- KOH (30 wt% Contained)	0.221	0.222	0.223
- Lime (97% CaO)			
+ To Catalyst Recovery	0.153	0.153	0.154
+ To FGDS	0.041	0.047	0.052
SUBTOTAL	0.415	0.422	0.429
• Other Operating Costs			
- Purchased Electric Power	0.343	0.354	0.367
- Raw Water	0.005	0.005	0.006
- Other Catalysts and Chemicals	0.055	0.062	0.063
- Wages and Benefits	0.244	0.253	0.258
- Salaries and Benefits	0.077	0.080	0.087
- Labor Overheads and Supplies	0.064	0.066	0.069
- Materials and Overheads	0.598	0.629	0.678
- Waste Solids Disposal	0.033	0.033	0.034
SUBTOTAL	1.420	1.482	1.572
• By-Product Revenues			
- Ammonia (20 wt% Contained)	(0.144)	(0.145)	(0.145)
- Sulfur	(0.031)	(0.032)	(0.032)
SUBTOTAL	(0.175)	(0.177)	(0.177)
• Capital Charges	3.104	3.269	3.540
TOTAL SUBSTITUTE NATURAL GAS COST	6.177	6.445	6.847
CALL	6.18	6.45	6.85
% CHANGE IN GAS COST	Base	+4.4%	+10.8%

FIGURE 5.1-8

GAS COST vs. MULTIPLE OF STEAM-GRAPHITE EQUILIBRIUM CONSTANT

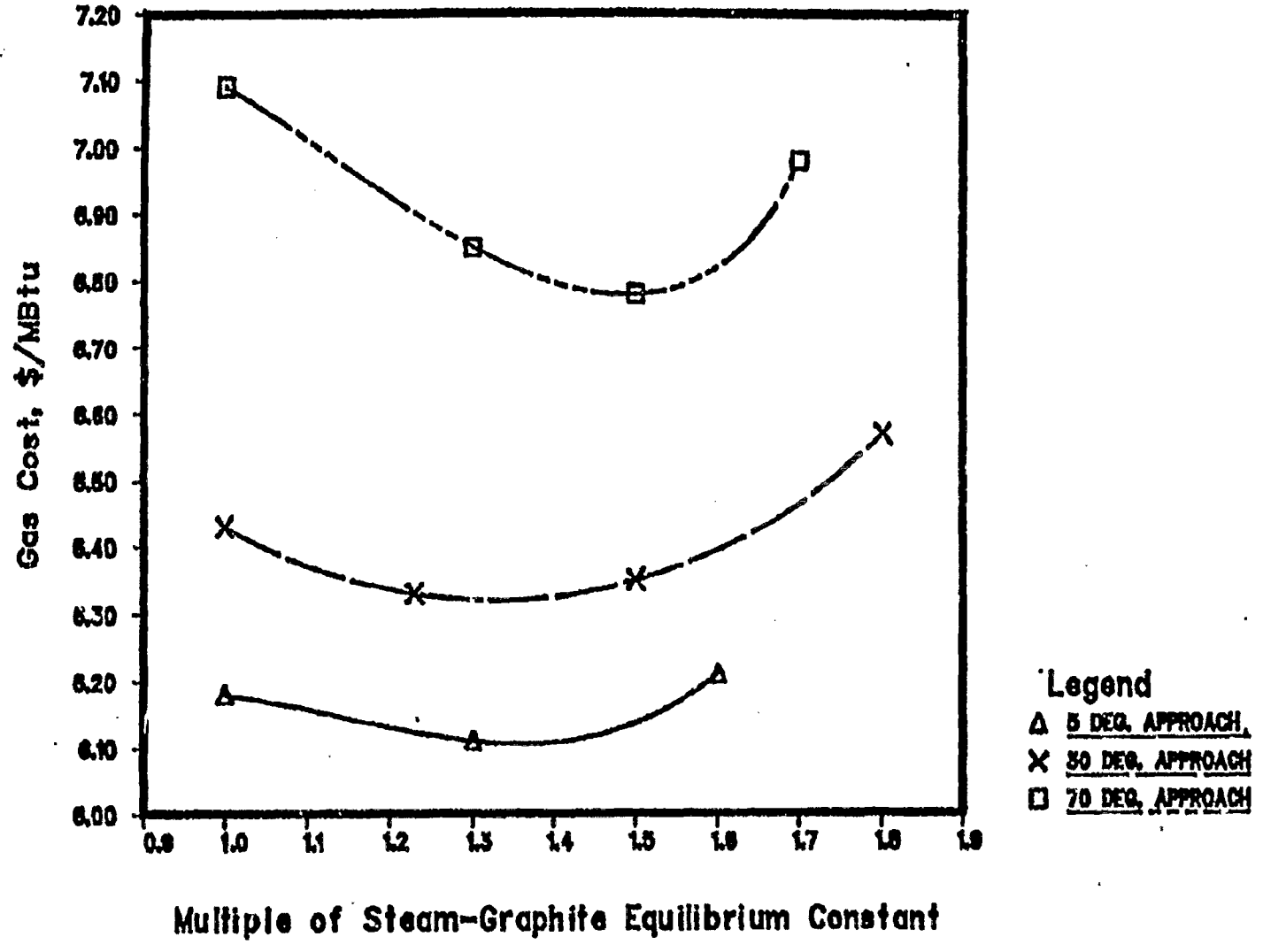

These results are rough, first-pass laboratory guidance studies and can be reworked in greater detail as more PDU data become available and as the gasifier model is updated to reflect additional bench and PDU data.

5.1.14 Impacts of Updated Catalyst Forms on CCG Reactor System Material and Energy Balance (G. B. Raupp, H. A. Marshall)

As part of the catalyst recovery screening studies (described elsewhere in this report), the basis for the catalyst forms material balance was updated. Some significant changes were made from the basis used in the earlier CCG Study Design. In addition, the CCG gasifier system material and energy balance model (see Section 5.2) included some revisions to the enthalpies of catalyst forms and char solids. In order to quantify the impact of these changes on the commercial CCG process, a series of reactor system material and energy balances were carried out. The results of these balances are summarized in Table 5.1-23.

The first two columns of the table show the impact of the revisions in the enthalpies of catalyst forms and char solids. The effect is very small: a slight increase in preheat fired heater outlet temperature and duty and a resultant decrease in net SNG product.

The remaining cases in Table 5.1-23 are all based on the catalyst forms balance for Case 2 of the catalyst recovery screening studies, Water Wash with Filters. (The other water wash cases also have similar catalyst forms balances.) Uncertainties in the amount of potassium carbonate (K_2CO_3) leaving the gasifier and the hydration heat of K_2CO_3 entering the gasifier are reflected in four separate sub-cases. If no free K_2CO_3 is present in the solids leaving the gasifier, the updated catalyst forms basis results in a reduction in the net SNG yield of 1.8% relative to the Study Design. This case also suffers from increases in preheat fired heater outlet temperature and duty.

The principal cause of these changes is reduced oxygen content of the solids leaving the gasifier in Case 2. In the Study Design, it was assumed that potassium carbonate catalyst would react with char in a way which "fixed" organic oxygen in an "active complex" in the char solids:

$$K_2CO_3 + 2HO\cdot Char \rightarrow 2KO\cdot Char + CO_2 + H_2O$$

More recently in Case 2, it was assumed that the reaction to form the "active complex" would not involve oxygen tie up:

$$K_2CO_3 + 2H\text{-}Char \rightarrow 2K\cdot Char + CO_2 + H_2O$$

In this case, the coal feed starts with the same amount of organic oxygen but essentially all of this oxygen ends up in the gasifier products. The effect of this increase in the oxygen going to gasification products is

Table 5.1-23

KEY IMPACTS OF UPDATED CATALYST FORMS
ON CCG REACTOR SYSTEM MATERIAL AND ENERGY BALANCE

BASIS:
- Coal Feed Rate: 14,490 ST/SD (Wet)
- Gasifier Conditions: 500 psia, 1275°F

	CCG Study Design Basis		Catalyst Recovery Screening Case 2 Basis(1)			
	Original Model	New Model	0% K_2CO_3	20% K_2CO_3	50% K_2CO_3	50% K_2CO_3 With Hydration(2)
Gross SNG Product, GBtu/SD (HHV)	271.9	271.9	267.7	268.2	269.0	269.0
Net SNG Product, GBtu/SD (HHV)	256.9	256.7	252.3	253.5	255.3	254.9
Change in Net SNG Product, % of Base Product	Base	-0.1	-1.8	-1.3	-0.6	-0.8
Steam Requirement, lb-mole/hr	87,800	87,800	87,000	86,900	86,500	86,500
Recycle Gas Rate, lb-mole/hr	57,600	57,600	57,400	57,200	57,000	57,000
Normal Preheat Fired Heater Coil Outlet Temperature, °F	1543	1546	1560	1544	1520	1529
Preheat Fired Heater Heat Absorbed, MBtu/hr	485	490	510	485	450	460

Notes:

(1) "% K_2CO_3" refers to percentage of total potassium leaving gasifier as K_2CO_3.
(2) Assumes potassium carbonate in gasifier feed is hydrated as $K_2CO_3 \cdot 1.5H_2O(s)$.

significant: for every four atoms of oxygen added to the product gas, one mole of methane yield (SNG) is lost. It is as if the following reaction is taking place:

$$4\ O_{Char} + CH_4 \rightarrow CO_2 + 2H_2O$$

Thus, in order to develop an accurate gasifier material and energy balance, it is important to measure with reasonable accuracy the amounts of oxygen entering with the feed coal and leaving with the spent solids. Since the oxygen contents of coal and char are obtained by difference, this is difficult.

The amount of potassium leaving the gasifier in the form of free K_2CO_3 is another key uncertainty which can have a significant impact on the material and energy balance. Data available when the Case 2 basis was set indicated that about 20% of the potassium would be in the form of free K_2CO_3 leaving the gasifier. Additional data on catalyst forms from the PDU showed up to 50% or more as K_2CO_3. As Table 5.1-23 illustrates, if K_2CO_3 makes up 50% of the total potassium leaving the gasifier, the reduction in net SNG yield relative to the Study Design is only 0.6%. Furthermore, preheat fired heater outlet temperature and duty actually drop well below the Study Design values. In these balances, it was assumed that the percentage of K·Char decreases as the percentage of K_2CO_3 increases. In effect, the gasifier material and energy balance is modified by the following reaction:

$$2K\cdot Char + CO_2 + H_2O \rightarrow K_2CO_3 + 2H\cdot Char$$

Because this reaction is exothermic, the gasifier heat input requirement decreases as the amount of K_2CO_3 increases, reducing the amount of SNG used as heater fuel. Also, because this reaction adds hydrogen in the char, the gross SNG product is increased. Both factors contribute to the higher net SNG yield.

The final column in Table 5.1-23 shows the potential impact of the heat of hydration of K_2CO_3 in the feed coal plus catalyst entering the gasifier. It was assumed for this calculation that potassium carbonate in the feed is present as $K_2CO_3 \cdot 1.5\ H_2O_{(s)}$. In all other respects, the basis is unchanged from the column immediately to the left. The extra heat required to decompose the hydrate adds 10 MBtu/hr to the preheat fired heater duty and reduces the net SNG yield slightly. Hydration of other feed catalyst forms in addition to K_2CO_3 could nearly double this impact.

One other key uncertainty in the CCG gasifier material and energy balance which is not specifically addressed in Table 5.1-23 is the feed coal heating value. If the heating value of the feed coal increases, the gasifier heat input requirement decreases, and vice versa. An error of only 0.5% in the feed coal heat of combustion, predicted by the Mott-Spooner correlation in the CCG reactor system material and energy balance model

(reference cited in Section 5.2.2), would change the preheat fired heater duty by over 50 MBtu/hr (and change net SNG yield by over 1.3 GBtu/SD). For commercial design purposes, it will probably be necessary to provide sufficient flexibility in the heat input facilities to allow for changes in gasifier heat requirement of at least this magnitude.

5.1.15 Incentive Study for Removing Methane from Recycle Gas

A brief screening study was carried out to determine whether there is an incentive for reducing the methane content of the gas stream recycled to the catalytic gasifier. In the CCG Study Design the recycle gas contained 10 mole % methane. This was thought to be the lowest methane content in the recycle gas that could be practically achieved with a cascade refrigeration system consisting of propylene, ethylene, and methane loops. Lower methane content would require lower temperatures and the addition of a nitrogen refrigerant loop to the cascade.

The effect of removing methane from the recycle gas was simulated using a material and energy balance program for catalytic coal gasification. The process basis and conditions were identical to the CCG Study Design except for the removal of all the methane from the recycle gas stream. The design changes required in the cryogenic methane recovery system were not evaluated at this time. The key differences between the "no methane in recycle gas" case and the CCG Study Design are listed in Table 5.1-24 and summarized below:

- Total recycle gas rate reduced by 17%.
- Raw gasifier effluent gas rate reduced by 8%.
- Feed to methane recovery tower reduced by 11%.
- Preheat fired heater fuel fired down by 6%.
- Overall net methane product increased by 0.2%.
- Offsite steam requirement reduced by 6.8%.
- Feed to acid gas removal reduced by 9%.
- Gasifier volume reduced by 4%.

Although the preheat fired heater duty requirement to heat balance the gasifier was lower in the "no methane in recycle gas" case, the heater coil outlet temperature was calculated to be 32°F higher. This is due to the steam/recycle gas rate being about 10% lower than in the Study Design.

Table 5.1-24

SUMMARY OF SCREENING STUDY FOR REMOVAL OF CH_4 IN CCG RECYCLE GAS

Study Design Base Case - 10% CH_4 in Recycle Gas
Incentive Study-0% CH_4 in Recycle Gas

	Base Case(1)	No CH_4 in Recycle Gas	% Change
Gasifier Temperature, °F	1,275	1,275	--
Coal Feed to Gasifier, ST/SD	14,490	14,490	—
Plant Rates and Operating Conditions			
Net CH_4 Product, lb moles/hr	27,973	28,015	+ 0.2
Total Recycle Gas, lb moles/hr	57,200	47,500	-17
Gasifier Steam/Recycle Gas, lb moles/hr	131,000	117,200	-11
Raw Gasifier Product, lb moles/hr	164,800	151,000	-8
Acid Gas Removal Feed, lb moles/hr	110,400	100,400	-9
Methane Recovery Feed, lb moles/hr	87,100	77,200	-11
Normal Preheat Fired Heater COT, °F	1,543	1,575	+32°F
Preheat Fired Heater Fuel Fired, MBtu/hr	530	500	-6
Steam Consumption, lb moles/hr(2)	38,900	37,500	-4
Steam Conversion,%	41	42	+2
Overall Net CH_4 Product, G Btu/SD	257.0	257.4	+0.2
Steam Generated Offsite, lb moles/hr	59,300	55,300	-7
Relative Gasifier Volume	100	96	-4

Notes:

(1) Base case refers to CCG Study Design completed in the Predevelopment Program and documented in the Final Report FE-2369-24.
(2) Steam consumption = steam in preheat fired heater inlet + water with coal + cooling steam - steam in reactor effluent.

In the methane recovery section of the plant, more refrigeration would be required to reduce the methane content of the recycle gas stream. This would require greater investment and operating cost in that section.

Overall, it was concluded that there are incentives for reducing the methane content of the recycle gas stream.

5.1.16 Gas Separation Screening Study

A unique part of the Catalytic Coal Gasification process is the methane recovery system where product methane (SNG) is separated from a recycle stream consisting mainly of CO and H_2. Prior to this separation, it is necessary to remove components that could freeze at low temperature. After bulk removal of H_2S and CO_2 in a selective heavy glycol solvent absorption system, trace components are removed by adsorption on activated carbon and molecular sieves. The clean gas is then fed to methane recovery.

In the CCG Study Design, information supplied by a vendor was used for design of the acid gas removal system. The information was of screening quality and was not optimized for the specific application to CCG. The methane recovery separation was made using cryogenic distillation. The system specified in the Study Design was based on Exxon work prior to the Predevelopment Contract E(49-18)-2369. In this work, a detailed and optimized study design was developed for one methane recovery process configuration. Time did not permit detailed consideration of other process configurations.

The objective of the gas separation screening study was to develop an optimized process basis for these sections of the CCG process. This effort was based on the work done by Air Products and Chemicals, Inc. of Allentown, Pennsylvania under DOE contract ET-78-C-01-3044. The objective of that contract was to recommend the most attractive combination of acid gas removal and cryogenic methane separation for the CCG process. The information developed by Air Products was assessed and assimilated into the mainstream of the CCG process development.

A flow scheme for the Methane Recovery System included in the CCG Study Design is presented in Figure 5.1-9. In this system methane is recovered via cryogenic distillation using external cascade refrigeration cycles. Treated and dried feed gas at approximately 420 psia and 5°F is cooled in the feed/product exchanger before entering the Methane Recovery Tower. In this tower CO and H_2 are separated from CH_4 by cryogenic distillation at about 410 psia. The main condenser duty is supplied by a cascade refrigeration system consisting of propylene, ethylene, and methane refrigeration cycles. The reboiler duty is provided by condensing a portion of compressed methane refrigerant. The tower overhead vapor is warmed in the feed/product

FIGURE 5.1-9

METHANE RECOVERY VIA CRYOGENIC DISTILLATION

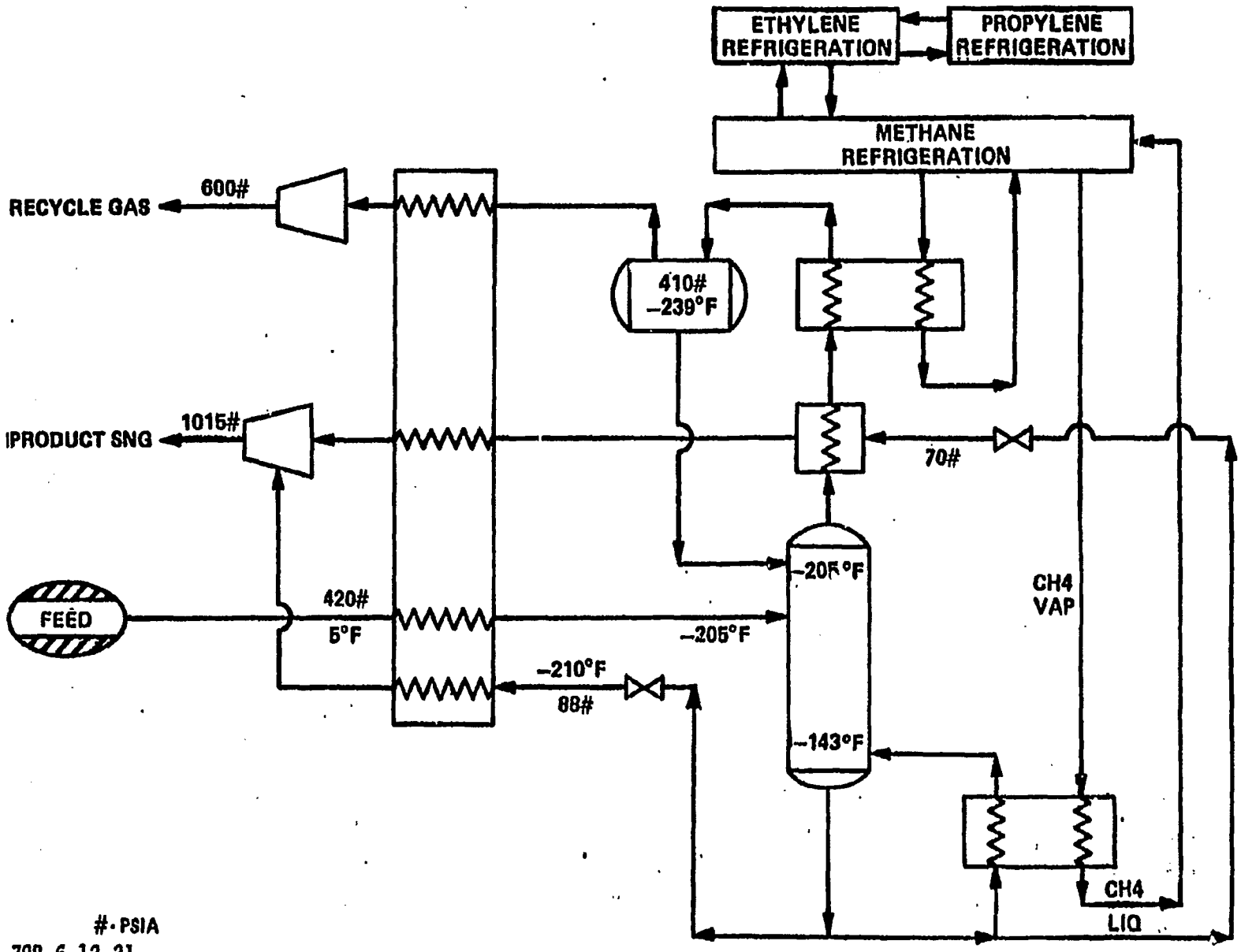

#-PSIA

79R-6-12-31

exchanger, compressed and sent to the gasifier. The product methane bottoms is flashed to low pressure (88 psia and 70 psia) to supply feed refrigeration and part of the condenser duty. The vaporized bottoms is then compressed to pipeline conditions.

The flow scheme for the alternative Methane Recovery System proposed by Air Products is illustrated in Figure 5.1-10. In this system, methane separation is achieved by autorefrigeration of feed gas followed by stripping of CO and H_2 at low pressure. Treated and dried feed gas at approximately 420 psia and 5°F is cooled and partially condensed in the main exchanger. The cooled vapor portion is rich in CO and H_2 and is withdrawn from the separator drum at 390 psia. The resulting liquid is let down in pressure to 40 psia and fed to the CO stripper to remove dissolved CO and H_2. The stripper overhead vapor and the vapor withdrawn from the separator drum are warmed in the main exchanger, compressed, and sent to the gasifier as recycle gas. Evaporation of the stripper bottoms (CH_4) provides the required refrigeration to cool the feed in the main exchanger and reboiler. A portion of the bottoms methane entering the main exchanger is let down to near atmospheric pressure to supply the cold-end duty at the required temperature level. The remaining portion is pumped to about 80 psia so that the vaporization temperature closely matches the feed cooling curve at the warm end. The warmed SNG streams are compressed to product pressure.

Advantages for this system relative to the Study Design Methane Recovery System are as follows:

- Separation of CH_4 from CO/H_2 is easier at low pressure due to greater CO/CH_4 relative volatility.
- Most of the CO and H_2 are separated from the product methane by simple cooling and a separator drum without having to be fed to the cryogenic low pressure stripper. This permits separation of the remaining CO and H_2 at low pressure while minimizing CO and H_2 recompression costs.
- External refrigeration cycles are eliminated resulting in a simpler process configuration.

A screening study was conducted to make a consistent comparison between the two systems. The first step in this work was to develop material and energy balances for the two systems on a consistent basis. A horsepower estimate was developed for the alternative methane recovery scheme and is compared below to the horsepower estimate for the Study Design system.

FIGURE 5.1-10

METHANE RECOVERY VIA LOW PRESSURE CO STRIPPING

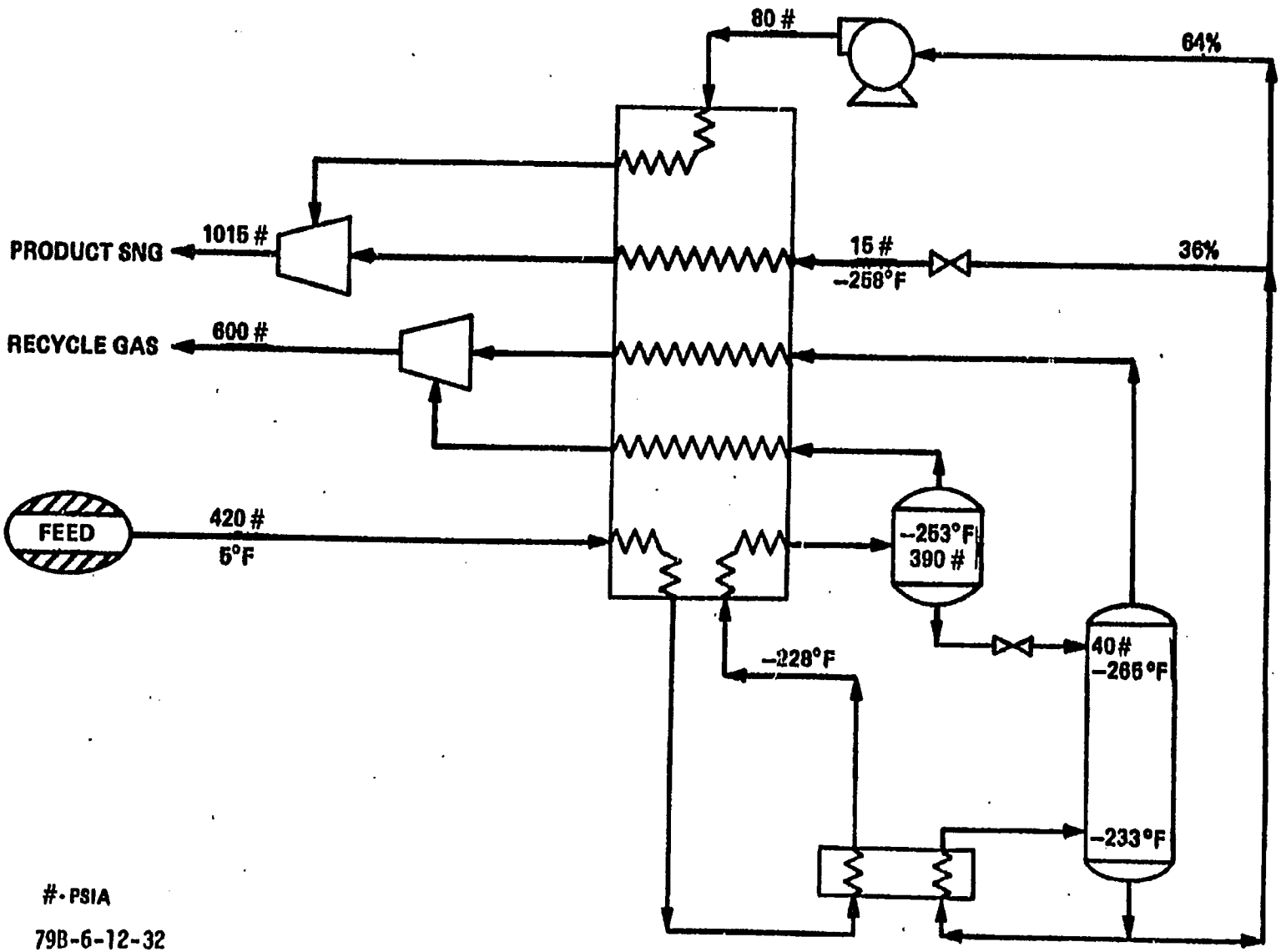

GAS SEPARATION SCREENING STUDIES
MATERIAL AND ENERGY BALANCE COMPARISON

	Base CCG Study Design	Alternative CH_4 Recovery System
Tower Pressure, psia	410	40
Percent CO and H_2 Bypassing Tower	-	85
Number of Trays	30	10
Tower Diameter (one of two trains), ft	10	10
Reboiler Duty, MBtu/hr	66	34
Total Refrigeration Compression, HP	65,000	-
Recycle Gas Compression, HP	17,000	36,000
Product Gas Compression, HP	56,000	66,000
Total Compression, HP	138,000	102,000

The horsepower requirement for the alternative methane recovery system is 26% lower than that for the Study Design system. The CCG Study Design includes some allowance for heat leak into the system. The horsepower for the alternative methane recovery system shown here does not include an allowance for heat leak. It is expected that heat leak will not significantly increase system horsepower requirements.

In addition to the substantial horsepower savings, the low pressure stripping system has a lower investment than the Study Design system as indicated by the reduced number of trays and design pressure for the tower and elimination of the entire cascade refrigeration system.

The results of the study show a gas cost of 5.79 $/MBtu, a 6% savings over the CCG Study Design gas cost of 6.18 $/MBtu (as reported earlier in this report. The main factor contributing to this savings was a reduction in plant investment of 100 M$, to 1430 M$. As shown in Table 5.1-25, almost all of this investment savings is directly related to the lower investments for the two improved sections. Table 5.1-26 shows a breakdown of the gas cost. Next in importance to the investment savings for this study was the increase in net SNG product from 257 to 261 GBtu/SD. This increase is due mainly to lower product losses in Acid Gas Removal. Finally, lower operating costs also accounted for some of the savings for this study.

A study was also performed to evaluate the combined effect of the Improved Gas Separation Study and Catalyst Recovery Screening Studies Case 2 (in which the solid/liquid separation technique is rotary drum filters). The results of this study show little net impact on the Study Design gas cost, lowering it from 6.18 to 6.16 $/MBtu. Although the plant investment is decreased 40 M$ to 1490 M$, increased operating costs cancel this savings, causing almost no change in the gas cost.

Table 5.1-25

GAS SEPARATION SCREENING STUDY
INVESTMENT COMPARISON

Basis:
- January, 1978 Instant Plant, Eastern Illinois Location
- 25% Project Contingency
- 25% Process Development Allowance on Onsites

	Investment, M$	
	CCG Study Design	Improved Gas Separation Case
Onsites		
Coal Drying/Catalyst Addition	56	56
Reactor System	246	246
Product Gas Cooling and Scrubbing	107	102
Sour Water Stripping/NH_3 Recovery	25	25
Acid Gas Removal	175	123
Sulfur Recovery	27	20
Methane Recovery/Refrigeration	94	77
Catalyst Recovery	49	49
Common Facilities	69	69
SUBTOTAL	848	767
Materials Handling		
Coal Handling and Storage	24	24
Coke/Char Handling	6	6
Chemicals Receipt and Storage	25	24
By-Products Storage and Shipping	4	4
Waste Solids Handling and Disposal	34	34
SUBTOTAL	93	92
Utilities		
Raw Water/BFW Treating	36	36
Steam Generation and Distribution	150	147
Flue Gas Desulfurization	64	63
Cooling Water	12	12
Electric Power Distribution	28	28
Miscellaneous Utilities	6	6
SUBTOTAL	296	292
General Offsites		
Wastewater Treating	60	61
Safety and Fire Protection	16	16
Miscellaneous Offsites	50	51
SUBTOTAL	126	128
TOTAL EX. PDA	1,363	1,279
PROCESS DEVELOPMENT ALLOWANCE	169	153
TOTAL ERECTED COST	1,532	1,432
CALL	1,530	1,430

Table 5.1-26

GAS SEPARATION SCREENING STUDY
GAS COST COMPARISON

Basis:
- January, 1978 Instant Plant, Eastern Illinois Location
- 90% Capacity Factor
- Economic Basis Consistent with CCG Study Design
- Net SNG Rates: Study Design - 257 GBtu/SD
  Improved Gas Separation - 261 GBtu/SD

	SNG Cost Breakdown, $/MBtu	
	CCG Study Design	Improved Gas Separation Case
• Coal		
- To Gasifiers	1.128	1.109
- To Coal Dryer Fuel	0.055	0.054
- To Offsite Boilers	0.230	0.221
SUBTOTAL	1.413	1.384
• Major Chemicals		
- KOH (30 wt% Contained)	0.221	0.217
- Lime (97% CaO)		
+ To Catalyst Recovery	0.153	0.150
+ To FGDS	0.041	0.040
SUBTOTAL	0.415	0.407
• Other Operating Costs		
- Purchased Electric Power	0.343	0.321
- Raw Water	0.005	0.004
- Other Catalysts and Chemicals	0.056	0.047
- Wages and Benefits	0.244	0.235
- Salaries and Benefits	0.077	0.073
- Labor Overheads and Supplies	0.064	0.062
- Materials and Overheads	0.598	0.550
- Waste Solids Disposal	0.033	0.032
SUBTOTAL	1.420	1.324
• By-Product Revenues		
- Ammonia (20% Contained)	(0.144)	(0.141)
- Sulfur	(0.031)	(0.031)
SUBTOTAL	(0.175)	(0.172)
• Capital Charges	3.104	2.845
TOTAL SUBSTITUTE NATURAL GAS COST	6.18	5.79
% CHANGE IN GAS COST	Base	-6.3%

5.1.17 Assessment of Trace Components in CCG Gas Loop

A study was made to identify and quantify trace components which might be present in the CCG gas loop and to assess their potential impacts on the CCG process. The broad classes of impurities which were considered include light hydrocarbons, nitrogen compounds, sulfur compounds, light and heavy oils, tars, halogen compounds, and components which could combine with these in the gas phase. Potential concerns to be evaluated associated with these impurities include effects on corrosion, fouling, plugging, purge stream balances. cryogenic freezeout, waste water treating and plant emissions.

The levels of trace components assumed for the CCG Study Design and the bases for those levels are presented in Table 5.1-27. In this study, additional potential trace components were identified, as listed in the table. This list provided guidance for efforts to identify and quantify key impurities in the PDU gasifier effluent.

5.1.18 Cryogenic Acid Gas Removal Incentive Study

An engineering screening study was completed which evaluated the economic incentives for using a cryogenic fractionation scheme for acid gas removal in the Catalytic Coal Gasification Process. This study included the definition of the process flow scheme, detailed material and energy balances, design of the required equipment, and development of investment, operating costs and economics for this process concept.

Previous work done under the CCG Predevelopment Contract led to the conclusion that carbon dioxide (CO_2) freeze-out would occur in some part of the acid gas fractionation system over the entire range of possible tower operating conditions. For the current study, it was assumed that the freeze-out problem could be handled in a simple manner within the system. Further work to determine the actual effect of CO_2 freeze-out would be necessary to determine the actual technical feasibility of the proposed scheme.

A simplified block flow diagram of the Cryogenic Acid Gas Removal Scheme is presented in Figure 5.1-11. The scheme incorporates two new distillation towers. In the first tower, the Acid Gas Fractionator (AGF), CO_2 and H_2S are separated from an overhead H_2, CO, and CH_4 stream. The overhead stream is then fed to cryogenic Methane Recovery. The bottoms CO_2 and H_2S stream from the Acid Gas Fractionator is fed to the second tower, the Acid Gas Splitter (AGS), where the overhead is essentially pure CO_2 and the bottoms is an 80/20 mixture of CO_2/H_2S. This bottoms stream is then sent to sulfur recovery. A flow plan showing process operating conditions and major equipment is presented in Figure 5.1-12.

TABLE 5.1-27

ASSESSMENT OF TRACE COMPONENTS IN CCO GAS LOOP

Gasifier Effluent Components	[1] Level in Study Design Gasifier Effluent lb/ST maf Coal	Basis for Study Design	Impacts and Concerns
• Light Hydrocarbons			
Ethane	0.34	Ethane content set by equilibrium; levels of other light hydrocarbons judged to be negligible.	Light hydrocarbons dissolved in solvent used in acid gas removal are vented to the atmosphere. CO_2 vent stream must meet hydrocarbon emission standards.
Propane	-		
Ethylene	-		
Propylene	-		
Acetylene	-		
• Nitrogen Compounds			
Total Nitrogen	200.	Nitrogen is introduced to the gas loop by N_2 generated from coal and N_2 introduced from lock hoppers. It is assumed that 5% of the coal nitrogen goes to N_2 and an equal amount of N_2 enters the gasifier from the lock hopper feed system giving a total of 4.1 lb N_2/ST maf coal to be purged. As a result, nitrogen is built up in the recycle gas. The extent of N_2 buildup is limited by a purge of 2% of the recycle gas to the lock hopper system. This buildup results in 200 lb N_2/ST maf coal recycled to the gasifier.	Buildup of nitrogen in the system sets purge rates and affects plant fuel balance.
Once-Through Nitrogen	4.1		
Ammonia	44.	90% of coal nitrogen goes to NH_3.	Sets the basis for design of the NH_3 recovery facilities and the NH_3 by-product rate.
Hydrogen Cyanide	0.013	Estimated based on FBD sour water analyses.	May impact wastewater treating.
Thiocyanates	0.026		
Ring-substitutes	-		
• Sulfur Compounds			
H_2S	71.	90% of organic coal sulfur goes to H_2S.	Impacts on design basis for acid gas removal, sulfur recovery, and sour water facilities, and sets sulfur by-product rate.
COS	1.9	COS content set by equilibrium.	The heavy glycol solvent of the acid gas removal section is stripped with air to remove CO_2. COS that is present could be oxidized to form S which could cause plugging. Also, COS, if vented, is subject to emission limitations. Upstream of the acid gas removal section 85% of the COS was converted to H_2S.
CS_2	-	Assumed that levels of these components would be small and have negligible impact on plant facilities.	If higher levels, could have impact on sour water treatment, acid gas removal, and molecular sieve systems.
Organic Sulfides	-		
Mercaptans	-		
Thiophenes	-		
Ring-Substitutes	-		
• Organic Liquids			
Benzene	2.8	Nominal value assumed for design of molecular sieve/activated carbon cleanup systems.	Impacts acid gas removal and molecular sieve systems.
Phenols	0.086	Estimated based on FBD sour water analyses.	Impacts sour water treating. May foul high level heat recovery equipment. Could contaminate acid gas removal solvent.
Heavy Oils	0.026		
Tars	-		
• Halogen Compounds			
HCl	-	Assumed not to be present.	May cause corrosion problems. Could react with NH_3 to precipitate NH_4Cl and plug equipment.
• Other Components			
Aluminum	-	Assumed not to be present.	May be present as various compounds such as oxides, chlorides, hydrides, sulfides, sulfates, etc. Probably not a limiting factor in any equipment specification.
Potassium	-		
Sodium	-		
Phosphorous	-		

FIGURE 5.1-11

CRYOGENIC ACID GAS REMOVAL FLOW SCHEME

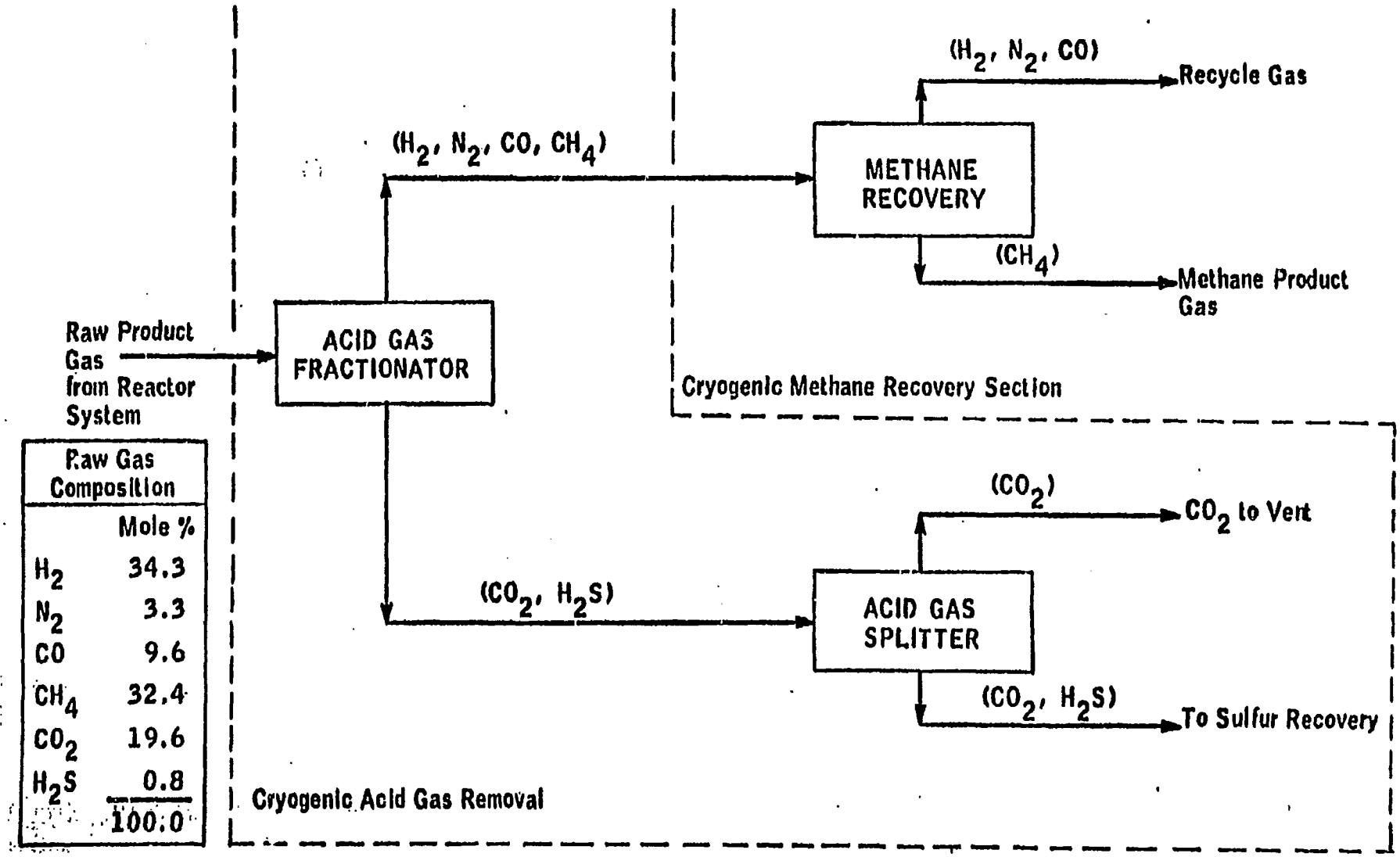

Raw Gas Composition	
	Mole %
H_2	34.3
N_2	3.3
CO	9.6
CH_4	32.4
CO_2	19.6
H_2S	0.8
	100.0

78B-6-11-25

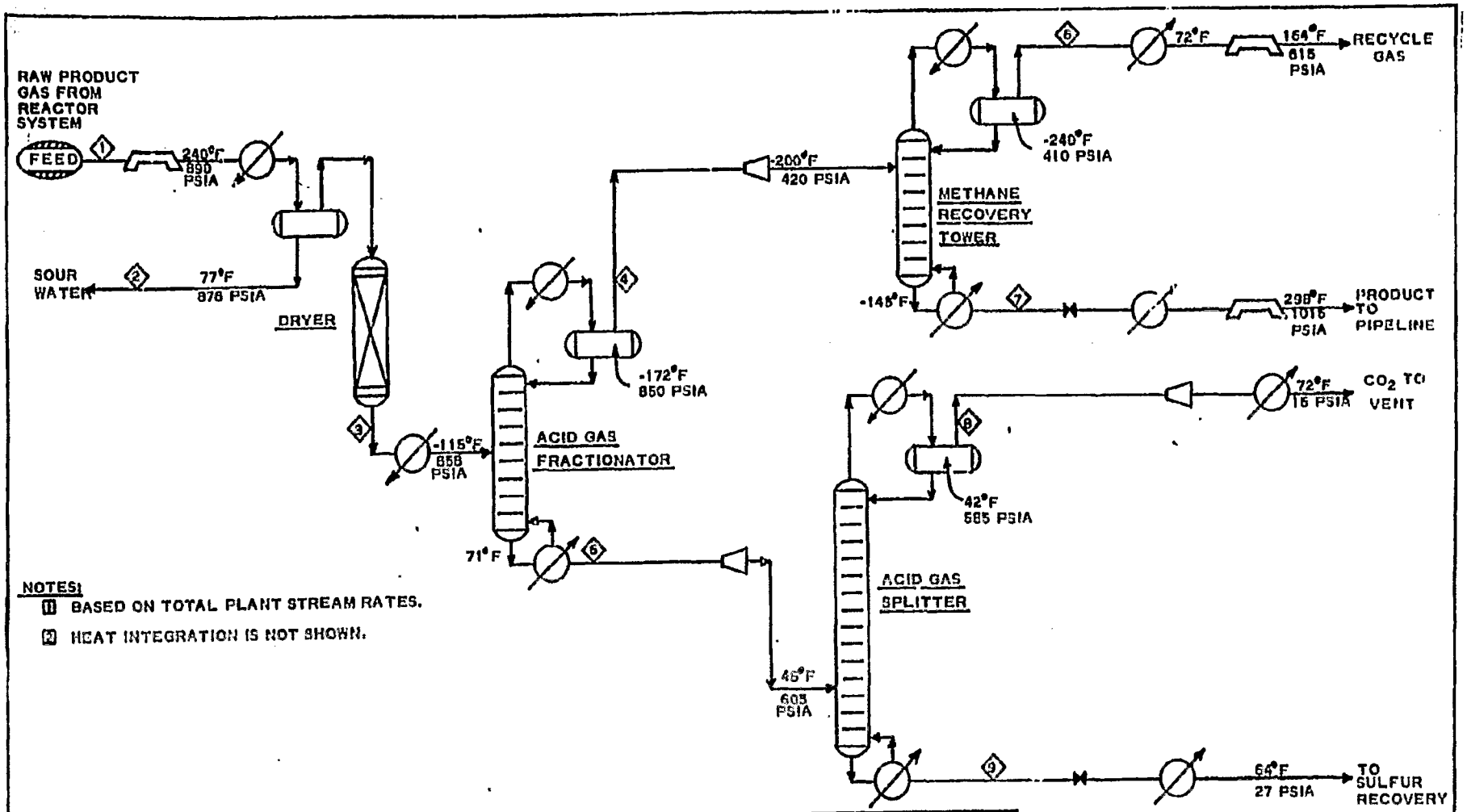

NOTES:

1. BASED ON TOTAL PLANT STREAM RATES.
2. HEAT INTEGRATION IS NOT SHOWN.

STREAM NUMBER	1	2	3	4	5	6	7	8	9
PRESSURE (PSIA)	450	876	866	850	865	410	420	585	606
TEMPERATURE (°F)	100	77	77	-172	72	-240	-143	43	53
FLOWRATES, MPH(1)									
CO	10510		10510	10510		10480	30		
CO_2	21633		21633	13	21620		13	18106	3514
H_2	37671		37671	37671		37671			
H_2O	239	175							
CH_4	35657		35657	35635	22	6760	29835	22	
C_2H_6	5		5		5			4	1
H_2S	878		878		878				878
COS	14		14		14				14
N_2	3585		3585	3585		3585			
TOTAL	110,186	175	109,953	87414	2253.	57486	29928	18132	4407

FIGURE 5.1-12

SIMPLIFIED FLOW PLAN (2)
CRYOGENIC ACID GAS REMOVAL
AND METHANE RECOVERY

During the study, various process conditions, flow schemes, and heat integration/refrigeration options were investigated. The alternatives were compared on the basis of minimizing total system horsepower requirements. This is believed to be the major investment and operating cost parameter in cryogenic systems. The design bases for the three towers involved in the study are described below.

In the Acid Gas Fractionator, an overhead CO_2 concentration of 150 vppm was specified to eliminate the need for molecular sieve adsorption for CO_2 removal upstream of methane recovery. The AGF bottoms specification was set to limit methane losses to 0.1% of the methane fed to the tower. This low level of methane losses is relatively easily achieved and compares to methane losses of about 1% for the heavy glycol solvent absorption system used in the CCG Study Design. The reduced methane losses result in a higher product SNG rate for the cryogenic acid gas removal case compared to the Study Design. Alternative AGF operating pressures were evaluated. High pressure is desirable to increase tower operating temperatures which might minimize the impact of CO_2 freeze-out. Pressures of 1000 psia and 850 psia were evaluated and the lower pressure level provided about a 7% savings in feed/product compression and refrigeration power requirements. AGF feed temperatures between -60°F and -140°F were evaluated and the minimum power requirements were obtained at a feed temperature of about -115°F. This produced a 17% savings versus a feed temperature of -60°F.

The Acid Gas Splitter (AGS) separates a CO_2 overhead product from an 80% CO_2/20% H_2S bottoms product. After energy and refrigeration recovery, the CO_2 stream is vented to the atmosphere. An overhead H_2S concentration of 10 vppm in the CO_2 vent stream was specified, consistent with the Study Design. The H_2S containing bottoms product is fed to a Claus Plant for sulfur recovery. The AGS operating conditions selected enable use of a heat pump loop with propylene refrigerant for both the condenser and reboiler duties. The specification of a lower CO_2 level in the AGS bottoms would require additional stages and/or reboiler duty and would raise the bottoms temperature. This would significantly increase power requirements in the propylene heat pump loop. Cost savings in the Claus plant would be unlikely to offset these debits.

In the Methane Recovery Tower (MRT), a CO/H_2 overhead stream is separated from the CH_4 bottoms product. The tower specifications are consistent with the Study Design (0.1% CO in product methane, 10% CH_4 in the recycle gas). The MRT feed from the AGF overhead is cooled and flashed to 420 psia (the same as in the Study Design). Tower feed temperatures from -198°F to -240°F were evaluated, and -200°F was chosen as the basis. At this condition, expanding the bottoms product provides the entire MRT condenser and feed cooling duty. This stream is also used to help cool the AGF feed.

An effort was made during the study to optimize the heat integration/refrigeration scheme for the process. The final scheme, as shown in Figure 5.1-13, consists of the following:

FIGURE 5.1-13

CRYOGENIC ACID GAS REMOVAL REFRIGERATION AND HEAT INTEGRATION FLOW SCHEME

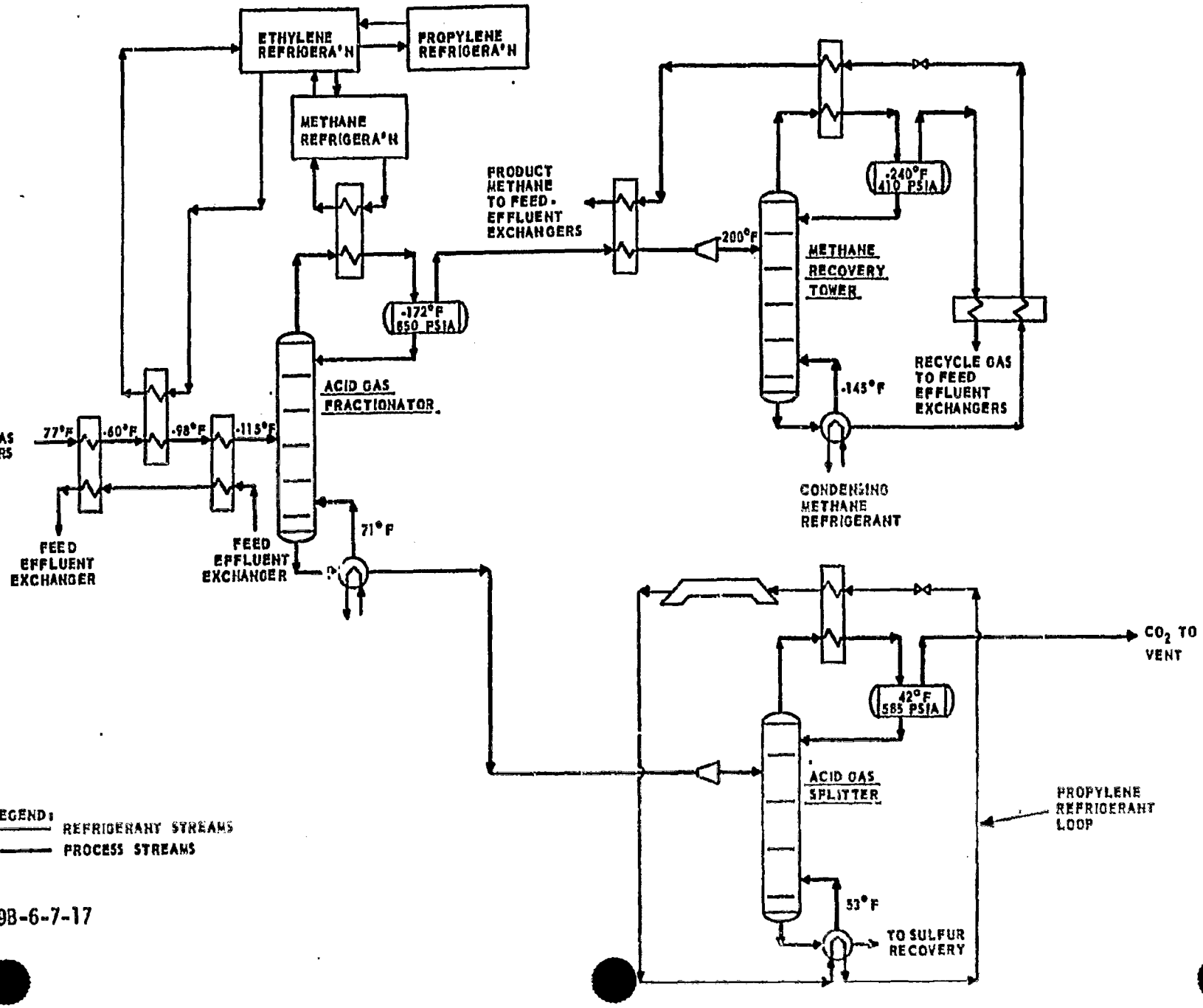

79B-6-7-17

- An external three-level cascade refrigeration system utilizing methane, ethylene and propylene refrigerants provides both the Acid Gas Fractionator condenser duty (-172°F process temperature) and a portion of the feed cooling duty.

- A single heat pump loop of propylene refrigerant accomplishes both the condenser and reboiler duty for the Acid Gas Splitter.

- The overhead stream from the Methane Recovery Tower (MRT) is used to subcool the methane bottoms product. This bottoms stream is then adiabatically expanded to provide the refrigeration requirements for the condenser (-200°F process temperature) and feed cooling of the MRT.

- The remainder of the Acid Gas Fractionator feed cooling is accomplished by feed/effluent heat exchange with the methane product, recycle gas, and CO_2 vent gas.

The utility requirements developed for this system are presented below:

UTILITY REQUIREMENTS

	CCG Study Design	Cryogenic Acid Gas Case
Brake Horsepower	194,000	267,000(1)
AGR Steam (65 psig), klb/hr	415	-
Total Cooling Water, kgpm	79	59

Note: (1) Includes 21,000 HP credit for expanders.

The total brake horsepower requirement for the new system is 38% greater than for the CCG Study Design. Steam requirements for the Acid Gas Removal Section have been completely eliminated in the new scheme, and total plant cooling water requirements have been reduced 25%.

A breakdown of the investment for the Cryogenic Acid Gas Removal Case compared to the Study Design is presented in Table 5.1-28. The investment for the cryogenic acid gas removal section is 59 M$ lower than the Study Design investment for heavy glycol acid gas removal. Investment savings in sulfur recovery, methane recovery and other onsites are balanced by increased investment for refrigeration. The offsite investment in water and steam systems is reduced by 10 M$ because of reduced steam requirements. This is somewhat offset by a 5 M$ investment increase for electric power distribution because of the larger power requirement. Overall, the investment for the cryogenic acid gas removal case is reduced by 100 M$ compared to the Study Design.

Table 5.1-28

CATALYTIC COAL GASIFICATION
CRYOGENIC ACID GAS REMOVAL STUDY

INVESTMENTS

- Basis: Same Coal Feed to Gasifier (14,490 ST/SD) as CCG Study Design

Plant Section	Study Design Base Case (M$)	Cryo. Acid Gas Case (M$)	Change (M$)
Onsites			
Acid Gas Removal	140	81	(59)
Sulfur Recovery	22	19	(3)
Methane Recovery	44	41	(3)
Refrigeration	31	38	7
Other Onsites	442	439	(3)
Onsites Subtotal	679	618	(61)
Offsites			
Water Systems	38	35	(3)
Steam Systems	171	164	(7)
Electric Power Distribution	23	28	5
Other Offsites	179	179	-
Offsites Subtotal	411	406	(5)
Total Direct and Indirect Costs	1,090	1,024	(66)
Process Development Allowance	169	153	(16)
Project Contingency	271	253	(18)
TOTAL ERECTED COST	1,530	1,430	(100)

A breakdown of the gas cost for the Cryogenic Acid Gas Removal Case is presented in Table 5.1-29. A summary of the gas cost for the new case as compared to the Study Design is shown below:

GAS COST SUMMARY

	CCG Study Design	Cryo. Acid Gas
Coal Feed to Gasifier	14,490 ST/SD	14,490 ST/SD
Net SNG Product	257 GBtu/SD	261 GBtu/SD
Plant Investment	1,530 M$	1,430 M$
SNG Cost Components	---------Gas Cost, $/MBtu---------	
Illinois No. 6 Coal	1.41	1.37
Major Chemicals	0.41	0.40
Utilities	0.35	0.51
Other Operating Costs	1.08	1.01
By-Product Revenues	(0.18)	(0.17)
Capital Charges (15% DCF Return)	3.11	2.86
Total SNG Gas Cost (RISP)	6.18	5.98
Savings		3.2%

The total gas cost with cryogenic acid gas removal is 3.2% less than the Study Design gas cost. The debit caused by increased power requirements is more than offset by savings from increased net SNG product and lower capital charges associated with the net reduced investment. However, studies by Air Products and Chemicals, Inc., under contract to DOE, have concluded that the selective (two-stage) heavy glycol solvent absorption process specified for the CCG Study Design can be optimized for use with the CCG process. Their results indicate that the gas cost for the optimized system can be reduced by about 1-2% versus the configuration used in the CCG Study Design. Thus the actual incentive for cryogenic acid gas removal as defined in this study is a gas cost savings of only 1-2%. This incentive is small relative to the likely problems in handling CO_2 freeze-out. Optimization of the cryogenic acid gas removal system could reduce its cost but would make it more difficult to deal with CO_2 freeze-out. Thus, there is little incentive for research on the cryogenic acid gas removal system as defined by this study.

Table 5.1-29

GAS COST SUMMARY
CRYOGENIC ACID GAS REMOVAL INCENTIVE STUDY

Basis:
- January, 1978 Instant Plant, Eastern Illinois Location
- 261 Billion Btu/Stream Day SNG (HHV Basis)
- 90% Capacity Factor
- 100% Equity Financing
- 15% Current Dollar DCF Return
- Escalation Rates:
  - Operating Costs & By-product revenues at 5%/yr.
- Total Erected Cost of 1430 M$

SNG Cost Components	Requirements (At Full Capacity)	Unit Costs 1978	SNG Cost Breakdown $/Million Btu (1978)
Illinois No. 6 coal (cleaned)	14,490 ST/SD(2)		
To Gasifiers	14,490 ST/SD(2)	20$/ST	1.111
To Coal Dryer Fuel	705 ST/SD	20$/ST	0.054
To Offsites Boiler Fuel	2,660 ST/SD	20$/ST	0.205
Subtotal	17,855 ST/SD		1.370
Major Chemicals			
KOH Solution (30% wt.)	189 ST/SD (Contained)	300$/ST	0.217
Lime (97% CaO)			
To Catalyst Recovery	1,005 ST/SD	39$/ST	0.151
To Flue Gas Desulfurization	249 ST/SD	39$/ST	0.037
Subtotal			0.405
Other Operating Costs			
Purchased Electric Power	219 MW	2.5$/kWh	0.504
Raw Water	5,400 gpm	15$/k/Gal	0.004
Other Catalysts and Chemicals	Many Items	5.4 M$/yr	0.065
Wages and Benefits	935 Men	21 k$/man/yr	0.228
Salaries and Benefits	250Men	25 k$/man/yr	0.072
Labor Overheeds and Supplies	20% of Wages, Salaries and Benefits		0.060
Materials and Overheads	3.3% of Total Erected Cost/Yr		0.551
Waste Solids Disposal	8,391 ST/SD		0.032
Subtotal		1$/ST	1.516
By-Product Revenues			
Ammonia (20% wt.)	231 ST/SD (Contained)	160 $/ST	(0.142)
Sulfur	324 LT/SD (2)	25 $/ST	(0.030)
Subtotal			(0.172)
Capital Charges			2.858
TOTAL SUBSTITUTE NATURAL GAS COST (RISP)(3)			5.977
CALL			5.98

Notes:
(1) $k = 10^3$, $M = 10^6$, $G = 10^9$.
(2) ST/SD = short tons/stream day (i.e. one day's operation at full plant capacity). LT = long tons.
(3) Required initial selling price in first year of plant operation.

5.1.19 Evaporation of Catalyst Solutions

A laboratory guidance study was made to estimate the economic impact of evaporating dilute catalyst solutions from catalyst recovery to concentrations which are suitable for direct addition to the gasifier feed coal. These estimates of evaporation costs were used to help assess technical and economic tradeoffs in the catalyst recovery section. As recovered solution concentration is reduced below the level in the CCG Study Design, fewer washing stages are required to achieve the same overall recovery. Also, the solid-liquid separations are easier in dilute solutions, due to lower viscosities, and in the case of separations based on gravitational forces (e.g., settlers, centrifuges), due to larger particle-solution density differences. The potential cost savings for dilute solutions must be weighed against the added costs to concentrate the recovered solution to the same level used in the Study Design.

In order to estimate the costs for evaporation, a series of screening studies were carried out. Figure 5.1-14 shows the general process flowsheet for these screening studies. It includes a conventional, multiple-effect evaporator for concentrating the catalyst solution and an air-fin condenser for recovering the evaporated water for recycle to catalyst recovery. The multiple-effect evaporator uses process steam in the first effect to concentrate the catalyst solution. Vapor raised in the first effect is condensed in the second effect to further concentrate the remaining solution. The vapor from the second effect is then condensed in the third effect, and so on. The vapor from the last effect is condensed in the air-fin condenser. To operate the evaporator in this manner, the solution pressure in each effect is maintained lower than the pressure in the preceding effect. The pressure in the last effect was set at 4.5 psia. This pressure is typical of multiple-effect evaporators and was selected because it gave the lowest combined evaporator-condenser area for representative cases.

The process basis for the current studies was set based on the CCG Study Design. The catalyst feed rate to the evaporator is the same as the catalyst rate from catalyst recovery in the Study Design (equivalent to 122.8 klb/hr of KOH). Two catalyst solution concentrations, 5 and 10% (wt.) were considered as feeds to the evaporator system. The concentrated product from the evaporator is a 32.2% (wt.) KOH catalyst solution, which is the same concentration as the recovered catalyst solution fed directly to the catalyst addition/entrained drying system in the Study Design. Steam to concentrate the solution in the evaporator is potentially available from two sources. Low pressure steam (e.g., 10-30 psig) can be produced from onsite waste heat, and higher pressure steam (e.g., 150 psig) can be produced by letting down high pressure steam from offsite boilers across non-condensing steam turbine drivers.

To estimate the economic impact of concentrating the dilute catalyst solutions, heat and material balances were made for each catalyst solution feed (5 and 10% (wt.) KOH) with each steam source and with a variable number

FIGURE 5.1-14

FORWARD FEEDING MULTIPLE-EFFECT EVAPORATOR

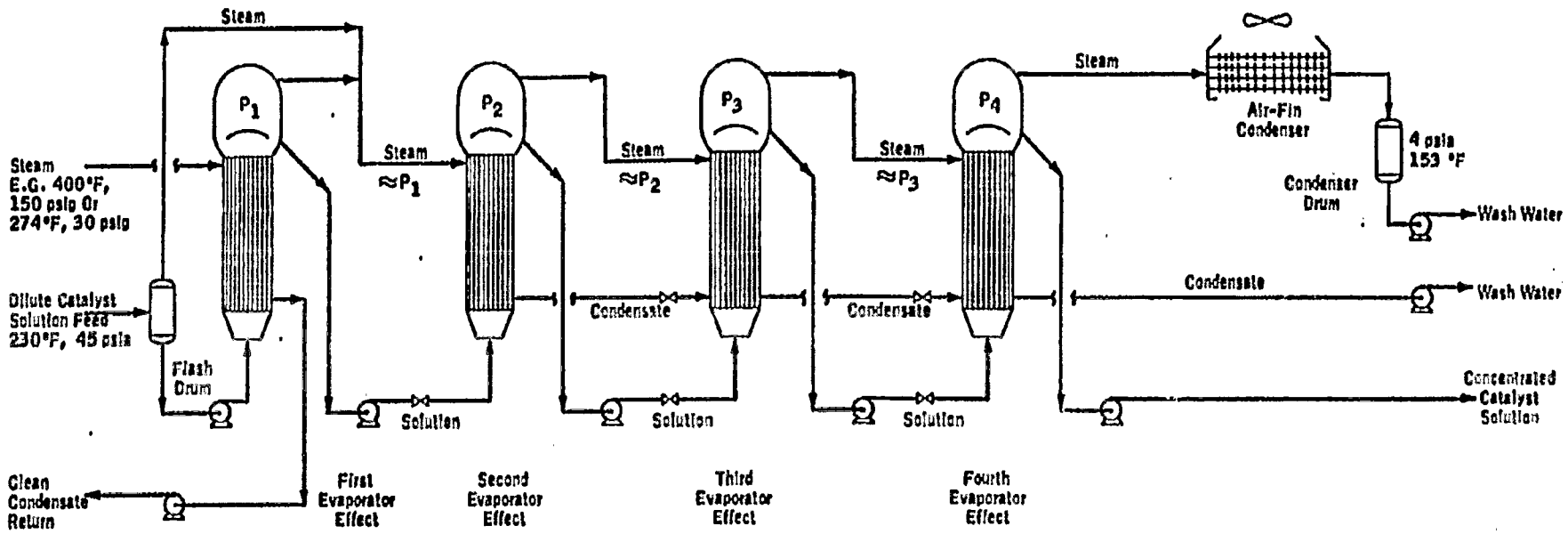

Note: (1) Pressures Are Cascaded So That $P_1 > P_2 > P_3 > P_4 = 4.5$ psia

79B-6-7-18

of effects in the evaporator. Based on these balances, both onsite and offsite equipment was sized and utility demands were determined. The number of parallel evaporation trains was set to maintain individual evaporator area below 32,000 ft^2 (the approximate maximum commercial size today). The incremental investment and operating costs were estimated based on comparable equipment and operating costs for the CCG Study Design. The incremental impact on the gas cost was then estimated using the CCG Study Design economic basis (100% equity financing, 15% DCF return on investment, January 1978 cost level, East Illinois location). By minimizing these incremental gas costs, the approximate optimum number of effects for each feed concentration at each steam pressure were selected. Table 5.1-30 summarizes these optimum cases. The range of incremental gas costs shown in the table reflects the sensitivity of the gas cost to uncertainties in the evaporator costs and the inclusion of a 25% process development allowance.

A comparision of the results for the high-pressure (offsite boiler) steam and unlimited low-pressure steam cases shows that for both feed concentrations, the impact on gas cost is minimized by utilizing the onsite waste heat to raise the required low-pressure steam. However, evaluation of the Study Design heat balance indicated that there is not sufficient waste heat available to raise the low-pressure steam required to operate the evaporator at the optimum conditions. With this constraint, either more effects must be added to the evaporator to make it more thermally efficient or high-pressure steam must be used to fill the deficit. If more effects are added to the evaporator, less steam is required, but the incremental gas cost will increase due to high investment charges. If only a few effects are added, the incremental gas cost increases above the optimum, but is still less than that for all high-pressure steam. The last line in Table 5.1-30 summarizes the rough optimum cases using the low-pressure steam estimated to be available based on the CCG Study Design heat balance.

In the case of 5% KOH feed with limited steam, all available 30 psig steam is used in a four-effect evaporator to concentrate about 40% of the total feed. Additionally, the low-level waste heat which remains after raising the 30 psig steam is used to raise 10 psig steam. The 10 psig steam is used in a three-effect evaporator to concentrate about 30% of the feed. The remaining feed (30%) is concentrated in a five-effect evaporator with high-pressure steam. (The incremental gas cost of using all 10 psig steam is greater than the incremental gas cost of using a combination of 10 psig and 30 psig steam.) In the case of 10% (wt) KOH feed, the solution can be evaporated to 32.2% (wt) entirely with 30 psig steam in a four-effect evaporator.

The impacts of evaporating dilute catalyst solutions on the overall CCG process efficiency and gas cost are much less if the solution from catalyst recovery is 10% (wt) KOH rather than 5% (wt). For 10% (wt) KOH solution, no supplemental offsite steam is required, and thus the impact on process efficiency is slight. The 10% (wt) KOH case also shows a clear economic incentive over the 5% (wt) case. The incremental gas cost for concentrating the 10%

Table 5.1-30

INCREMENTAL GAS COST FOR CONCENTRATING DILUTE CATALYST SOLUTIONS BY EVAPORATION

Process Basis

- Catalyst Feed: 122.8 klb/hr KOH (dry basis)
- Feed Concentration: 5 wt% KOH or 10 wt% KOH
- Product Concentration: 32.2 wt% KOH
- Available Steam: Offsite boiler steam at 150 psig and/or onsite waste heat steam at 10-30 psig

Economic Basis

- CCG Study Design producing 257 GBtu/SD SNG
- 100% equity financing/15% DCF return

Evaporator Steam Basis	5% KOH Feed: Evaporator Effects @ Steam Pressure, Psig	5% KOH Feed: Incremental Gas Cost, $/MBtu SNG	10% KOH Feed: Evaporator Effects @ Steam Pressure, Psig	10% KOH Feed: Incremental Gas Cost, $/MBtu SNG
• All Offsite Boiler Steam	5 @ 150	0.37-0.47	5 @ 150	0.17-0.22
• "Unlimited" Waste Heat Steam	2 @ 30	0.25-0.33	2 @ 30	0.11-0.14
• "Limited" Waste Heat Steam (Limit set by 1977 CCG Study Design)	4 @ 30 3 @ 10 5 @ 150	0.32-0.46	4 @ 30	0.12-0.19

(wt) solution to 32.2% (wt) is 0.12-0.19 $/MBtu, only 2-3% of the CCG Study Design gas cost of 6.18 $/MBtu. However, evaporating more dilute solutions could have a significantly greater cost impact. The incremental gas cost for concentrating the 5% (wt) solution is 0.32-0.46 $/MBtu. As discussed above, the use of dilute catalyst solutions will reduce the number of stages required for catalyst recovery. The results of this study have been incorporated in the Catalyst Recovery Screening Studies, which are discussed later.

5.1.20 Cost of Additives to Improve Solid-Liquid Separations Performance

An important factor in recovering the CCG catalyst from the spent gasifier solids is the performance of the solid-liquid separation devices used in the countercurrent water wash. Laboratory experiments have shown that filter aids (body feeds or precoats) and flocculating chemicals can increase filtration rates for CCG solids. If the filtration rate is increased, the total filter area required for each wash stage can be reduced. To justify using such an additive, the cost of the additive must be offset by savings in capital charges associated with reduced filter investment. To provide early guidance to the experimental programs, a simple economic evaluation was made to quantify the potential impact of these additives on the CCG gas cost.

The process and economic bases for calculating the cost impact were taken from the CCG Commercial Plant Study Design. The Study Design gasifier solids production rate was used to determine the total quantity of filter aid and/or flocculating chemical which would be required for a given additive/solids ratio. Typical costs for additives were obtained from manufacturers. The calculated gas cost impacts include only the operating cost of the additive itself. No credit was included for reduced filter area.

The potential gas cost impacts of filter aids and flocculating chemicals are summarized in Table 5.1-31 for a range of typical additive/gasifier solids ratios. These results show that the use of a filter aid (unit cost 100-200 $/ton) as a body feed at high additive/solids ratios would be very costly, perhaps over a dollar per MBtu of SNG. However, if a filter aid is used as a precoat at low additive/solids ratios--e.g., 0.1 pound precoat per pound solids or so--the impact on the gas cost may be acceptable. Flocculating chemicals offer more promise as an economical approach to increasing filtration rates. At typical concentrations (500 wppm on solids), the use of a flocculant would contribute only three cents per MBtu to the SNG cost.

As mentioned above, these gas cost impacts do not include the credit for reduced cost of the solid-liquid separation device. This impact was investigated and quantified as part of the Catalyst Recovery Screening Studies which are discussed below.

Table 5.1-31

GAS COST IMPACT OF ADDITIVES
TO IMPROVE SOLID-LIQUID SEPARATIONS

Cost of Filter Aids, $/MBtu SNG

	Requirement (Filter Aid/Solids Ratio) (1)		
Filter Aid Unit Cost	0.1 lb/lb	0.5 lb/lb	1.0 lb/lb
100 $/T	0.13	0.67	1.34
200 $/T	0.27	1.34	2.68

Cost of Flocculants, $/MBtu SNG

	Requirement (Flocculant/Solids Ratio) (1)		
Flocculant Unit Cost	100 wppm	500 wppm	1000 wppm
1000 $/T	< 0.01	< 0.01	0.01
5000 $/T	< 0.01	0.03	0.07

Note:

(1) "Solids" is used here to represent the total dry gasifier solids fed to catalyst recovery, typically including both the coarse char withdrawn from the bottom of the gasifier and the overhead fines recovered in external cyclones. Lime fed for calcium hydroxide digestion is excluded.

5.1.21 Catalyst Recovery Screening Studies

Work continued throughout the contract on a series of engineering screening studies to evaluate the economic impacts of alternative processing approaches and solid-liquid separation devices for CCG catalyst recovery. These screening studies assessed the process and economic impacts of countercurrent water washing of the spent gasifier solids to recover the catalyst, both with and without an initial lime digestion step. Filters, settlers, hydroclones, and centrifuges were considered to carry out the solid-liquid separations between washing stages.

Six catalyst recovery screening studies were completed. The cases differ in the type of solid-liquid separation device used in the countercurrent water washing sequence. Only the first case includes lime digestion, which solubilizes 90% of the total potassium in the char and fines. In the remaining cases, which utilize just water wash, only about 70% of the total potassium is soluble. The case numbers and subject are summarized in the following table.

SUMMARY OF CATALYST RECOVERY SCREENING STUDIES

Case Number	Subject
1	Lime Digestion with Rotary Drum Filters
2	Water Wash with Rotary Drum Filters
3	Water Wash with Gravity Settlers
4	Water Wash with Hydroclones
5	Water Wash with Centrifuges
6	Water Wash with Vacuum Belt Filters and Cake Washing

The work on these catalyst recovery screening studies followed a standard sequence. First, a process basis was established based on available information and data. A material and energy balance was then made for lime digestion (if included) and water-wash to determine the number of washing stages required to recover approximately 95% of the soluble catalyst at a desired concentration. The Catalyst Recovery Material Balance Model described in Section 5.2 of this report was used to facilitate this balance. Equipment sizes and specification lists were developed based on the material balance, and the investment and operating costs were estimated. These costs were compared to those predicted for alternative processing approaches and solid-liquid separation devices to select the most attractive alternatives for further study.

The process bases used for these studies reflect the solid-liquid separation data which were available late in 1979. Data collected later in the program was not reflected. The general trend of this new data is toward improved separability. If this data were to be used, it would tend to narrow the economic differences between cases and would not change any of the basic conclusions.

The work on these cases is described below under separate sub-headings.

Cases 1 and 2: Lime Digestion and Water Wash with Rotary Drum Filters

Case 1 is an evaluation of countercurrent water wash combined with lime digestion, using rotary drum filters for the solid-liquid separations. In Case 2, the solid-liquid separations are again carried out using rotary drum filters, but the initial lime digestion step is omitted. The process bases, material and energy balances, and equipment specifications were completed for both of these cases, investment and operating cost estimates were prepared, and preliminary economics were developed. As described in detail below, the rotary drum filters used in the washing sequence for these two cases were sized based on cake resistances estimated from bench scale filtration tests. As indicated below, Case 1 with digested solids requires both more filters and larger average area per filter, when compared to Case 2. However, Case 2 requires more makeup potassium hydroxide. This basic tradeoff is clearly reflected in the preliminary economics for these two cases, reported at the end of this subsection.

The process basis for Case 1 is summarized in Table 5.1-32 (along with the process bases for Cases 2 and 3, to be described later). A schematic flowsheet is shown in Figure 5.1-15. The rates of spent gasifier solids (char and potassium catalyst) fed to catalyst recovery are the same as in the CCG Study Design. The char feed consists of 68% coarse char withdrawn from the bottom of the gasifier and 32% fines collected in external cyclones. The bottoms char and cyclone fines feeds are slurried with "semi-rich" catalyst solution from the second wash stage and are digested at 300°F and 70 psia with a residence time of one hour. Here, lime is added to give a calcium/potassium ratio of 0.7 mole/mole. The lime reacts with insoluble forms of potassium to produce soluble potassium salts. About 90% of the total potassium fed is solubilized during digestion. The slurry from digestion is flashed to 20 psia (lowering the temperature to 230°F) and then filtered in first-stage filters to remove most of the solids. Continuous pressure rotary drum filters are utilized. The filters operate at an inlet pressure of 55 psia with a 35 psi pressure drop across the cake. The clarified filtrate from this first stage is the "rich" catalyst solution and has a potassium (K^+) concentration of 11.8 wt% (or about 17 wt% KOH). This rich solution is filtered a second time in pressure vertical-leaf polishing filters to remove any fines that may have passed through the rotary drum filters. Following this second filtration, the rich solution is concentrated in double-effect evaporators. The heat to drive the first effect of the evaporators is provided by 30 psig steam generated from onsite waste heat. The concentrated catalyst solution from the evaporators (22.8 wt% K^+) is combined with makeup KOH solution (20.9 wt% K^+) and sent to catalyst addition to be applied to the feed coal. The condensate from the evaporators is returned to the last stage of water wash, reducing makeup wash water requirements.

Table 5.1-32

CATALYST RECOVERY SCREENING STUDIES

SUMMARY OF PROCESS BASES

- For all three cases, total gasifier coal feed rate, catalyst loading on coal (15 wt% K_2CO_3 equivalent on dry coal), and solids rates leaving the gasifiers are the same as in the "CCG Study Design".

Basis Item	Case 1 Lime Digestion With Filters	Case 2 Water Wash With Filters	Case 3 Water Wash With Gravity Settlers
Concentrations of Key Solutions, wt% K^+:			
• Rich Solution from Catalyst Recovery	11.8	11.7	6.9
• Concentrated Solution from Evaporators	22.8	22.8	22.9
• Makeup Catalyst Solution	20.9(1)	20.9(1)	20.9(1)
Basis for Lime Digestion			
• Digestion Conditions:			
- Temperature, °F	300	Digestion Not Included	Digestion Not Included
- Pressure, psia	70		
- Residence Time, hour	1		
- Ca/K, mole/mole	0.7		
Basis for Water Wash/Solid-Liquid Separations			
• Percent of Total K Fed to Water Wash Which is Ultimately Water-Soluble	90	69.6	69.6
• Water Wash Conditions:			
- All Stages Except Last Stage:			
+ Temperature, °F	230	230	212
+ Pressure, psia	55	55	15
- Last Stage:			
+ Temperature, °F	146	150	167
+ Pressure, psia	15	15	
• Overall Target Recovery of Soluble K Fed	95	95	95
Basis for Evaporation			
• First Effect Steam Pressure, psig	30(5)	30(5)	30(5)
• Number of Effects	2	2	4
Basis for Heat Balance			
• Temperatures of Major Feeds, °F:			
- Bottoms Char	600	600	600
- Cyclone Fines	600	600	600
- Lime for Digestion	60	-	-
- Makeup Catalyst Solution	60	60	60
- Makeup Wash Water	60	60	60
• Steam Services and Pressures, psig:			
- Direct Injection to Digesters	150	-	-
- Direct Injection to Water Wash Stages	65	65	30
- Indirect Heating of Semi-Rich Solution	65	-	-
- Evaporators	30	30	30
• Key Heat Effects:			
- Sensible Heat Changes	Included	Included	Included
- Net Heats of Mixing and Catalyst Reactions	0	(6)	(6)
- Heat Losses from System	0	0	0

Notes:

(1) Makeup catalyst is received as a 30 wt% KOH solution (20.9 wt% K^+).
(2) The solids content in the underflow from all stages of thickeners is 15 wt%. However, the final stage includes filtration of the thickener underflow and the resulting solids concentration in the underflow (filter cake) leaving this stage is 30 wt%.
(3) Defined as weight percent of feed solids recovered in underflow.
(4) Separation efficiency for Case 3 varied from 89.4 to 91.6% for all stages except the first. The efficiency for the first stage was 97.4%.
(5) The 30 psig steam used in the evaporators is raised in gasifier effluent waste heat boilers.
(6) In water wash cases, net heats of mixing and catalyst reactions were taken as -8 kcal/g mole of K^+ dissolved.

FIGURE 5.1-15

CATALYST RECOVERY: DIGESTION WITH FILTERS

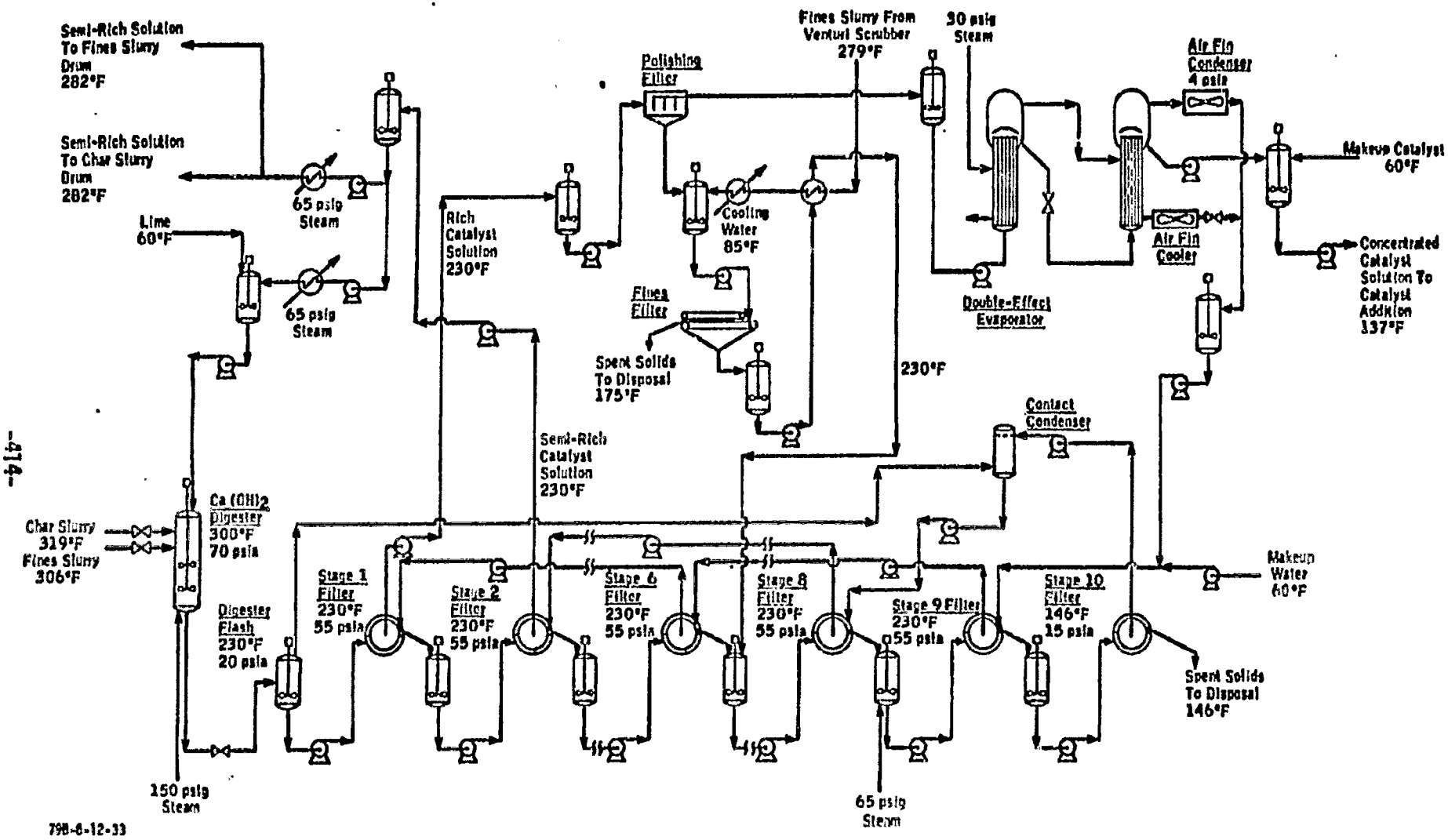

The solids in the first-stage filter cake continue on through the countercurrent water wash to recover the remaining soluble catalyst. Each washing stage consists of slurry mixing drums to provide contact between richer solids and leaner solution, and rotary drum filters for separating the solids. The filters used between each washing stage remove 99% of the solids fed. The filter cake from each stage contains 70% liquid and 30% solids. Ten washing stages are provided to recover 95% of the solubilized catalyst fed. The water wash takes place at 230°F, a temperature chosen to avoid flashing on the downstream side of the filter medium at 20 psia, while maintaining a relatively high temperature to improve filtration by reducing solution viscosity. The temperature in the last stage is reduced to allow solids removal without flashing in a final vacuum filtration step. This step provides a firm filter cake for disposal in the spent solids landfill.

In addition to the char and fines, the fines slurry from the product gas venturi scrubbers is also processed in catalyst recovery. This stream is combined with the solids from the rich catalyst solution polishing filters and filtered in atmospheric filter belt presses. The filtrate is added to the seventh stage of the countercurrent water wash and the solids are sent to disposal.

Process heat for the 300°F catalyst recovery digesters is provided indirectly with 65 psig steam (by heating the semi-rich catalyst solution prior to slurrying the char, fines, and lime), and directly by injecting live 150 psig steam. Heat to bring the ninth stage up to 230°F is provided by injecting live 65 psig steam and by condensing the steam generated in flashing the digester slurry.

Except for the deletion of the lime (calcium hydroxide) digesters and associated facilities, the flowsheet for Case 2 is similar to the flowsheet for Case 1 (Figure 5.1-15). Case 2 also uses pressure rotary-drum filters in the water-wash sequence. The process basis for Case 2 (Table 5.1-32) is essentially the same as for Case 1, except for the deletion of lime digestion and related basis items and a different assumption concerning the heats of mixing and catalyst reactions. The lime digestion step in Case 1 solubilizes 90% of the total potassium in the char and fines fed to the digesters. In Case 2, with just water wash, only about 70% of the total potassium is soluble. Both cases have a target recovery in the water-wash section of 95% of the total water-soluble catalyst fed.

For the water wash case (Case 2), laboratory data on the heat of mixing catalyzed char with water provided the basis for estimating a total heat effect of -8 kcal/g mole of K^+ dissolved. For the digestion case (Case 1), where no data were available, it was judged that this exothermic heat of mixing would be directionally offset by the heat required to drive the digestion reactions. Thus a net heat of zero was assumed.

The results of the detailed material and energy balances for these two cases are summarized in Table 5.1-33 (along with results for Case 3, to be described later). Some general comparisons between Cases 1 and 2 can be

Table 5.1-33

CATALYST RECOVERY SCREENING STUDIES

SUMMARY OF MATERIAL BALANCE RESULTS

Material Balance Result	Case 1 Lime Digestion With Filters	Case 2 Water Wash With Filters	Case 3 Water Wash With Gravity Settlers
• Number of Stages in Countercurrent Water Wash	10	10	8 (+ 1 spare)
• Recovery in Water Wash, % of Soluble K^+ Fed	94.3	94.9	93.1
• Rich Solution Concentration, wt% K^+	11.8	11.7	6.9
• Catalyst Makeup Requirement			
- Percent of Catalyst on Feed Coal	16.0	33.9	35.2
- Rate, ST/SD KOH (Dry)	233	495	513
- Rate, klbs/hr KOH (Dry)	19.4	41.3	42.7
• Lime Requirement, ST/SD (97% CaO)	1005	-	-
• Wash Water Rate, klbs/hr	1054	712	1017
• Water Evaporation Requirement, klbs/hr	288	235	558
• Spent Solids to Disposal, klbs/hr (Dry)			
- From Polishing Filters	15	14	18
- From Final Stage of Water Wash	291	200	196
• Total Slurry Feed to Solid-Liquid Separators, klbs/hr			
- To Stage 1	1750	1280	2450
- To Stage 2	2570	1810	3820
- To Stage 5	2400	1680	3650
- To Final Stage	2040	1390	2460

drawn from this table. In both cases, the countercurrent water wash recovers about 95% of the water-soluble potassium fed to the system in ten washing stages. However, with lime digestion the percentage of the total potassium recovered is significantly higher due to the solubilization of previously water-insoluble salts during the digestion process. Thus for Case 1 employing lime digestion, the overall potassium recovery is 84% and the makeup potassium hydroxide requirement is 19.4 klbs/hr. In Case 2 without digestion, the overall potassium recovery is only 66% and the makeup KOH requirement increases to 41.3 klbs/hr.

The larger KOH makeup requirement for Case 2 means a larger operating cost for its purchase. The screening studies allowed this economic debit for Case 2 to be weighed against the increased capital and operating costs associated with the lime digestion step in Case 1. Not only are there increased costs due to lime storage and handling and the lime digestion equipment, but also, as Table 5.1-33 shows, the entire water wash section is approximately 50% larger for Case 1 than for Case 2. This increase is due to the additional lime and lime-derived solids which must be handled in the digestion case. Furthermore, bench data have shown that the digestion process significantly reduces the particle sizes in the char slurry, making the subsequent solid-liquid separations more difficult. This impact on separations performance was reflected in these cases, based on available filtration data, as discussed below.

The continuous rotary drum filters in Cases 1 and 2 were designed starting with specific cake resistances calculated from bench-scale pressure filtration tests. If the resistance of the filtration medium is neglected, the specific cake resistance (α) is defined at any time during the buildup of a filter cake by the equation:

$$q = \frac{\Delta P_c g_c}{\mu \alpha \rho_c t_c}$$

where, q = volumetric filtration rate per unit area, $ft^3/sec \cdot ft^2$
ΔP_c = pressure drop across the cake, lb_f/ft^2
g_c = gravitational constant, 32.17 $lb_m \cdot ft/sec^2 \cdot lb_f$
μ = liquid viscosity, $lb_m/sec \cdot ft$
α = specific cake resistance, ft/lb_m
ρ_c = density of solids in cake, lb_m/ft^3
t_c = thickness of cake, ft

This fundamental equation can be integrated to provide an equation for calculating α from bench-scale filtration tests in which cumulative filtrate volume is measured as a function of time. The same equation can also be integrated to provide a design equation for sizing continuous rotary drum filters. Using the latter equations with α's calculated from the former, the early batch filter test results have been scaled up to calculate the required total filtration area and number of filters for these commercial screening studies.

The filtration experiments carried out through the end of 1979 used digested and undigested (water wash only) solids obtained from the Fluidized Bed Gasifier (FBG) unit operating at 100 psig. Most of these tests were conducted as part of the engineering technology program on slurry rheology and solid-liquid separations. (A revised summary of these laboratory batch filter results is tabulated in Table 5.3-15 of this report.) Some results were also available from bench filtration tests done in a vendor shop. The available results on cake resistance are summarized below along with the "base case" assumptions made for designing the filters in Cases 1 and 2.

BASIS FOR FILTER CAKE RESISTANCES*

	Cake Resistance, ft/lb x 10^{-11}			
	Calculated from Bench Data			
		Technology Program Tests		
Solids Type	Tests in Vendor Shop	All Feeds	Representative Feeds	Basis Assumed for Initial Screening Cases
Digested	5-13	1.2-36	15-36	10
Digested with Flocculant	No Runs	0.6-22	22?	5 (Case 1)
Water Washed	3-6	0.17-1.0	0.9-1.0	1.0
Water Washed with Flocculant	No Runs	------- No Runs -------		0.5 (Case 2)

* Based on data collected through the end of 1979.

As is evident from the ranges shown above, there was much variation in the calculated cake resistances for solids samples of the same general type. For the technology program tests, the results for the feed samples judged to be more representative are shown separately. For digested and water washed solids without flocculants, base cake resistances were assumed which are in the lower part of the overall range of values obtained in the vendor and representative technology program tests. Flocculants were assumed to cut these cake resistances in half, based on technology program results with digested solids plus flocculants and on qualitative flocculant screening studies. These latter values were used for sizing the filters in Case 1 (digested solids with flocculant) and Case 2 (water-washed solids with flocculant). Later test results on water-washed solids with flocculants from the engineering technology program indicated cake resistances considerably lower than the value of 0.5 x 10^{11} ft/lb used in Case 2. (See Table 5.3-17 in this report.)

In addition to cake resistance, several other process and mechanical specifications were set in order to size the pressure rotary drum filters. These design basis items are listed in Table 5.1-34. Important items for filter sizing are the pressure drop (35 psi), the initial cake thickness (0.25 in.) and the maximum filter drum size (12 ft diameter by 36 ft long, or 1,360 ft^2). The total area required for each filtration stage is constrained either by the minimum final cake thickness (0.75 in.) if the solids filter slowly as in Case 1, or by the maximum rotational speed (1 rpm) if the solids filter rapidly as in Case 2. Although not shown in Table 5.1-34, the design basis for the vacuum rotary drum filters serving the tenth and final washing stage is generally analogous. The feed conditions are 15 psia and about 150°F, and the cake pressure drop is reduced to 10 psi. In all cases, a 25% scale-up allowance on filter area is included.

The number and average size of the filters required for Cases 1 and 2 are summarized below.

SUMMARY OF ROTARY DRUM FILTER DESIGNS

	Pressure Filters		Vacuum Filters	
Case	Number(1)	Average Area	Number(1)	Average Area
Case 1 (Digested Solids)	70N/15S	1,240 ft^2 ea.	34N/6S	1,320 ft^2 ea.
Case 2 (Water-Washed Solids)	18N/ 9S	750 ft^2 ea.	4N/1S	870 ft^2 ea.

(1) N = normally operating; S = spare

Case 1 with digested solids requires both more filters and larger average area per filter.

The economics for the catalyst recovery screening cases have been developed on a 1978 dollar basis consistent with the revised CCG Study Design as described earlier in this report. However, the investments and operating costs for these screening cases include only the facilities and operating requirements for catalyst recovery, waste solids storage, makeup catalyst, and lime for digestion. Changes in other onsites and offsites sections are incorporated as cost deltas. The cost deltas were calculated using Case 2, Water Wash with Filters, as the "base case". Utilities requirements for the screening cases are reflected by including investments and operating costs which are an allocated share (based on usage) of the total CCG Study Design utilities costs.

The investment estimates for catalyst recovery screening Cases 1 and 2 are summarized in Table 5.1-35. The lime digestion step in Case 1 is not expensive in itself; the drums, pumps, and exchangers required for digestion

Table 5.1-34

CATALYST RECOVERY SCREENING STUDIES

DESIGN BASIS AND CONSIDERATIONS
FOR PRESSURE ROTARY DRUM FILTERS IN CASES 1 AND 2

Process Specifications

• Temperature	230°F
• Slurry Feed Pressure	55 psia
• ΔP Cake	35 psi
• Initial Cake Thickness	0.25 in.
• Final Cake Thickness (Minimum)	0.75 in.
• Cake Solids Content	30 wt%
• Specific Cake Resistance(1)	
- Digested Solids	5×10^{11} ft/lb
- Water-Washed Solids	0.5×10^{11} ft/lb

Mechanical Specifications

• Maximum Drum Size	12 ft Ø x 36 ft(2)
• Submergence	40%
• Maximum Rotational Speed	1 rpm
• Filter Drum Drive	15 hp
• Discharge	Knife Scraper with Sluice
• Knife Approach to Drum	0.25 in.
• Medium	Cloth
• Materials	Stress-Relieved Carbon Steel

Considerations

• Filter Availability	86%
• Minimum Sparing	1 Spare Filter per Stage
• Operators	1 per 5 Operating Filters
• Scale-up Allowance	25% of Theoretical Area

Notes:

(1) With addition of flocculant.

(2) These drum dimensions result in a maximum area of 1,360 ft^2 per filter.

Table 5.1-35

CATALYST RECOVERY SCREENING STUDIES

INVESTMENTS FOR ROTARY DRUM FILTER CASES

Basis:
- January, 1978 Instant Pioneer Plant
- Eastern Illinois Location

Plant Section	Investment Breakdown, Million $ Case 1 Lime Digestion With Filters	Case 2 Water Wash With Filters
• Catalyst Recovery		
- Lime Digestion	5	-
- Water Wash	217	62
- Fines Slurry Filtration	3	3
- Rich Solution Evaporation	11	10
Subtotal	236	75
• Changes in Other Onsites		
- Preheat Fired Heaters	(4)	Base
- Acid Gas Removal and Sulfur Recovery	15	Base
- Common Facilities	4	Base
- Others	0	Base
Subtotal	15	Base
• Catalyst-Related Offsites		
- Catalyst Receipt and Storage	1	3
- Lime Receipt and Storage(1)	10	-
- Onsites Waste Solids Handling	15	12
Subtotal	26	15
• Changes in Other Offsites	4	Base
• Allocated Utilities		
- Raw Water/Cooling Water	4	2
- Steam	15	5
- Electric Power	7	2
Subtotal	26	9
TOTAL DIRECT AND INDIRECT COSTS	307	99
PROCESS DEVELOPMENT ALLOWANCE (25% of Onsites D and I Costs)	63	19
PROJECT CONTINGENCY (25% of Total D and I Costs)	77	25
TOTAL ERECTED COST	447	143

Note:

(1) Excludes lime receipt and storage for flue gas desulfurization.

cost only 5 M$. However, the water wash section is very costly compared to Case 2. The higher investment in Case 1 is due both to the additional lime and lime-derived solids which must be washed, and to the higher filtration cake resistance measured for digested solids in bench-scale tests, as described above. Lime digestion solubilizes more potassium sulfides than water wash. These sulfides in turn are converted to hydrogen sulfide in the gasifiers. This increases the size of the acid gas removal and sulfur recovery sections in Case 1, but also results in heat effects which reduce preheat fired heater investment. Common facilities are larger for Case 1 because of increased process area requirements for catalyst recovery. Additional facilities were needed in Case 1 to handle the lime for digestion and to store the extra waste solids. Utilities consumptions are also larger for Case 1. Case 2 is more costly than Case 1 only in the catalyst receipt and storage area, reflecting the higher potassium hydroxide solution makeup rate (495 ST/SD KOH versus 233 ST/SD KOH in Case 1). Overall, Case 1 requires over three times the investment of Case 2.

The economic comparison between Cases 1 and 2 is presented in Table 5.1-36. Results are shown in terms of 1978 dollars per million Btu's of product SNG (substitute natural gas), based on the CCG Study Design SNG rate of 257 billion Btu/SD. The economic basis is the same used for the CCG Study Design. Based on these initial screening studies, catalyst recovery via lime digestion with rotary drum filters (Case 1) costs a total of 1.75 $/MBtu, 0.77 $/MBtu more than water wash with rotary drum filters (Case 2). With water wash, makeup potassium hydroxide costs over 0.30 $/MBtu more than with lime digestion. However, the cost of the lime for digestion offsets half of this increase. Much larger costs in Case 1 for utilities and other operating requirements, and the capital charges associated with the larger investment discussed above, more than offset the remaining makeup cost delta and add up to an overwhelming deficit for lime digestion. Thus, water wash without lime digestion is likely to have a very significant advantage if rotary drum filters are used for the solid-liquid separations.

The material and energy balances for these screening cases include the estimated impact of adsorption of aqueous potassium ion ($K^+_{(aq)}$) on the char/fines solids. This adsorption effect seems to behave like an equilibrium: the amount of $K^+_{(aq)}$ adsorbed on the solids is apparently a function of the $K^+_{(aq)}$ concentration in the solution. In these initial screening cases, a strong equilibrium potassium adsorption has been assumed based on early, limited experimental results. Inclusion of this equilibrium approximately doubles the solid-liquid separations equipment required to achieve a given potassium recovery, compared to an analogous case with no $K^+_{(aq)}$ adsorption. Additional laboratory studies indicated that $K^+_{(aq)}$ adsorption may be less strong than assumed in Cases 1 and 2. This would bring down the costs in both cases, but would be unlikely to eliminate the big advantage for Case 2.

As indicated previously, these initial catalyst recovery screening studies were intended only to select the more promising process and solid-liquid separation alternatives for further study. There is much uncertainty

Table 5.1-36

CATALYST RECOVERY SCREENING STUDIES

ECONOMICS FOR ROTARY DRUM FILTER CASES

Basis:
- January, 1978 Instant Pioneer Plant, Eastern Illinois Location
- 257 Billion Btu/Stream Day SNG (HHV Basis)
- 90% Capacity Factor
- 100% Equity Financing
- 15% Current Dollar DCF Return
- Escalation Rates:
  - Operating Costs and By-Product Revenues at 5%/Year
  - SNG Revenues at 6%/Year

Catalyst Recovery Cost Components	Cost Breakdown, $/Million Btu SNG: Case 1 Lime Digestion With Filters	Case 2 Water Wash With Filters
• Illinois No. 6 Coal @ 20 $/ST	0.000	Base
• Major Chemicals		
- KOH Solution @ 300 $/ST KOH	0.272	0.578
- Lime (97% CaO) @ 39 $/ST	0.153	-
- Flocculant (D-25A) @ 4200 $/ST	0.042	0.030
Subtotal	0.467	0.608
• Allocated Utilities		
- Raw Water/Cooling Water	0.009	0.005
- Steam	0.017	0.005
- Electric Power	0.050	0.012
Subtotal	0.076	0.022
• Other Operating Costs		
- Wages and Benefits	0.083	0.028
- Salaries and Benefits	0.025	0.009
- Labor Overheads and Supplies	0.022	0.007
- Materials and Overheads	0.162	0.051
- Waste Solids Disposal @ 1 $/ST	0.014	Base
- Fuel Gas (SNG) @ 6.18 $/MBtu	(0.008)	Base
- Filter Medium Replacement	0.009	0.001
Subtotal	0.307	0.096
• By-Product Revenues		
- Ammonia @ 160 $/ST NH_3	0.000	Base
- Sulfur @ 25 $/LT	(0.008)	Base
Subtotal	(0.008)	Base
• Capital Charges	0.910	0.256
TOTAL CATALYST-RECOVERY-RELATED COST	1.752	0.982
CALL	1.75	0.98

in the current filtration cake resistance measurements and the resulting filter sizes for digested and water-washed solids, so caution is necessary in trying to draw firm conclusions from the current studies. However, these results do support one important recommendation: laboratory and engineering work should emphasize catalyst recovery via water wash. In keeping with this recommendation, the PDU Catalyst Recovery Unit was operated in the water wash only mode. Similarly, the next three catalyst recovery screening studies in the engineering program, described below, were based on water wash.

The estimated total catalyst-recovery-related costs in Case 2, Water Wash with Filters, are 0.98 $/MBtu of product SNG. A brief side study was carried out to break out the corresponding cost items from the CCG Study Design. The estimated costs for these same areas in the Study Design are 0.76 $/MBtu. Thus, catalyst-recovery-related costs for Case 2 are 0.22 $/MBtu higher than for the Study Design. This increase represents roughly 3-4% of the total Study Design SNG cost of 6.18 $/MBtu. It is much too early to conclude that overall CCG costs will necessarily increase by this amount. As discussed earlier, costs for these screening studies may be over-estimated because potassium may not adsorb on the solids as strongly as was assumed. Also, no attempt has yet been made to optimize the catalyst recovery processing sequence.

Another key factor is catalyst makeup cost. Studies carried out during the CCG Predevelopment Contract concluded that makeup KOH for commercial CCG plants could cost from 25% to as much as 45% less than the nominal market price, due mainly to lower KOH purity requirements and economies of scale in KOH manufacture (by electrolysis of potassium chloride). The price assumed for KOH in the Study Design economic basis, 300 $/ST (contained), was only 15% below the then current (1978) market price. If economics for Case 2 were based on KOH at 200 $/ST, 44% less than the 1978 market price, the increase in catalyst-recovery-related costs would be less than 1% of the Study Design SNG cost.

Case 3: Water Wash with Gravity Settlers

Case 3 is an evaluation of catalyst recovery via water wash using gravity settlers for the solid-liquid separations. Laboratory settling tests for gasifier solids at two potassium concentrations were carried out to provide the basis for estimating the size of commercial gravity settlers for this service, as described below. The economic comparison between Case 2 and Case 3 provides an initial indication as to whether filters or gravity settlers are more attractive for catalyst recovery solid-liquid separations.

The flowsheet for Case 3 is similar to that for Case 2, Water Wash with Filters, except that gravity settlers rather than rotary drum filters are used in the water-wash sequence. The process basis for Case 3, shown in Table 5.1-32, is also closely related to the Case 2 basis. Water wash again solubilizes about 70% of the total potassium, and the water-wash se-

quence recovers about 95% of this amount. The temperature of the water wash is lowered to 212°F in Case 3 (as compared to 230°F in Case 2), to avoid the cost of pressurizing the gravity settlers above atmospheric. By maintaining a temperature above ambient, a higher settling rate is obtained because of lower solution viscosity and density. The settlers still must be enclosed to prevent exposure to air which would oxidize sulfur-containing potassium salts (e.g., KHS and K_2S) to forms with low catalytic activity (e.g., K_2SO_4). As in the previous two cases, the temperature in the last stage is reduced to allow solids removal without flashing.

The gravity settlers used in Case 3 are not as efficient as the filters and recover only about 90% of the solids fed to them in an underflow stream which contains 15 wt% solids. They are also not as effective at higher catalyst concentrations where the density difference between the particles and the solution is small. For these reasons, Case 3 recovers the catalyst in only a 6.9 wt% K^+ (or 10 wt% KOH) solution. This solution is then concentrated to 22.9 wt% K^+ in quadruple-effect evaporators before recycle to catalyst addition.

The material and energy balances shown in Table 5.1-33 help in understanding the basic tradeoffs between Cases 2 and 3. Although the makeup KOH requirement is very similar for the two cases, the flow rates in water wash are about twice as large in Case 3. This results from the lower rich solution concentration in Case 3 and the less efficient separations in the gravity settlers. The evaporation requirement is also up for the same reason. However, 93% recovery of water-soluble potassium is obtained in only eight stages of washing. A ninth spare stage in series is also provided. (In Cases 1 and 2, spare filters are provided in parallel for each stage.)

The gravity settlers (or "thickeners") in Case 3 were designed starting with data from bench-scale batch settling tests conducted in a one-liter graduated cyclinder. Results of these tests are reported earlier in this report. The graduated cylinder was jacketed with a hot-water bath to maintain the desired temperature. Experiments were conducted by filling the cylinder with solids slurry, and measuring the solids interface height versus time as the solids settled. These data were plotted, and a graphical construction procedure developed by H. H. Oltmann was used to determine the characteristic "critical settling time" (θ_c). (This procedure is described in Fitch, E. B. and Stevenson, D. G., "Solid/Liquid Separation Equipment Scale-Up," ed. Purchas, D. B., Chapter 4, Uplands Press Ltd., Croydon, England, 1977.) The experimental θ_c was then translated into a design solids flux rate for commercial-scale gravity settlers using the following equation:

$$G_c = \frac{W}{2 A \theta_c}$$

where, G_c = design solids flux rate, lb/hr-ft^2
W = weight of solids in the batch settling test, lb
A = cross sectional area in the batch settling test, ft^2
θc = critical settling time, hr

The factor of two in the denominator is a typically recommended scale-up allowance or "safety factor."

The bench-scale settling experiments carried out to date have used undigested (water wash only) solids from the Fluidized Bed Gasifier (FBG) unit operating at 100 psig. The design solids flux rates calculated from these test data are shown in the table below.

DESIGN SOLIDS FLUX RATES
FOR WATER-WASHED FBG SOLIDS

KOH in Liquid	Flocculant	Design Solids Flux
2 wt%	D-25A/25 ppm	52 lb/hr-ft^2
10 wt%	D-25A/50 ppm	33 lb/hr-ft^2

The concentration of KOH in the slurry liquid has a fairly strong influence on the solids settling rate. Settler sizing for Case 3 is based on adding flocculants in the initial dosages shown in the above table. The bench experiments indicated that flocculants increased settling rates substantially.

These design solids fluxes determined from bench data were used to size the gravity settlers in catalyst recovery screening Case 3. The more concentrated solution in the bench experiments, 10 wt% KOH, is equivalent to the catalyst salts concentration in the first or "rich" stage of the Case 3 water wash sequence. Settling rates for leaner stages were based on linear interpolation between the 10 wt% KOH and 2 wt% KOH design solids fluxes. The results of the sizing calculations are summarized below:

GRAVITY SETTLER DESIGN SUMMARY FOR CASE 3

Wash Stage	Settler Diameter, ft	Feed Compartment Diameter, ft
1	102	29
2	102	36
3	93	36
4 & 5	90	36
6 & 7 & 8	85	36
9	77	29

A 10-foot deep feed compartment in the center of each settler provides 10 minutes residence time for slurry mixing and solids flocculation. The settlers are all 15 ft deep at the outer wall, and fully enclosed to maintain a temperature near 212°F and to avoid exposure to air. Air exposure must be avoided to prevent oxidation of sulfur-containing potassium salts, as indicated above. Only eight water-wash stages are required to achieve the design recovery of 93% of the water-soluble potassium. A spare settler is provided in series so that the design recovery can be achieved when any one settler is down for maintenance.

The investment estimate for catalyst recovery screening Case 3 is summarized and compared to the investment for Case 2 in Table 5.1-37. The investment cost for water wash facilities in Case 3 using gravity settlers is less than half the corresponding cost for Case 2 using rotary drum filters. This change is partially offset by the increased cost for rich solution evaporation in Case 3, which produces only a 7 wt% K^+ rich solution from water wash compared to the 12 wt% K^+ rich solution produced in Case 2. Also, the gravity settlers need more plot area than the filters, and this is reflected in a larger cost for common facilities in Case 3. Costs for offsites and utilities are very similar in the two cases. Overall, the Case 3 investment including process development allowance and project contingency is estimated to be 111 M$, 32 M$ (or 22%) less than in Case 2.

The economic comparison between Cases 2 and 3 is presented in Table 5.1-38. Results are shown in terms of 1978 dollars per million Btu's of product SNG (substitute natural gas), based on the CCG Study Design rate of 257 billion Btu/SD. As noted above, the economic basis is the same used for the CCG Study Design. These initial screening studies indicate that catalyst recovery via water wash with gravity settlers costs 0.93 $/MBtu (Case 3), 0.05 $/MBtu less than via water wash with rotary drum filters (Case 2). For both cases, makeup KOH solution is a major part of the cost. Makeup KOH costs slightly more for Case 3 because overall catalyst recovery is a bit less. Because of the larger volumes of slurry handled in Case 3, flocculant requirements are roughly doubled. The lower investment for Case 3 shows up in reduced capital charges and materials and overheads, and this is the main reason why Case 3 costs less overall.

These results show that water wash with gravity settlers may have a moderate economic advantage over water wash with rotary drum filters. However, this conclusion must be viewed as preliminary only. The filters and settlers in these two cases were sized using limited data from bench-scale tests. The bench tests used solids from the Fluidized Bed Gasifier (FBG) operating at 100 psig.

Cases 4 and 5: Water Wash with Hydroclones and Centrifuges

Case 4 and Case 5 were evaluations of catalyst recovery via water wash using hydroclones (liquid cyclones) and solid-bowl centrifuges, respectively, for the solid-liquid separations. For these initial screening studies, estimates of the separations performance of hydroclones and centrifuges were

Table 5.1-37

CATALYST RECOVERY SCREENING STUDIES
INVESTMENTS FOR WATER WASH CASES

Basis: • January, 1978 Instant Pioneer Plant
• Eastern Illinois Location

Plant Section	Investment Breakdown, Million $ Case 2 Water Wash With Filters	Case 3 Water Wash With Gravity Settlers
• Catalyst Recovery		
- Water Wash	62	26
- Fines Slurry Filtration	3	4
- Rich Solution Evaporation	10	19
Subtotal	75	49
• Changes in Other Onsites		
- Preheat Fired Heaters	Base	0
- Acid Gas Removal and Sulfur Recovery	Base	0
- Common Facilities	Base	3
- Other	Base	0
Subtotal	Base	3
• Catalyst-Related Offsites		
- Catalyst Receipt and Storage	3	3
- Onsites Waste Solids Handling	12	13
Subtotal	15	16
• Changes in Other Offsites	Base	0
• Allocated Utilities		
- Raw Water/Cooling Water	2	2
- Steam	5	7
- Electric Power	2	1
Subtotal	9	10
TOTAL DIRECT AND INDIRECT COSTS	99	78
PROCESS DEVELOPMENT ALLOWANCE (25% of Onsites D and I Costs)	19	13
PROJECT CONTINGENCY (25% of Total D and I Costs)	25	20
TOTAL ERECTED COST	143	111

Table 5.1-38

CATALYST RECOVERY SCREENING STUDIES
ECONOMICS FOR WATER WASH CASES

Basis:
- January, 1978 Instant Pioneer Plant, Eastern Illinois Location
- 257 Billion Btu/Stream Day SNG (HHV Basis)
- 90% Capacity Factor
- 100% Equity Financing
- 15% Current Dollar DCF Return
- Escalation Rates:
  - Operating Costs and By-Product Revenues at 5%/Year
  - SNG Revenues at 6%/Year

Catalyst Recovery Cost Components	Cost Breakdown, $/Million Btu SNG: Case 2 Water Wash With Filters	Case 3 Water Wash With Gravity Settlers
• Illinois No. 6 Coal @ 20 $/ST	Base	0.000
• Major Chemicals		
- KOH Solution @ 300 $/ST KOH	0.578	0.599
- Flocculant (D-25A) @ 4200 $/ST	0.030	0.059
Subtotal	0.608	0.658
• Allocated Utilities		
- Raw Water/Cooling Water	0.005	0.005
- Steam	0.005	0.007
- Electric Power	0.012	0.010
Subtotal	0.022	0.022
• Other Operating Costs		
- Wages and Benefits	0.028	0.021
- Salaries and Benefits	0.009	0.007
- Labor Overheads and Supplies	0.007	0.006
- Materials and Overheads	0.051	0.037
- Waste Solids Disposal @ 1 $/ST	Base	0.000
- Filter Medium Replacement	0.001	0.000
Subtotal	0.096	0.071
• By-Product Revenues		
- Ammonia @ 160 $/ST NH_3	Base	0.000
- Sulfur @ 25 $/LT	Base	0.000
Subtotal	Base	0.000
• Capital Charges	0.256	0.183
TOTAL CATALYST-RECOVERY-RELATED COST	0.982	0.934
CALL	0.98	0.93

based primarily on calculations by two Exxon-proprietary computer models. Available data on the properties of dry CCG char and fines were used to develop a basis for "typical" particle densities and size distributions for input to the computer models. The results of the computer model calculations were supplemented by information, gathered from equipment vendors, in-house consultants, and the literature, on equipment types, sizes, performance, and operating limitations for this service.

The major process basis items for Cases 4 and 5 are summarized in Table 5.1-39. Also included for comparison are the values previously set for the other two screening studies utilizing water washing only, Cases 2 and 3. For all four cases, the total gasifier coal feed rate, catalyst loading on coal, and solids rates leaving the gasifiers are the same as in the CCG Study Design. As described in more detail above, the rotary drum filters in Case 2 recover 99% of the solids fed to them as a cake containing 30 wt% solids. The catalyst is recovered in a rich solution which is about 12 wt% K^+ (or about 17 wt% KOH). The gravity settlers used in Case 3 are not as efficient as the filters and recover only about 90% of the solids fed to them in an underflow stream which contains 15 wt% solids. The settlers are also not as effective at higher catalyst concentrations where the density difference between the particles and the solution is small. For these reasons, Case 3 recovers the catalyst in only a 6.9 wt% K^+ (or 10 wt% KOH) solution.

Based on computer model calculations, the hydroclones in Case 4 can recover 90% of the solids fed to them in an underflow stream which contains 15 wt% solids. When the solution contained in the particle pores is included, this underflow solids concentration corresponds approximately to the maximum volume percent solids content (25 vol%) recommended by in-house consultants and vendors. Above 20-25 vol% solids in the underflow, hydroclones drop off sharply in solid-liquid separation efficiency. Hydroclone efficiency is also reduced significantly at feed solids contents above 10-12 vol%. Further more, particle attrition due to high shear rates in the hydroclones is another potential source of efficiency dropoff. For these reasons, the catalyst is recovered in a fairly dilute (7.0 wt% K^+) "rich" solution, similar to Case 3. With this rich solution concentration, the solids contents of the feeds to the hydroclones are about 11 vol% (7 wt%). Lower rich solution concentration reduces the number of water wash stages, and thus the potential for particle attrition.

The centrifuges used in Case 5 are more efficient than hydroclones and recover 95% of the solids fed to them in a solids discharge stream which contains 25 wt% (45 vol%) solids. The catalyst solution is recovered in a 9.4 wt% K^+ (13.5 wt% KOH) solution. This concentration was judged reasonable based on the expected economic tradeoff between water wash costs and evaporation costs. In Case 5 as in the other three cases, the catalyst solution from water wash is concentrated to about 23 wt% K^+ in multiple-effect evaporators before recycle to catalyst addition.

Table 5.1-39

CATALYST RECOVERY SCREENING STUDIES
SUMMARY OF PROCESS BASES FOR WATER WASH CASES

Basis Item	Case 2 Rotary Drum Filters	Case 3 Gravity Settlers	Case 4 Hydroclones	Case 5 Centrifuges
• Char and Fines Rates	Same as in the "CCG Study Design"			
• Solution Concentrations, wt% K^+				
- Rich Solution from Catalyst Recovery	11.7	6.9	7.0	9.4
- Concentrated Solution from Evaporators	22.8	22.9	22.9	22.9
- Makeup Catalyst Solution	20.9(1)	20.9(1)	20.9(1)	20.9(1)
• Soluble K, % of Total K Fed	69.6			
• Target Recovery, % of Soluble K	95			
• Water Wash Conditions				
- All Stages Except Last Stage				
+ Temperature, °F	230	212	230	230
+ Pressure, psia	55	15	20	20
- Last Stage				
+ Temperature, °F	150	167	176	157
+ Pressure, psia	15	15	15	15
• Solid-Liquid Separator Performance				
- Solids in Underflow, wt%	30	15(2)	15(2)	25(3)
- Solids in Overflow, wt%	0.2-0.5	0.8-1.3	1.1-2.8	0.9-1.9
- Solids Separation Efficiency, %(4)	99	Ca. 90(5)	90	95
• Supplementary Fines Processing	No	No	Yes	Yes

Notes:

(1) Makeup catalyst is received as a 30 wt% KOH solution (20.9 wt% K^+).

(2) The solids content in the underflow from all stages of thickeners in Case 3 and hydroclones in Case 4 is 15 wt%. However, in each case the final stage includes vacuum rotary drum filtration of the thickener or hydroclone underflow and the resulting solids content in the underflow (filter cake) leaving this stage is 30 wt%. Filter efficiency is 99%.

(3) The solids content in the underflow from all stages of centrifuges is 25 wt%. However, the final stage employs vacuum rotary drum filtration and the resulting solids content in the underflow (filter cake) leaving this stage is 30 wt%. Filter efficiency is 99%.

(4) Defined as weight percent of feed solids recovered in underflow.

(5) Separation efficiency for Case 3 varies from 89.4 to 91.6% for all stages except the first. The efficiency for the first stage is 97.4%.

About 70% of the total potassium is water-soluble in Cases 4 and 5, as in previous water wash cases. All the cases have a target recovery in the water-wash section of 95% of the water-soluble catalyst fed. Cases 4 and 5 maintain the water wash temperature at 230°F. By maintaining temperature above ambient, higher solid-liquid separation efficiency is achieved because of lower solution viscosity and density. For all cases, the temperature in the last stage is reduced to facilitate solids removal in a final vacuum filtration step. This step provides a firm filter cake for disposal in a spent solids landfill.

In Cases 4 and 5, a large portion of the feed solids go overhead in the rich catalyst solution from the first stage solid-liquid separators. Because of this, supplementary solids processing steps are required to recover a portion of the soluble catalyst which would be lost if these solids were simply removed in polishing filters. The added processing incorporates a two-stage countercurrent water-wash sequence using rotary drum filters. The venturi scrubber slurry is also treated in these facilities, and the resultant recovered catalyst solution is recycled to the main water wash sequence.

The results of the detailed material and energy balances for these two cases are summarized in Table 5.1-40. Also included are the results from the balances for Cases 2 and 3. In all cases the countercurrent water wash recovers 93-95% of the water-soluble potassium fed to the system. In Case 4, 93.6% recovery is achieved in a 7.0 wt% K^+ (or 10 wt% KOH) solution with nine stages of washing. Case 5 recovers about the same amount of catalyst (93.7%), but in a more concentrated solution -- 9.4 wt% K^+ (13.5 wt% KOH) -- and uses only eight stages of countercurrent water wash. Case 5 requires fewer stages than Case 4 because the centrifuges not only have a higher solids separation efficiency than hydroclones, but also achieve a much higher underflow solids concentration than hydroclones (25 wt% solids versus 15 wt% for hydroclones).

The KOH makeup requirement is about the same for all these water wash cases because approximately the same overall recovery is obtained. Wash water rates and evaporation requirements are dependent on rich solution concentration. Thus the "dilute" cases, Cases 3 and 4, have the highest wash rates and water evaporation requirements, while Case 5 values are intermediate between these and the most "concentrated" case, Case 2.

The spent solids rates reflect the fact that, for the devices with lower solids separation efficiency, relatively more solids leave the main water wash sequence in the first stage overflow (or filtrate), and therefore less solids exit from the final water wash stage. The first stage overflow solids are ultimately combined with the venturi scrubber slurry, washed, then removed from the system using polishing filters.

As indicated above, hydroclone performance estimates for Case 4 were made using an Exxon-proprietary computer model. This model was developed from experimental data on separation of fluid coker fines from recycle coker

Table 5.1-40

CATALYST RECOVERY SCREENING STUDIES
SUMMARY OF MATERIAL BALANCE RESULTS FOR WATER WASH CASES

Material Balance Result	Case 2 Water Wash With Filters	Case 3 Water Wash With Gravity Settlers	Case 4 Water Wash With Hydroclones	Case 5 Water Wash With Centrifuges
• Number of Stages in Countercurrent Water Wash	10	8 (+ 1 spare)	9	8
• Recovery in Water Wash, % of Soluble K^+ Fed	94.9	93.1	93.6	93.7
• Rich Solution Concentration, wt% K^+	11.7	6.9	7.0	9.4
• Catalyst Makeup Requirement				
- Percent of Catalyst on Feed Coal	33.9	35.2	34.8	34.7
- Rate, ST/SD KOH (Dry)	495	513	508	507
- Rate, klbs/hr KOH (Dry)	41.3	42.7	42.4	42.2
• Wash Water Rate, klbs/hr	712	1017	1001	815
• Water Evaporat n Requirements, klbs/hr	235	558	556	351
• Spent Solids to Disposal, klbs/hr (Dry)				
- From Polishing Filters	14	18	34	22
- From Final Stage of Water Wash	200	196	180	192
• Total Slurry Feed to Solid-Liquid Separators, klbs/hr				
- To Stage 1	1280	2450	4310	1550
- To Stage 2	1810	3820	3590	2220
- To Stage 3	1750	3750	3520	2160
- To Final Stage	1390	2460	2360	1600

scrubber liquid with 10 mm hydroclones. The model agrees well with vendor and literature information on the performance of small hydroclones. The model was adjusted using literature data for the performance of hydroclones in the 3 to 6 in. diameter range. Predictions of hydroclone performance for CCG solids were based on particle size distributions for dry bottom char and dry overhead fines from the 100 psig Fluid Bed Gasifier (FBG). Two blends of char and fines were used: "fresh" solids containing 68% char and 32% fines (the proportion for the CCG Study Design) and "attrited" solids containing, by assumption, 33% char and 67% fines.

The computer model gave the following hydroclone performance predictions for a typical feed slurry using the two particle size distributions:

PERFORMANCE PREDICTIONS FOR HYDROCLONES

	Hydroclone Diameter		
	3 in.	4 in.	6 in.
Feed Flow Rate, gpm	27	45	92
Overflow/Underflow Ratio	----------	1.5	----------
Pressure Drop, psi	----------	50	----------
Efficiency, %			
- Fresh Solids	94.5	93.8	92.6
- Attrited Solids	88.4	87.0	84.6

Based on these predictions, and assuming that the average particle size distribution is between the two distributions, an efficiency of 90% for 4 in. hydroclones was used to develop the Case 4 water wash material balance.

In specifying the hydroclones for the nine washing stages in Case 4, it was assumed that the 4 in. hydroclones would be manifolded together in radial units of 14 or 15 individual hydroclones. A total of 110 radial units are required, including 92 normally operating units and 18 spares. The total number of individual 4 in. hydroclones required in Case 4 is 1,578.

Centrifuge performance estimates for Case 5 were also made using an Exxon-proprietary computer model. This model was based on the widely-used "sigma" concept, which relates solids separation efficiency to centrifuge geometry and throughput. The separations capacity of a particular centrifuge can be expressed in terms of its "sigma value". Sigma is roughly proportional to the settling area for the specific machine multiplied by the centrifugal force developed. Of the many available centrifuge types, solid-bowl centrifuges appear to be best suited for the solid-liquid separations

in CCG catalyst recovery. They have high throughput capability and can separate a feed with relatively high solids content. The largest commercially available solid-bowl centrifuges can process 400-700 gpm of slurry feed and have theoretical sigma values of up to 2.0×10^8 cm^2. To correct for non-idealities in centrifuge performance, a correction factor of 50% was applied, reducing the effective sigma value to 1.0×10^8 cm^2.

The computer model provided the following performance predictions for these large solid-bowl centrifuges, using the same "fresh" and "attrited" CCG solids distributions described above:

PERFORMANCE PREDICTIONS FOR CENTRIFUGES

Effective Sigma = 1.0×10^8 cm^2

	Centrifuge Feed Rate, gpm		
	400	500	600
Efficiency, %			
- Fresh Solids	97.4	96.9	96.4
- Attrited Solids	94.4	93.5	92.4

Based on these predictions, and assuming that the average particle size distribution is between the two distributions, an efficiency of 95% at 500 gpm feed rate was used to develop the Case 5 water wash material balance. For the seven washing stages in Case 5 served by centrifuges (the separation in the eighth stage is made by vacuum rotary drum filters), a total of 68 500 gpm solid-bowl centrifuges are needed, including 54 normally operating units and 14 spares.

The economics for the catalyst recovery screening cases 4 and 5 have been developed on a 1978 dollar basis consistent with the revised CCG Study Design as described earlier in this report. However, the investments and operating costs for these screening cases include only the facilities and operating requirements for catalyst recovery, waste solids storage, and makeup catalyst. Changes in other onsites and offsites sections are incorporated as cost deltas with Case 2, Water Wash with Filters, treated as the "base case". Utilities requirements for the screening cases are reflected by including investments and operating costs which are an allocated share -- based on usage -- of the total CCG Study Design utilities costs.

The investment estimates for catalyst recovery screening Cases 4 and 5 are summarized and compared to the investments for Cases 2 and 3 in Table 5.1-41. Investment for the catalyst recovery facilities in Case 4, Water Wash with Hydroclones, falls between that for Cases 2 and 3 with filters and settlers, respectively. The mechanical complexity of Case 4 is intermediate to that of Cases 2 and 3, and this is the reason for the intermediate investment cost. The investment for catalyst recovery in Case 5 is considerably higher than for any of the other three water wash cases, because Case 5 includes 68 large centrifuges, which are expensive, high-speed rotating machines.

Table 5.1-41

CATALYST RECOVERY SCREENING STUDIES
INVESTMENTS FOR WATER WASH CASES

Basis: • January, 1978 Instant Pioneer Plant
• Eastern Illinois Location

Plant Section	Investment Breakdown, Million $			
	Case 2 Water Wash With Filters	Case 3 Water Wash With Gravity Settlers	Case 4 Water Wash With Hydroclones	Case 5 Water Wash With Centrifuges
• Catalyst Recovery				
- Water Wash	62	26	39	96
- Fines Slurry Filtration	3	4	8	9
- Rich Solution Evaporation	10	19	21	15
Subtotal	75	49	68	120
• Changes in Other Onsites				
- Preheat Fired Heaters	Base	0	0	0
- Acid Gas Removal and Sulfur Recovery	Base	0	0	0
- Common Facilities	Base	3	(1)	(1)
- Other	Base	0	0	0
Subtotal	Base	3	(1)	(1)
• Catalyst Related Offsites				
- Catalyst Receipt and Storage	3	3	3	3
- Onsites Waste Solids Handling	12	13	16	13
Subtotal	15	16	19	16
• Changes in Other Offsites	Base	0	0	0
• Allocated Utilities				
- Raw Water/Cooling Water	2	2	2	2
- Steam	5	7	9	6
- Electric Power	2	1	3	8
Subtotal	9	10	14	16
TOTAL DIRECT AND INDIRECT COSTS	99	78	100	151
PROCESS DEVELOPMENT ALLOWANCE (25% of Onsites D&I Costs)	19	13	17	30
PROJECT CONTINGENCY (25% of Total D&I Costs)	25	20	25	38
TOTAL ERECTED COST	143	111	142	219

The economic comparison among Cases 2-5 is presented in Table 5.1-42. Results are shown in terms of 1978 dollars per million Btu's of product SNG (substitute natural gas). As noted above, the economic basis is the same used for the CCG Study Design. These initial screening studies show Case 4, Water Wash with Hydroclones, costing 0.98 $/MBtu, the same as Case 2, Water Wash with (Rotary Drum) Filters. Water wash with centrifuges (Case 5) costs 1.24 $/MBtu, or 0.26 $/MBtu more than either Case 2 or Case 4 and 0.31 $/MBtu more than Case 3 with gravity settlers.

Based on these screening cases, water wash with hydroclones is approximately breakeven with water wash with rotary drum filters and water wash with gravity settlers. However, water wash with centrifuges is considerably more expensive than any of the other three solid-liquid separation alternatives. Therefore, centrifuges were dropped from further study. Rotary drum filters, gravity settlers, and hydroclones were retained in the program for more detailed laboratory and engineering studies.

Case 6: Water Wash With Horizontal Vacuum Belt Filters and Cake Washing

The process basis for Case 6, horizontal vacuum belt filters with cake washing is shown below:

- Solution concentration, wt% K^+
  - Rich catalyst solution 12
  - Concentrated solution from evaporator 23
- Soluble K^+, % of total K fed 70
- Solid-liquid separators
  - Solids in underflow, wt% 30
  - Solids in overflow, wt% 0.2-0.5
  - Solids separation efficiency, % 99

This basis is identical to that of Case 2, Water Wash with Rotary Drum Pressure Filters.

Potential advantages of horizontal belt filters with cake washing are that belt filters utilize the rapid settling properties of the char slurry and that cake washing may reduce the total number of stages. Disadvantages include a lower pressure driving force for filtration and a lower temperature of filtration than Case 2.

A horizontal belt filter consists of a large grooved rubber conveyor-type belt supporting a filter cloth upon which the slurry is applied. Since the direction of filtration is the same direction as gravity, the fast settling property of the char slurry becomes an advantage. After the cake is formed and dewatered, it may be washed to remove residual catalyst solution. This leads to a reduction in the total number of water wash stages. Bench-scale cake washing data reported in Section 5.3 of this report were used to determine the washing effectiveness for the commercial system.

Table 5.1-42

CATALYST RECOVERY SCREENING STUDIES
ECONOMICS FOR WATER WASH CASES

Basis:
- January, 1978 Instant Pioneer Plant, Eastern Illinois Location
- 257 Billion Btu/Stream Day SNG (HHV Basis)
- 90% Capacity Factor
- 100% Equity Financing
- 15% Current Dollar DCF Return
- Escalation Rates:
  - Operating Costs and By-Product Revenues at 5%/Year
  - SNG Revenues at 6%/Year

Catalyst Recovery Cost Components	Cost Breakdown, $/Million Btu SNG			
	Case 2 Water Wash With Filters	Case 3 Water Wash With Gravity Settlers	Case 4 Water Wash With Hydroclones	Case 5 Water Wash With Centrifuges
• Illinois No. 6 Coal @ 20 $/ST	Base	0.000	0.000	0.000
• Major Chemicals				
- KOH Solution @ 300 $/ST KOH	0.578	0.599	0.593	0.592
- Flocculant (D-25A) @ 4200 $/ST	0.030	0.059	-	-
Subtotal	0.608	0.658	0.593	0.592
• Allocated Utilities				
- Raw Water/Cooling Water	0.005	0.005	0.007	0.009
- Steam	0.005	0.007	0.007	0.005
- Electric Power	0.012	0.010	0.024	0.056
Subtotal	0.022	0.022	0.038	0.070
• Other Operating Costs				
- Wages and Benefits	0.028	0.021	0.028	0.051
- Salaries and Benefits	0.009	0.007	0.008	0.016
- Labor Overheads and Supplies	0.007	0.006	0.007	0.014
- Materials and Overheads	0.051	0.037	0.049	0.081
- Waste Solids Disposal @ 1 $/ST	Base	0.000	0.000	0.000
- Filter Medium Replacement	0.001	0.000	0.001	0.001
Subtotal	0.096	0.071	0.093	0.163
• By-Product Revenues				
- Ammonia @ 160 $/ST NH_3	Base	0.000	0.000	0.000
- Sulfur @ 25 $/LT	Base	0.000	0.000	0.000
Subtotal	Base	0.000	0.000	0.000
• Capital Charges	0.256	0.183	0.256	0.415
TOTAL CATALYST-RECOVERY-RELATED COST	0.982	0.934	0.980	1.240
CALL	0.98	0.93	0.98	1.24

The following procedure was used to design the washing section of the vacuum belt filters. The fraction of K^+ remaining in the cake solution is related to the overflow solution and residual cake solution by the following equation:

$$R = \frac{C - Cw}{Co - Cw}$$

where: R is the fraction K^+ remaining in the cake solution after washing.

C, Co, Cw are the concentrations of K^+ in the residual cake solution, the overflow solution, and the wash solution respectively.

R is calculated from cake washing data given the wash ratio for a particular stage. The wash ratio is defined as the wash solution volume divided by the cake solution volume. The overflow solution and wash solution concentrations are then used along with R to determine the residual cake solution concentration. The ratio of the overflow solution concentration to the residual cake solution is the wash efficiency. Figure 5.1-16 shows a typical belt filter washing arrangement. The catalyst solution coming from the leaner leaching stage is used to wash the cake before it slurries the rich solids and is filtered to form the rich solution. The amount of wash solution was set at the total lean catalyst solution which produced wash ratios ranging from 1.5 to 2.0. These wash ratios are commercially representative and maximize wash efficiency while minimizing wash rates which increase belt area.

In addition to wash efficiency, the filtration temperature must also be determined for energy balance and filter design purposes. Since vacuum is being applied to the system, the filtration temperature must be kept below the flash temperature of the solution to minimize the vacuum load. However, reduction of the filtration temperature reduces the filtration rate. Based upon flash temperatures of the catalyst solution, which ranged from 180°F to 190°F for a pressure of 7 psia, the temperature of filtration was set at 160°F to maximize the benefits of temperature on filtration rate and to minimize the adverse effects of solution flashing.

The material and energy balance for Case 6 was completed in January. Table 5.1-43 compares the material and energy balance for Case 6 with that of Case 2. The most striking difference is in the number of stages for the two cases. Case 6, because it included cake washing, required only 6 stages to achieve 95% recovery compared with 10 stages for Case 2. This cut in the number of stages not only reduces the potential for attrition problems in the circuit but also eliminates the investment needed for those extra stages.

The following table compares the filter designs for Case 2 (water wash with pressure rotary drum filters) and Case 6.

FIGURE 5.1-16

HORIZONTAL BELT FILTER WITH CAKE WASHING
(Stage n)

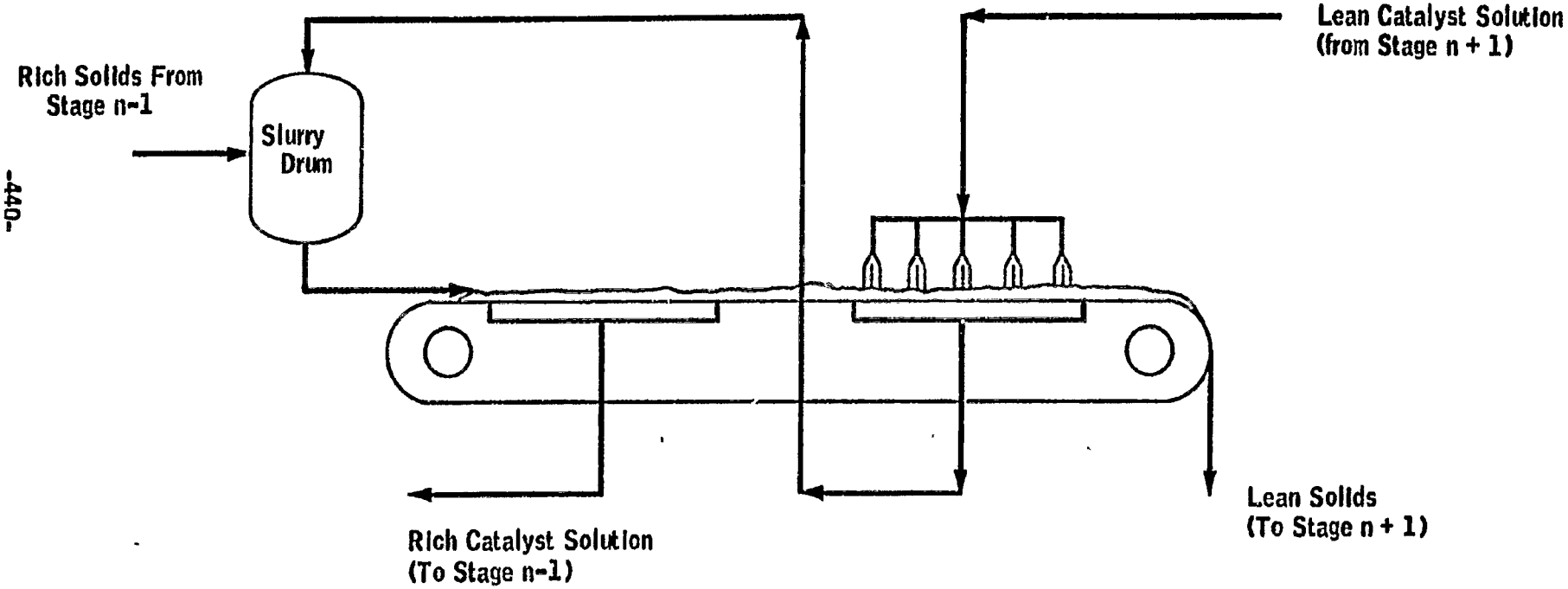

Table 5.1-43

CATALYST RECOVERY SCREENING STUDIES
SUMMARY OF MATERIAL BALANCE RESULTS FOR WATER WASH CASES

Material Balance Result	Case 2 Water Wash With Drum Filters	Case 6 Water Wash With Belt Filters
• Number of Stages in Countercurrent Water Wash	10	6
• Recovery in Water Wash, % of Soluble K^+ Fed	94.9	93.8
• Catalyst Makeup Requirement		
- Percent of Catalyst on Feed Coal	33.9	34.6
- Rate, ST/SD KOH (Dry)	495	506
- Rate, klbs/hr KOH (Dry)	41.3	42.2
• Wash Water Rate, klbs/hr	712	707
• Water Evaporation Requirement, klbs/hr	235	233
• Spent Solids to Disposal, klbs/hr (Dry)		
- From Polishing Filters	14	14
- From Final Stage of Water Wash	200	202
• Total Slurry Feed to Solid-Liquid Separators, klbs/hr		
- To Stage 1	1280	1250
- To Stage 2	1810	1710
- To Stage 3	1750	1650
- To Final Stage	1390	1400

	Case 2	Case 6
Total Area, ft^2	17,000	25,000
Number of Operating Filters	22	40
Average Area/Filter, ft^2	775	625

Case 6 requires nearly 50% more area and twice as many filters than Case 2, even though Case 6 has only six stages compared with ten for Case 2. The reasons for this large filtration area are that the temperature of filtration and the pressure drop for vacuum filters are much lower than those for pressure filters.

Table 5.1-44 compares the investment for Case 6, Water Wash with Belt Filters and Cake Washing to Case 2, Water Wash with Rotary Drum Filters. The water wash section of Case 6 is about 41 M$ more costly than the analogous section in Case 2. The main difference between the two filter cases is that Case 6 has a greater number of more expensive filters. This increased cost of filters is directly responsible for Case 6 being 65 M$ higher in investment than Case 2. The investment for cooling water and electric power for Case 6 is a little higher as well compared to Case 2, because of the vacuum pumps used by the belt filters.

The effects of high investment is clearly represented in the economics shown in Table 5.1-45. The SNG cost for Case 6 is nearly the same as Case 5, Water Wash with Centrifuges, which was eliminated due to high cost. On this basis, it would appear that Case 6 loses its attractiveness compared to the other cases except for Case 5. However, new cake resistance data for PDU solids, not reflected in this study, promises to benefit Case 6 more than Case 2 by enhancing the relative attractiveness of Case 6.

5.1.22 Catalyst Chemistry Studies

Work was initiated on a series of studies to determine the impact of current catalyst chemistry on the catalyst recycle loop. Only a portion of the work needed to complete these studies was finished before the contract ended. These studies will lead to a revised commercial catalyst recovery system flow plan and will evaluate the effect of current data on other sections of the loop. The initial studies in this series will evaluate the need for CO_2 treatment in the CCG process and the potential for buildup of inactive salts in the catalyst loop.

Laboratory results reported earlier in this report identified potassium silicate as having the potential to buildup in the CCG catalyst recycle loop. It was also reported that treatment of CCG char slurries or catalyst solutions with CO_2 was a potential method for reducing the silicate concentration in the catalyst solutions. Additional laboratory results indicated the solubility of silicates can be reduced by slurrying CCG char with catalyst recovery solutions having a pH of about 8. A study was begun to propose possible CO_2 treatment flow plans incorporating this data. The intention of this study was to evaluate how CO_2 treatment fits into the CCG process to guide laboratory studies in this area.

e3742

Table 5.1-44

CATALYST RECOVERY SCREENING STUDIES

INVESTMENTS FOR BELT FILTER CASE

Basis: • January, 1978 Instant Pioneer Plant
• Eastern Illinois Location

Plant Section	Investment Breakdown, Million $ Case 2 Water Wash With Filters	Case 6 Water Wash with Belt Filter and Cake Washing
• Catalyst Recovery(1)		
- Water Wash	62	103
- Fines Slurry Filtration	3	3
- Rich Solution Evaporation	10	10
Subtotal	75	116
• Changes in Other Onsites		
- Preheat Fired Heaters	Base	0
- Acid Gas Removal and Sulfur Recovery	Base	0
- Common Facilities	Base	0
- Others	Base	0
Subtotal	Base	0
• Catalyst-Related Offsites		
- Catalyst Receipt and Storage	3	3
- Onsites Waste Solids Handling	12	12
Subtotal	15	15
• Changes in Other Offsites	Base	0
• Allocated Utilities		
- Raw Water/Cooling Water	2	3
- Steam	5	5
- Electric Power	2	4
Subtotal	9	12
TOTAL DIRECT AND INDIRECT COSTS	99	143
PROCESS DEVELOPMENT ALLOWANCE (25% of Onsites D and I Costs)	19	29
PROJECT CONTINGENCY (25% of Total D and I Costs)	25	36
TOTAL ERECTED COST	143	208

Note:

(1) Catalyst recovery building investments have been adjusted in Case 6 to be consistent with Case 2.

Table 5.1-45

CATALYST RECOVERY SCREENING STUDIES

ECONOMICS FOR BELT FILTER CASES

Basis:
- January, 1978 Instant Pioneer Plant, Eastern Illinois Location
- 257 Billion Btu/Stream Day SNG (HHV Basis)
- 90% Capacity Factor
- 100% Equity Financing
- 15% Current Dollar DCF Return
- Escalation Rates:
  - Operating Costs and By-Product Revenues at 5%/Year
  - SNG Revenues at 6%/Year

Catalyst Recovery Cost Components	Cost Breakdown, $/Million Btu SNG: Case 2 Water Wash With Filters	Case 6 Water Wash with Belt Filters and Cake Washing
• Illinois No. 6 Coal @ 20 $/ST	Base	0.000
• Major Chemicals		
- KOH Solution @ 300 $/ST KOH	0.578	0.591
- Flocculant (D-25A) @ 4200 $/ST	0.030	0.031
Subtotal	0.608	0.621
• Allocated Utilities		
- Raw Water/Cooling Water	0.005	0.005
- Steam	0.005	0.004
- Electric Power	0.012	0.027
Subtotal	0.022	0.036
• Other Operating Costs		
- Wages and Benefits	0.028	0.039
- Salaries and Benefits	0.009	0.012
- Labor Overheads and Supplies	0.007	0.010
- Materials and Overheads	0.051	0.075
- Waste Solids Disposal @ 1 $/ST	Base	0.000
- Fuel Gas (SNG) @ 6.18 $/MBtu	Base	0.000
- Filter Medium Replacement	0.001	0.001
Subtotal	0.096	0.137
• By-Product Revenues		
- Ammonia @ 160 $/ST NH_3	Base	0.000
- Sulfur @ 25 $/LT	Base	0.000
Subtotal	Base	0.000
• Capital Charges	0.256	0.386
TOTAL CATALYST-RECOVERY-RELATED COST	0.982	1.180
CALL	0.98	1.18