HIGH TEMPERATURE EXPANDER LIFE, HAS BEEN MAJOR UNCERTAINTY.

TURBINE EXPANDER LIFE AFFECTED BY:

- QUANTITY OF BED EFFLUX
- SIZE DISTRIBUTION
- CHEMICAL COMPOSITION
- PARTICLE HARDNESS & STICKINESS
- HOT-GAS CLEANUP EFFICIENCY
- MATERIALS OF CONSTRUCTION & TEMPERATURE

1000 HR PFB TURBINE CASCADE TESTS CONDUCTED ≈1979

| FACILITY | CASCADES |
|---|---|
| EXXON | GE |
| CURL | GE & STA LAVAL |

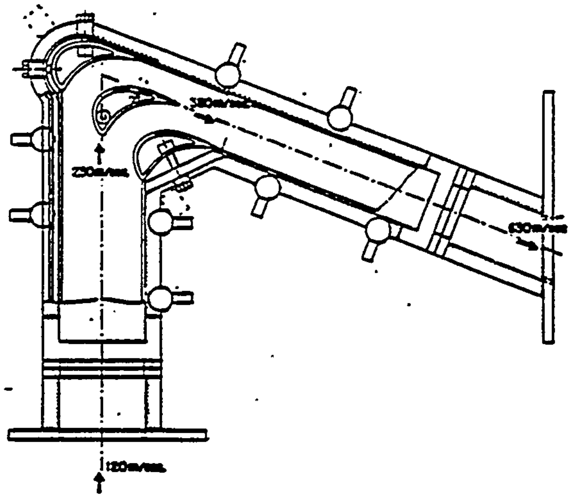

STA-LAVAL CASCADE

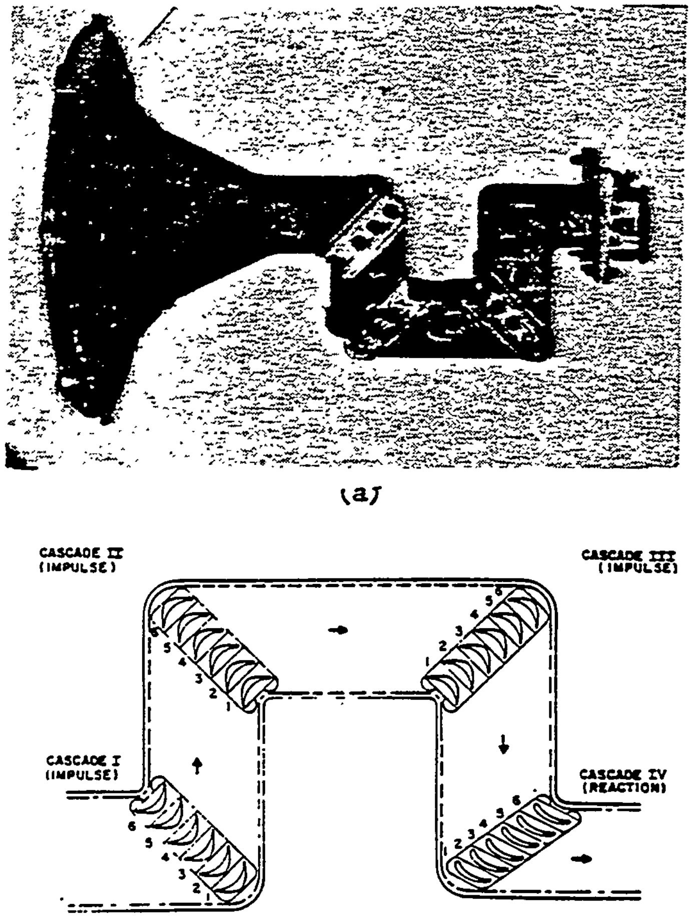

(a)

(b)

GE CASCADE

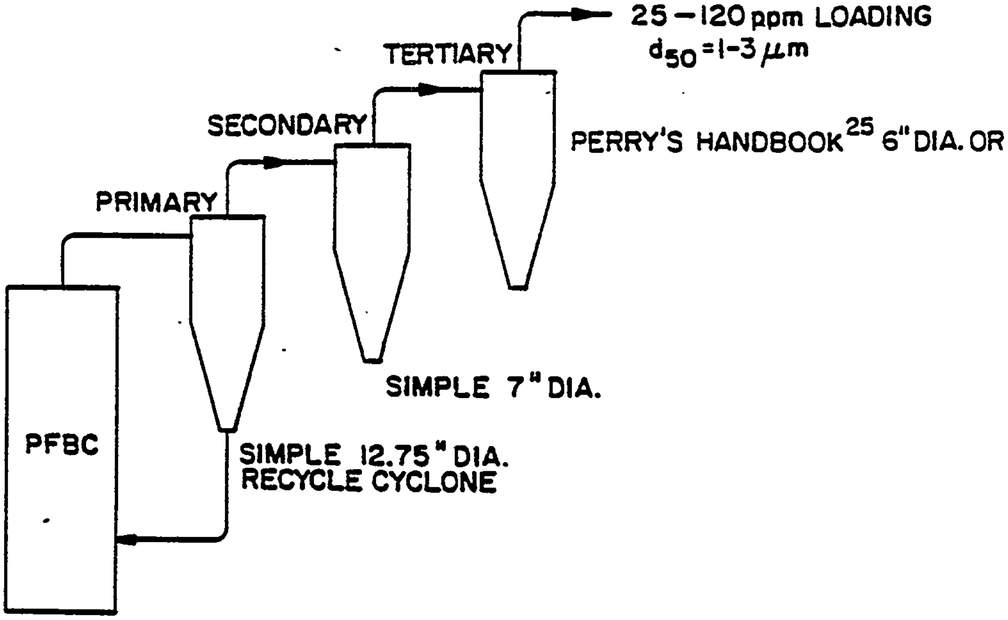

Fig. 4. Exxon PFBC System Schematic.
1 lb/s, 9000 ppm loading,
$d_{50}$ = 20-25 μm

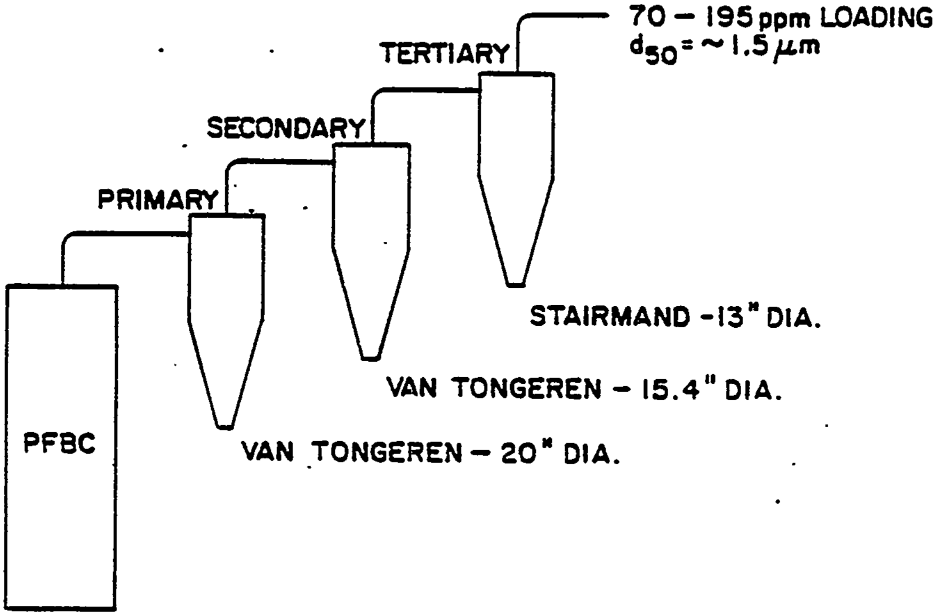

Fig. 5. CURL PFBC System Schematic for Stream 1.
2 lb/s, 11000 ppm loading, $d_{50}$ = 25-40 μm

## NOMINAL PFB CONDITIONS FOR 1000 HR CASCADE TESTS

| EXXON | CONDITION | CURL (GE) |
|---|---|---|
| ILL#6 | Coal | Ohio Glen Brook |
| Pfizer #1337 | Dolomite | Ohio Plum Run |
| 1700°-1770°F | Bed Temperature | 1560°-1585°F |
| 10 Atms | Pressure | 5 Atms |
| 6 Ft./Sec. | Superficial Fluidizing Velocity | 3 Ft./Sec. |
| ~1.8 Sec. | Bed Residence Time | ~2.8 Sec. |
| 3 Cyclones | Particle Separators | 3 Cyclones + Skimmer |
| 35-860 PPM | Particle Loading | ~250 PPM |
| 95% < 10 μm | Particle Size | 99.2% < 10 μm |
| 1500°-1590°F | Specimen Temperature | 1350°-1475°F |
| 900 Ft./Sec. | Maximum Specimen Inlet Velocity | 1400 Ft./Sec. |

# CASCADE TEST IMPACT

## GE FINDINGS

- Exxon corrosion and erosion significantly higher
- Differences due to gas/metal temperatures
- Deposition not a problem
- Long turbine life appears possible

## STA-LAVAL FINDINGS

- No measurable erosion of blade material
- No measurable significant corrosion attack
- Minimal deposition
- Economical turbine life appears possible

## AEP/STA-LAVAL BELIEVE PFB READY FOR DEMONSTRATION

- 170 MW Tidd Plant Preliminary Design
- 15 $MW_T$ CTF Malmo Sweden
  - Full scale 1/36th slice of Tidd
  - 3 stages of proposed cyclones
  - Gas turbine-no load unit
  - Steam to plant turbine
  - Shakedown started Fall 82

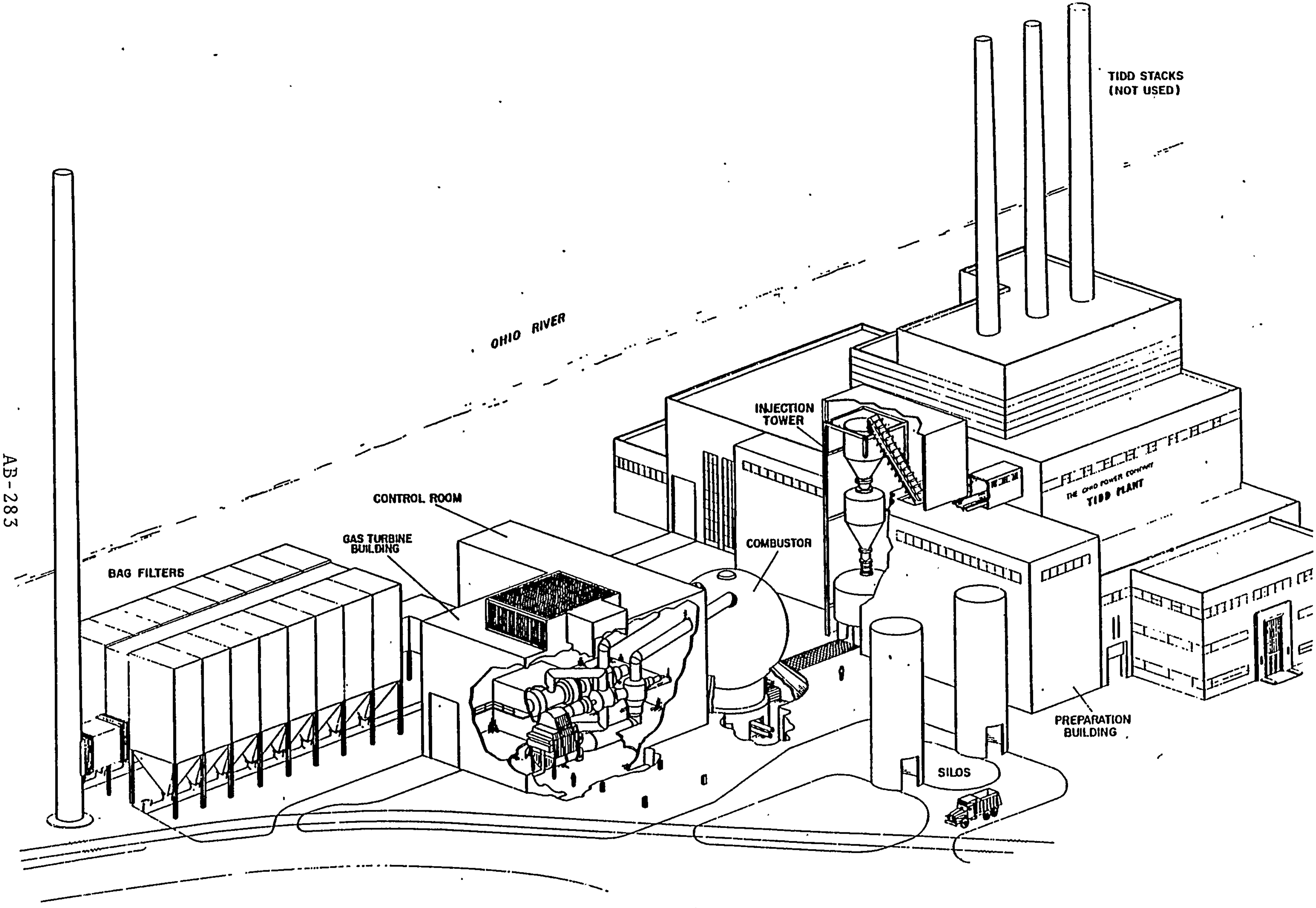

AEP 170MW PFB DEMOPLANT (TIDD)

# EXXON MINIPLANT

## Particulate Concentration in Cyclone Gas Outlet

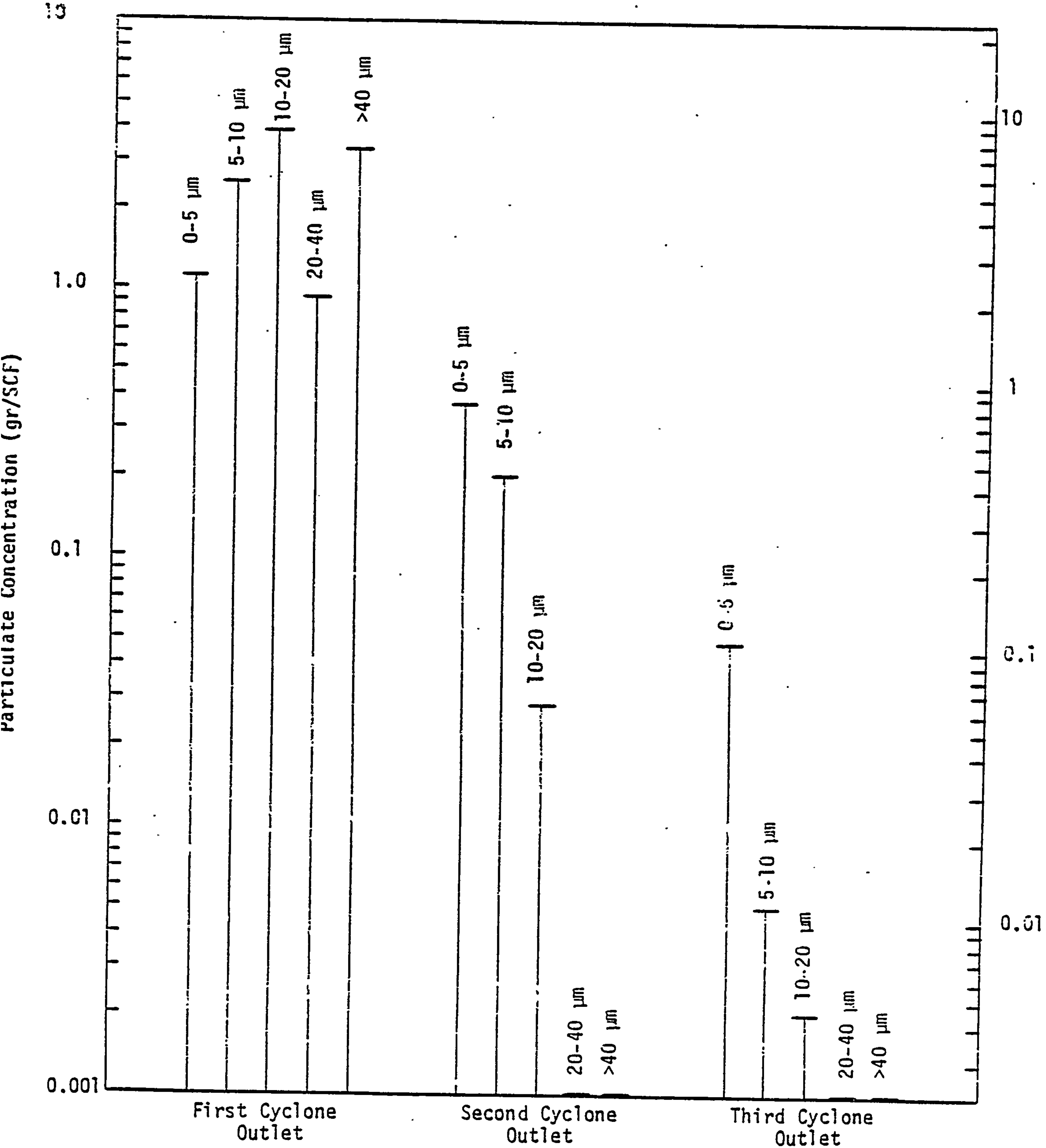

| TOTAL GR./SCF | 11.6 | .600 | .057 |
|---|---|---|---|

# CATCRACKER-PFB CYCLE COMPARISON

CATCRACKER POWER RECOVERY EXPANDERS-4 ATM/1350°F

CATCRACKER ELUTRIATION RATES MUCH HIGHER

CATALYST HARDER AND MORE EROSIVE

3 STAGES OF CYCLONES PROTECT EXPANDER

EXPANDERS COMMERCIALLY GUARANTEED-120 PPM/.06 GR/SCF

AVERAGE TIME BETWEEN BLADING 35000 HRS (IR)

EXPANDER MATERIALS RESISTANT TO ALKALI ATTACK @ 1350-1400°F

LOW RISK PFB CYCLE
  1650°F PFB
  FREEBOARD COOLING TUBES
  1400°F EXPANDER INLET
  INGERSOL-RAND EXPANDER

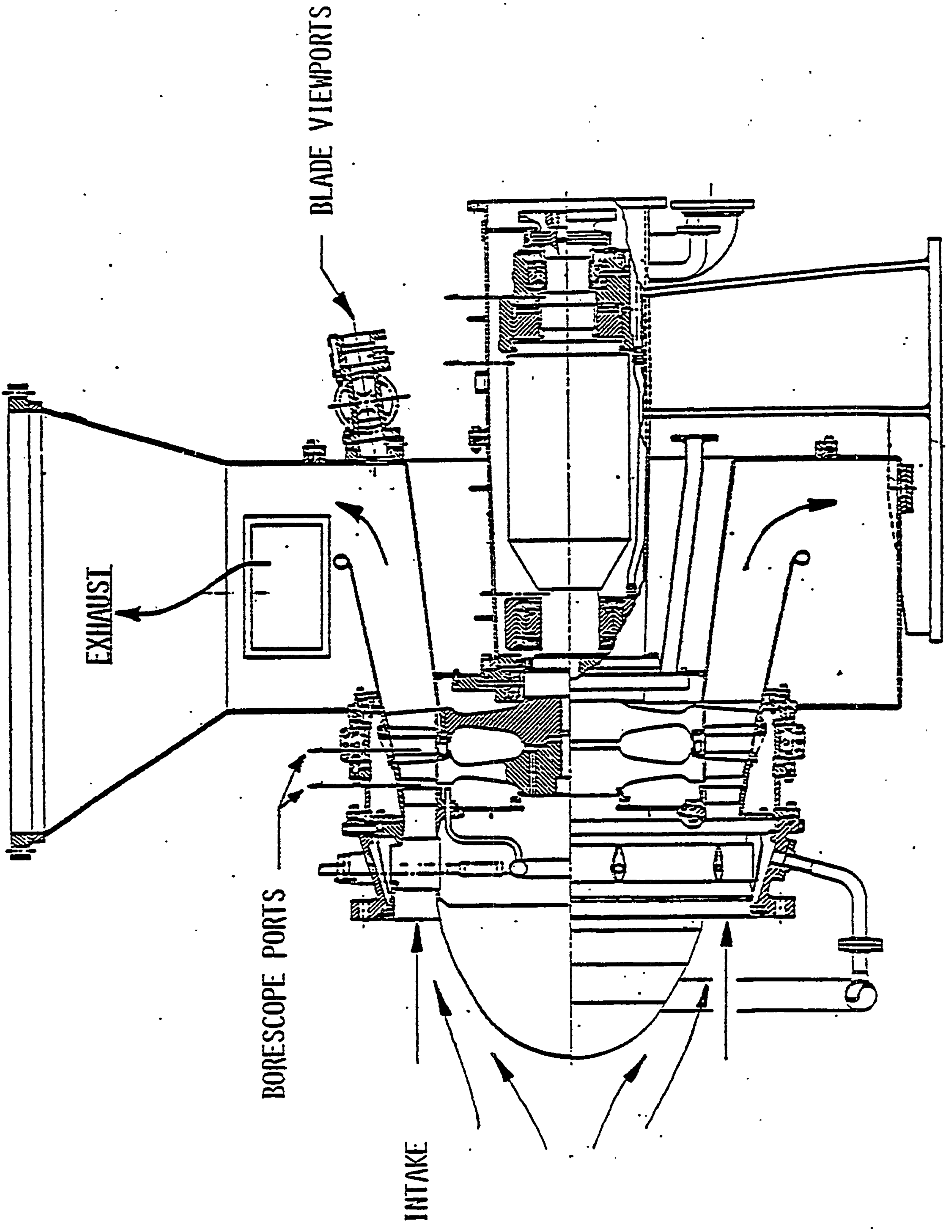

CROSSECTIONAL VIEW OF INGERSOLL-RAND 2-STAGE EXPANDER

# GILBERT/COMMONWEALTH ANALYSIS OF LOW RISK PFB CYCLES

## TABLE II
## CYCLE PERFORMANCE SUMMARY

| | Conventional Coal Fired Power Plant | Steam Cooled PFBC | | Air Cooled PFBC |
|---|---|---|---|---|
| | | Gas Turbine | Expander | Gas Turbine |
| Gross Power, MWe | 533.8 | 446.7 | 506.6 | 501.9 |
| Auxiliary Power, MWe | 36.2 | 7.1 | 9.5 | 9.9 |
| Net Power, MWe | 497.6 | 439.6 | 497.1 | 492.0 |
| Heat Rate, Btu/kWh | 9665 | 8446 | 8979 | 8929 |
| Plant Efficiency, % | 35.3 | 40.4 | 38.0 | 38.2 |

## TABLE III
## CAPITAL COST SUMMARY
## (Costs in millions of 1980 Dollars)

| | Conventional Coal Fired Power Plant | Steam Cooled PFBC | | Air Cooled PFBC |
|---|---|---|---|---|
| Description | 498 MWe | Gas Turbine 439 MWe | Expander 497 MWe | Gas Turbine 492 MWe |
| Land & Land Rights | 1.0 | 1.0 | 1.0 | 1.0 |
| Structures & Improvements | 28.5 | 21.6 | 25.5 | 23.5 |
| Boiler Plant Equipment | 161.3 | 111.0 | 133.8 | 212.6 |
| Gas Turbine/Expander Gen. | - | 22.0 | 31.3 | 65.8 |
| Steam Turbine Generator Unit | 56.7 | 42.6 | 50.4 | 34.5 |
| Accessory Electrical Equipment | 16.5 | 21.0 | 22.6 | 23.9 |
| Misc. Power Plant Equipment | 3.2 | 4.0 | 4.0 | 3.8 |
| Station Equip./Transmission | 6.0 | 6.0 | 6.0 | 6.4 |
| Total Direct Cost | 273.2 | 229.2 | 274.8 | 371.5 |
| Indirect Costs | 297.7 | 242.1 | 287.5 | 353.9 |
| Total Capital Cost | 570.9 | 471.3 | 562.3 | 725.4 |
| $/kW | 1146 | 1074 | 1131 | 1474 |

## TABLE IV
## COST OF ELECTRICITY COMPARISON
## (Costs in mills/kWh, 1980 Dollars)

| | Conventional Coal Fired Power Plant | Steam Cooled PFBC | | Air Cooled PFBC |
|---|---|---|---|---|
| Levelized Busbar Costs | 498 MWe | Gas Turbine 439 MWe | Expander 497 MWe | Gas Turbine 492 MWe |
| Capital Cost | 33.6 | 31.5 | 33.2 | 43.2 |
| Fuel Cost | 42.8 | 37.3 | 39.7 | 39.5 |
| Fixed O&M | 6.7 | 6.1 | 6.4 | 9.4 |
| Variable O&M | 5.3 | 8.0 | 8.3 | 5.6 |
| Reliability Penalty | 5.4 | 4.6 | 4.6 | 3.4 |
| Total COE | 93.7 | 87.5 | 92.2 | 101.1 |

# BROWN BOVERI-EPRI STUDY

| CYCLE | BED COOLANT | PRESSURE (ATM) | GAS TURBINE TEMP. (°F) | EFFICIENCY % | COMMENTS |
|---|---|---|---|---|---|
| A | Water/ Steam | 10 | 1560 | 40.0 | |
| B | Water/ Steam | 5 | 1300 | 38.6 | Cat Cracker Type Expander |
| C | Air | 7 | 1600 | 33.6 | |
| E | Water/ Steam | 10 | 770 | 38.0 | Self Sustaining |

SELF SUSTAINING/TURBO CHARGED PFB HAS LOWEST CAPITAL COSTS AND LOWEST RISK

Minimum hot gas volumetric flow

Hot gas piping and clean up conventional

Minimum gas turbine over speed protection

No HRSG

TURBO CHARGED PFB COE 10% LOWER THAN HIGH TEMPERATURE CYCLES

EPRI TO AWARD CONTRACT FOR MORE DETAILED STUDY

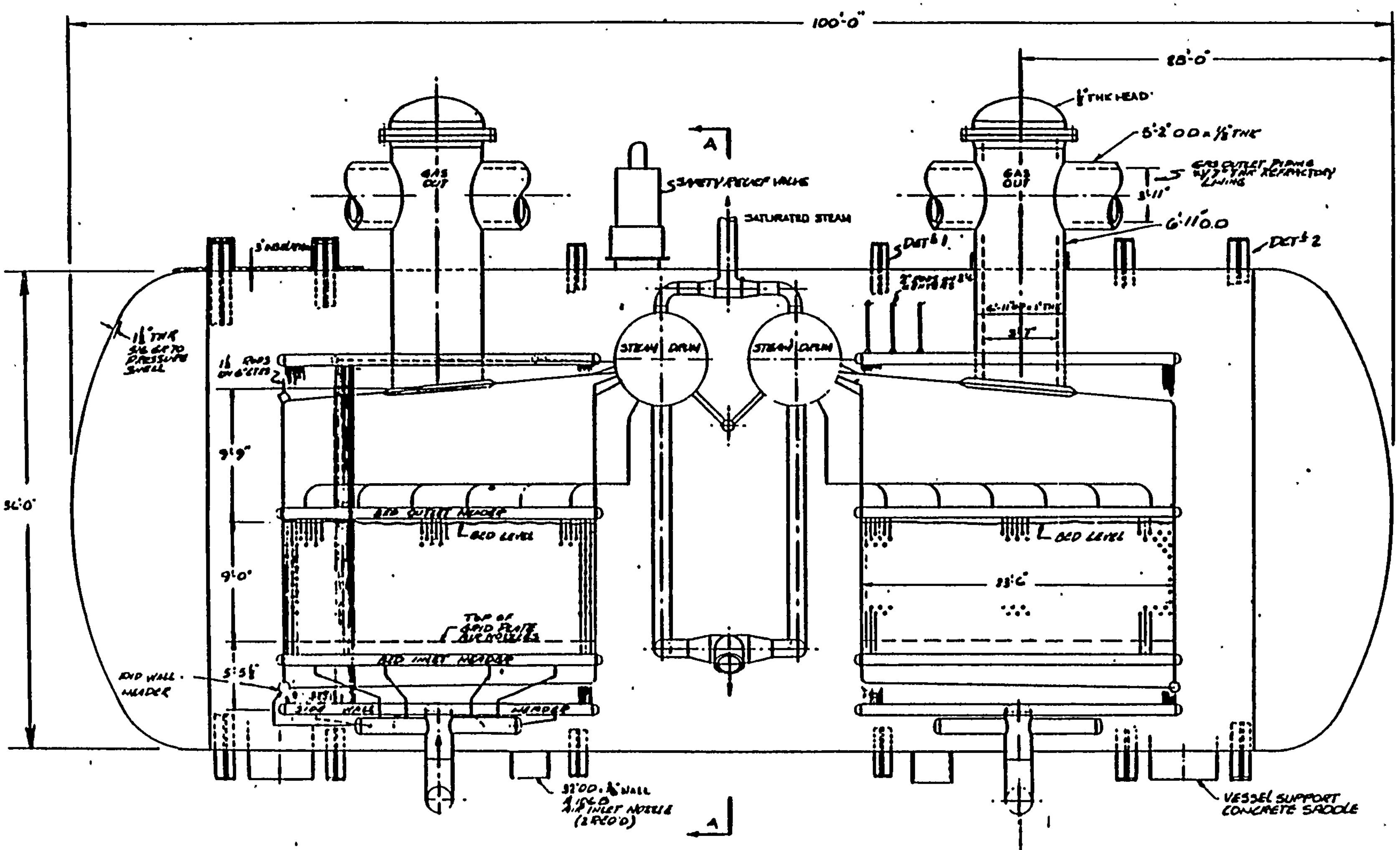

SIDE ELEVATION

250 MW PFB STEAM GENERATOR

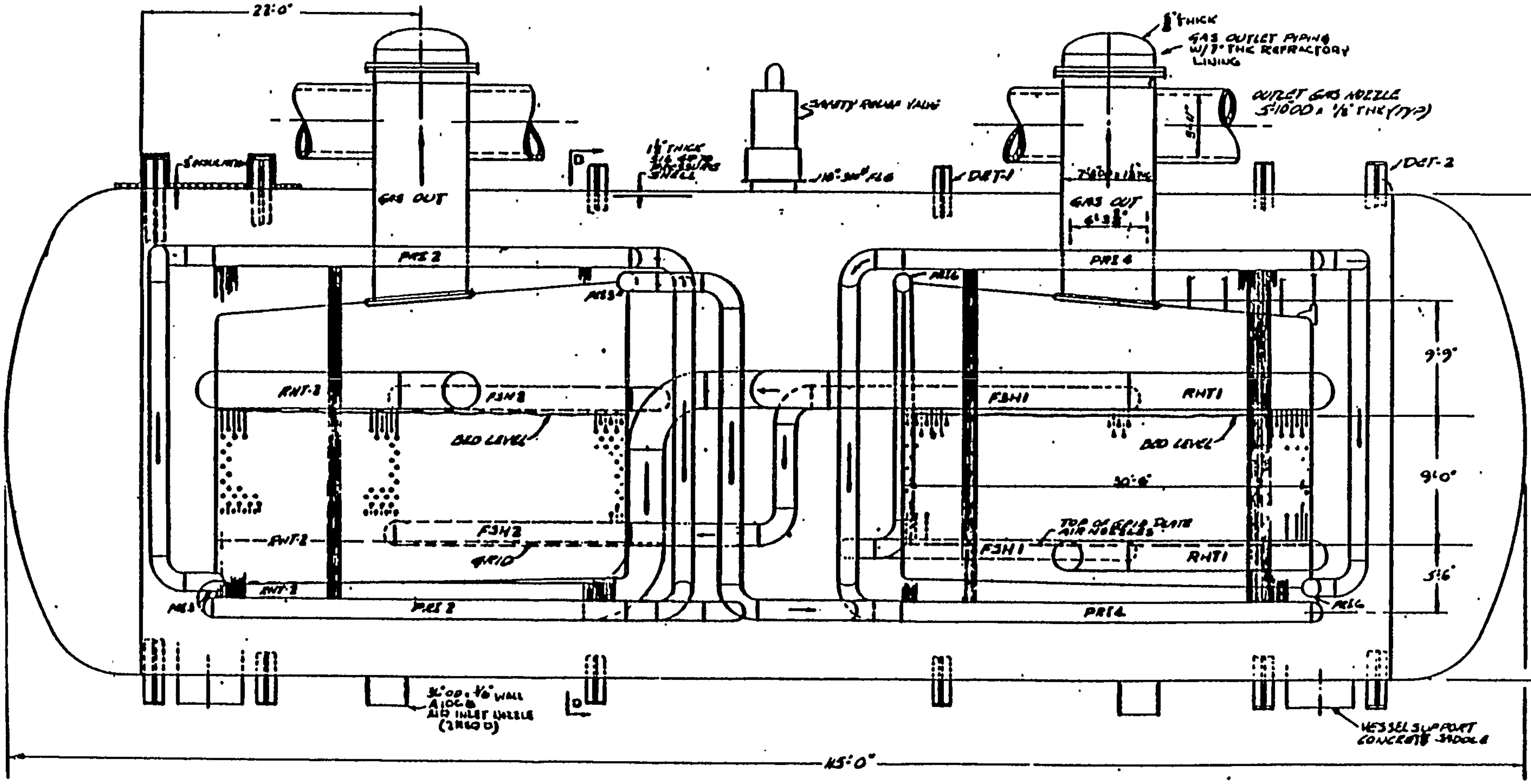

ELEVATION

250 MW PFB SUPERHEATER-REHEATER

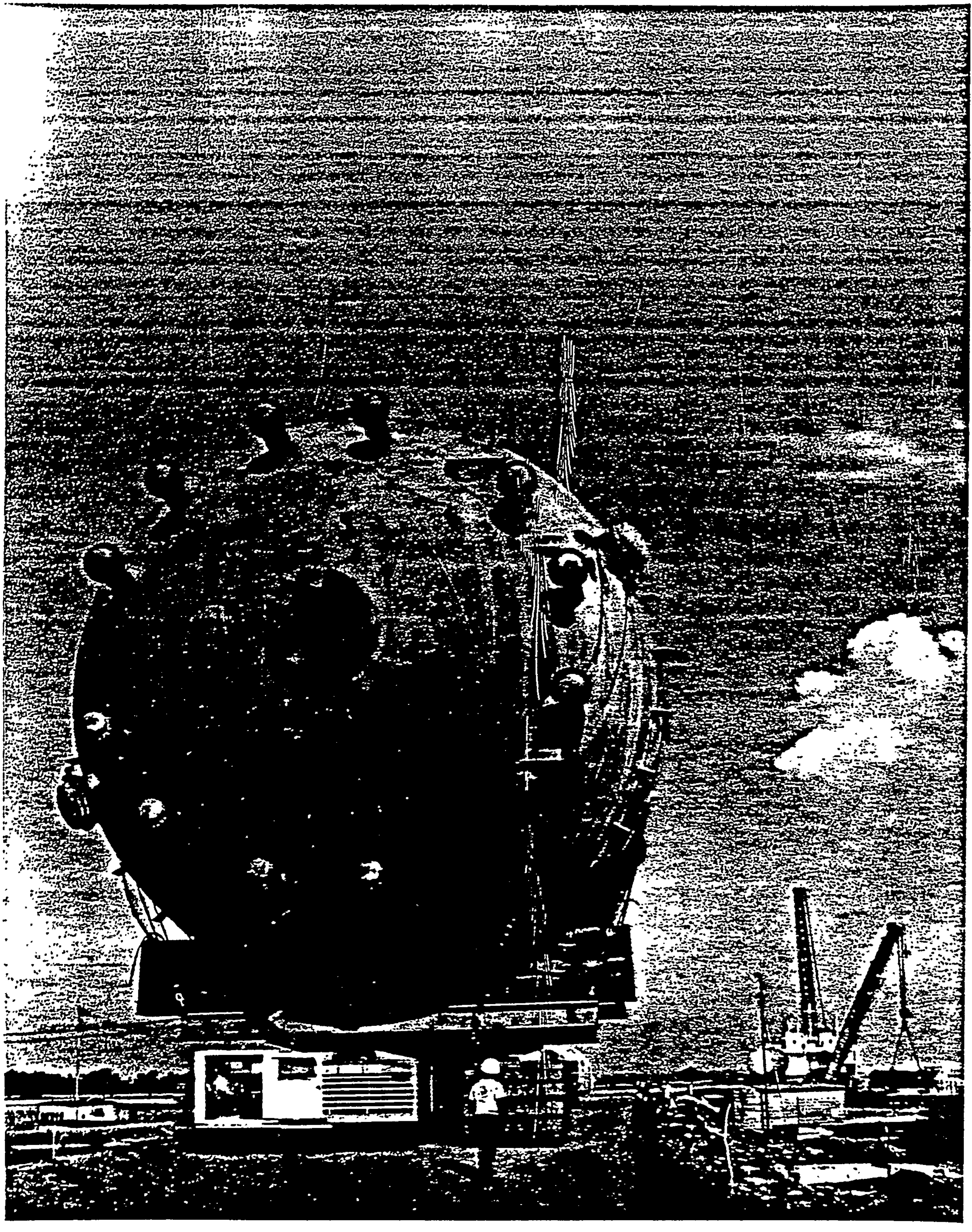

36′ OD-400 TON CATCRACKER REGENERATOR AB-291

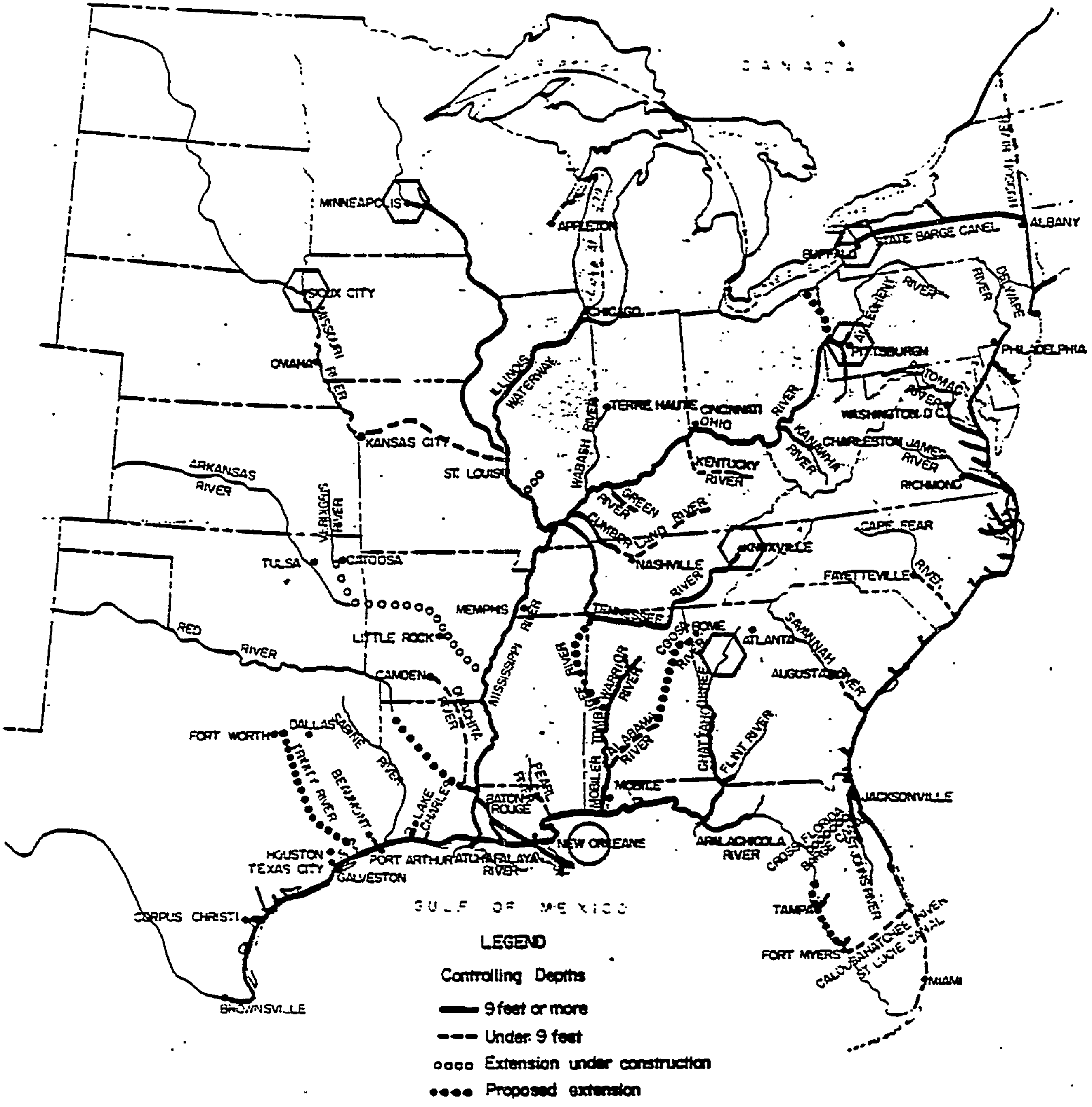

125MW SHOP ASSEMBLED PFB BARGE SHIPMENT

# GRIMETHORPE PFB

75 $MW_T$ EXPERIMENTAL FACILITY-COMPLETED 1980

BED CONDITIONS

6'-7" SQUARE
6-12 ATM
1470-1750°F
8 FT/SEC. NOMINAL

TUBE BANK "A" - 858 HRS OPERATION OCT.-DEC. 81
1-1/4" OD ON 3-1/8" TP
11'-6" TALL (14 1/2% PACKING DENSITY)
6.7 FT/SEC.
240°F ΔT - BED HEIGHT 12.8 FT
ERATIC COAL FEED - ROTARY VALVES ± 27°F

TUBE BANK "C" - 469 HRS OPERATION JUNE-SEPT. 82
1-5/16" OD ON 3-1/8" Vx7" H
10'-6" TALL (6.3% PACKING DENSITY)
4.9-6.6 FT/SEC.
NO ΔT PROBLEM (15.4' BED DEPTH)
SEVERE EROSION BOTTOMMOST TUBES

# CURL/LEATHERHEAD

COAL-WATER SLURRY TESTS SUCCESSFUL
- 25-35% WATER
- 99% COMBUSTION EFFICIENCY
- 87% SRE @ 1.8 CA/S AND 1 SEC.
- 30% WATER .7% CYCLE EFFICIENCY REDUCTION

20 ATM PFB TESTS
- SLIGHT INCREASE IN COMBUSTION EFFICIENCY
- SRE NOT SENSITIVE
- $NO_X$ EMISSION NOT SENSITIVE

RUN OF MINE COAL
- 98 TO 99-1/2% COMBUSTION EFFICIENCY
- 85% SRE @ 1.5 CA/S AND 1 SEC.
- 4% BED CARBON CONTENT
- LARGE STONE ACCUMULATION

# HOT GAS CLEANUP

AT THE PRESENT, CYCLONE SEPARATORS REPRESENT THE ONLY COMMERCIAL TECHNOLOGY FOR REMOVING PFB PARTICULATES.

ADVANCED DEVICES ARE UNDER DEVELOPMENT:

- CERAMIC BAGHOUSE FILTERS
- CERAMIC BLOCK FILTERS
- ELECTROSTIC PRECIPITATORS
- ELECTRO CYCLONES
- GRANULAR BED FILTERS

CURTISS WRIGHT
POWER SYSTEMS

PRESENTATION ON

# CURTISS-WRIGHT
# PRESSURIZED FLUIDIZED BED PILOT PLANT

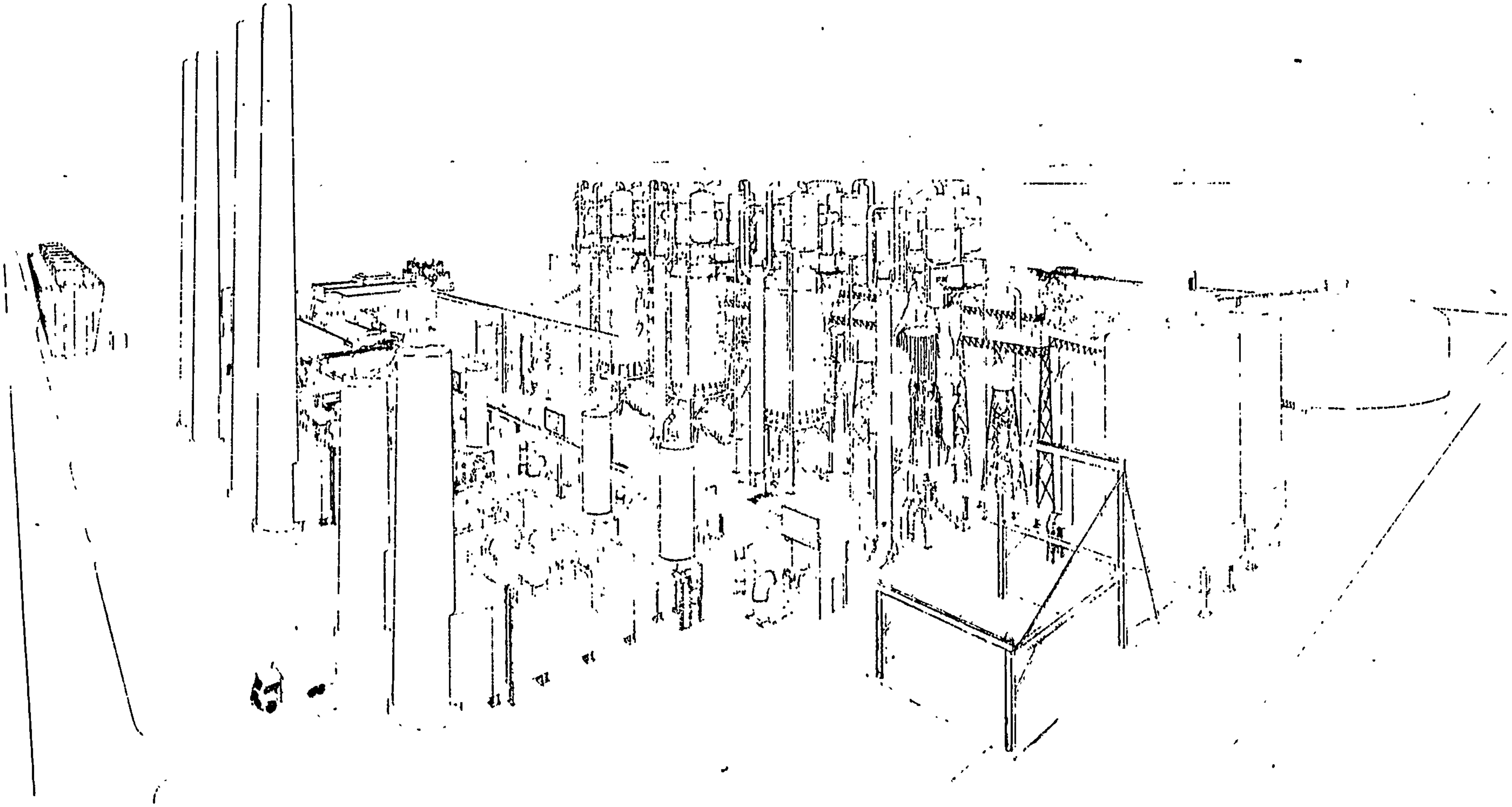

# PFB OVERVIEW

# PFB AIR HEATER SYSTEM DESIGN

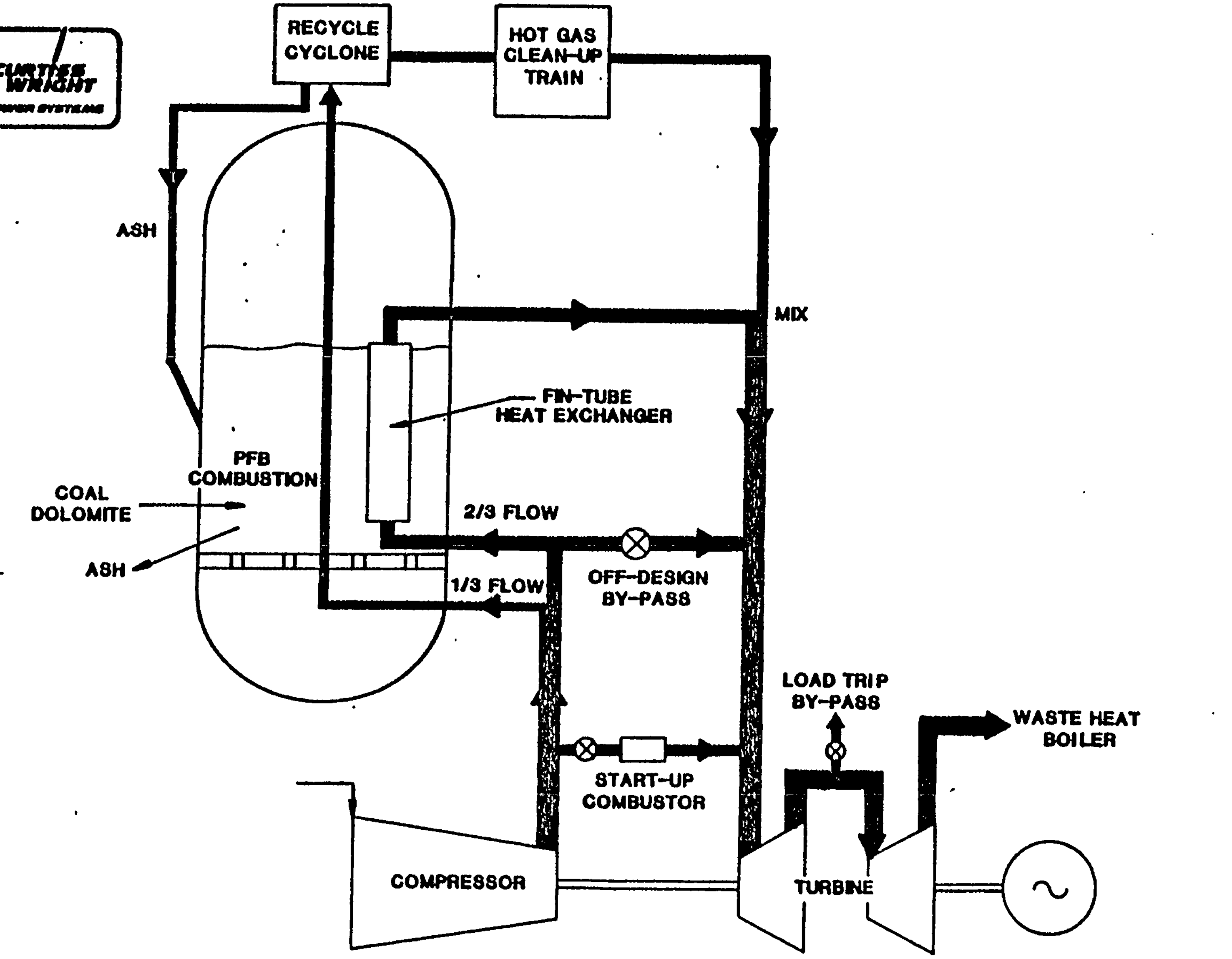

PFB-I-533C

# 500 MW PFB - COMBINED CYCLE PLANT
# MODULAR ARRANGEMENT

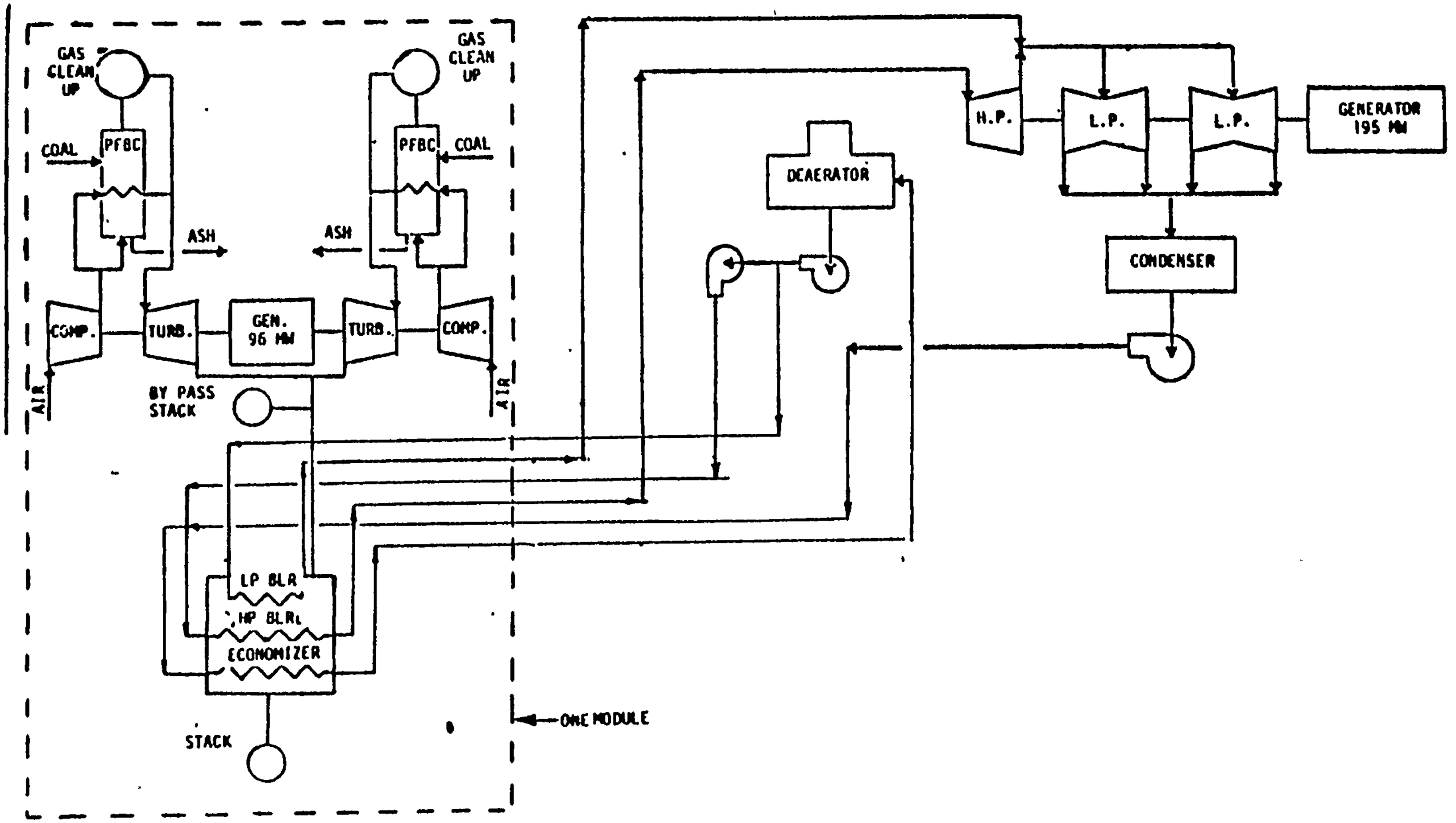

PFB-III-687A

# COMMERCIAL PLANT
## NOMINAL PERFORMANCE

| | |
|---|---|
| Heat Rate | 8600 BTU/KW HR |
| Coal Pile to Busbar Efficiency | 40% |

### *Modular Plant Design*

| | |
|---|---|
| ● 3 Gas Turbine Modules<br>Each Containing, 2 PFB, 2 GT,<br>1 Alternator | 3 x 110 MW |
| ● 1 Steam Turbine | 180 MW |
| | 510 MW |

PFB-III-604B

## BENEFITS OF AIR HEATER FBC SYSTEMS

- FUEL FLEXIBILITY
- HIGHER PLANT EFFICIENCY
- REDUCED WATER REQUIREMENTS
- LOWER $SO_2$ AND $NO_x$ EMISSIONS
- EASIER TO DISPOSE ASH
- LOWER CAPITAL COST
- LOWER COST OF ELECTRICITY
- MODULAR SYSTEM
    - SHORTER CONSTRUCTION CYCLE
    - HIGHER AVAILABILITY
    - OPERATING FLEXIBILITY
- WIDER APPLICATIONS
    - BASE AND INTERMEDIATE
    - PEAKING
    - COGENERATION

PFB-III-639A

# 500 MW PFB MODULAR COMMERCIAL PLANT

## TURN DOWN CAPABILITY

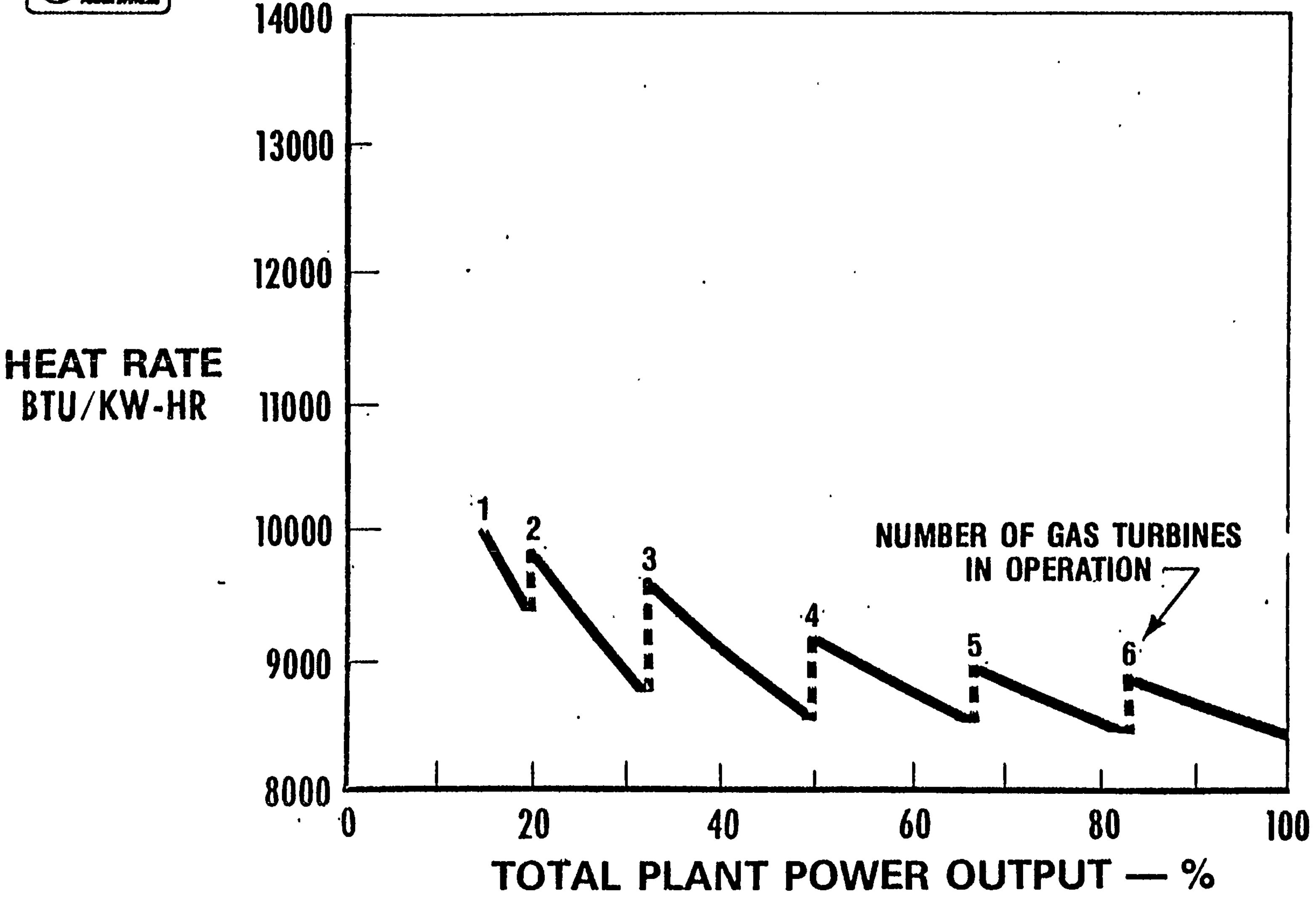

PFB-II-390 A

## 500 MW MODULAR COMMERCIAL PLANT

## POWER AVAILABILITY DURING MAINTENANCE

| UNAVAILABLE ITEMS | POWER AVAILABILITY PERCENT | HEAT RATE BTU/KW HR |
|---|---|---|
| GAS TURBINE | 83 | 8600 |
| PFB/HOT GAS CLEANUP | 83 | 8600 |
| WASTE HEAT BOILER | 83-93* | 8600-9140* |
| STEAM TURBINE | 60 | 14,240 |
| ST ALTERNATOR | 60 | 14,240 |
| GT ALTERNATOR | 66 | 8,620 |

* INCLUDES ONE GAS TURBINE IN SIMPLE CYCLE MODE

PFB-I-567C

# COMBINED CYCLE POWER PLANT SIMPLIFIED FLOW DIAGRAM

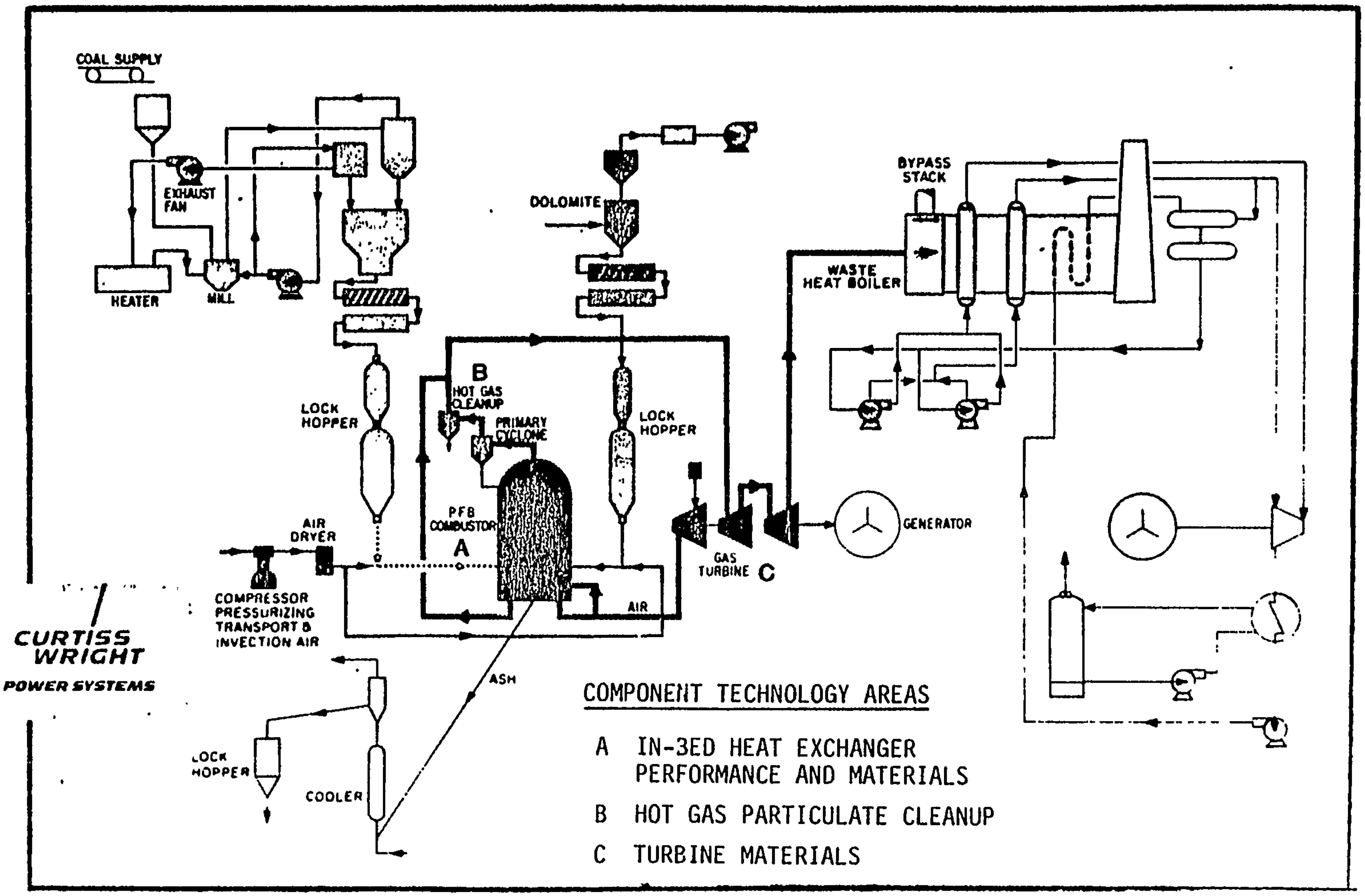

COMPONENT TECHNOLOGY AREAS

- A IN-BED HEAT EXCHANGER PERFORMANCE AND MATERIALS
- B HOT GAS PARTICULATE CLEANUP
- C TURBINE MATERIALS

CURTISS WRIGHT
POWER SYSTEMS

PFB-I-554C

# PFB PROGRAM PLAN

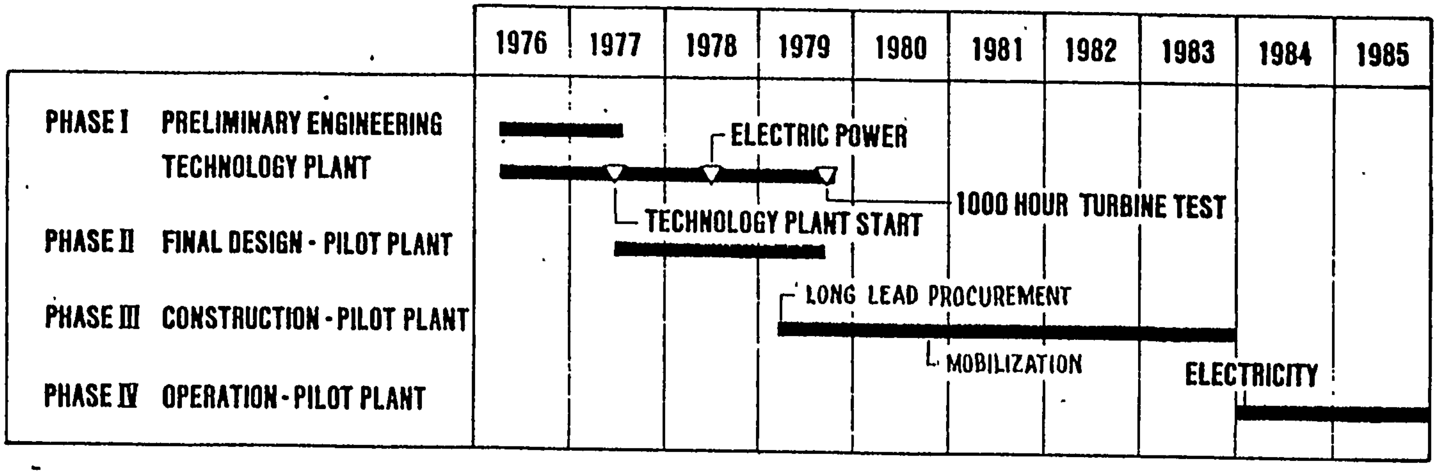

PFB-III-775H

# TECHNOLOGY SUPPORT TESTS

## SUMMARY OF TECHNOLOGY SUPPORT TESTS

| | |
|---|---|
| ● HEAT TRANSFER CHARACTERISTICS OF IN-BED HEAT EXCHANGER TUBES | 600 HOURS |
| FBC LABORATORY RIG | |
| ● HEAT EXCHANGER TUBE MATERIALS DURABILITY | 8000 HOURS |
| COMMERCIAL FLUID BED CALCINER<br>FBC LABORATORY RIG | |
| ● TURBINE AND TUBE MATERIALS DURABILITY AND PFB OPERATING PARAMETERS FOR COMBUSTION/EMISSIONS | 3500 HOURS |
| LARGE SCALE PFB TECHNOLOGY PLANT | |
| TOTAL | 12,100 HOURS |

PFB-III-808

# TECHNOLOGY UNIT

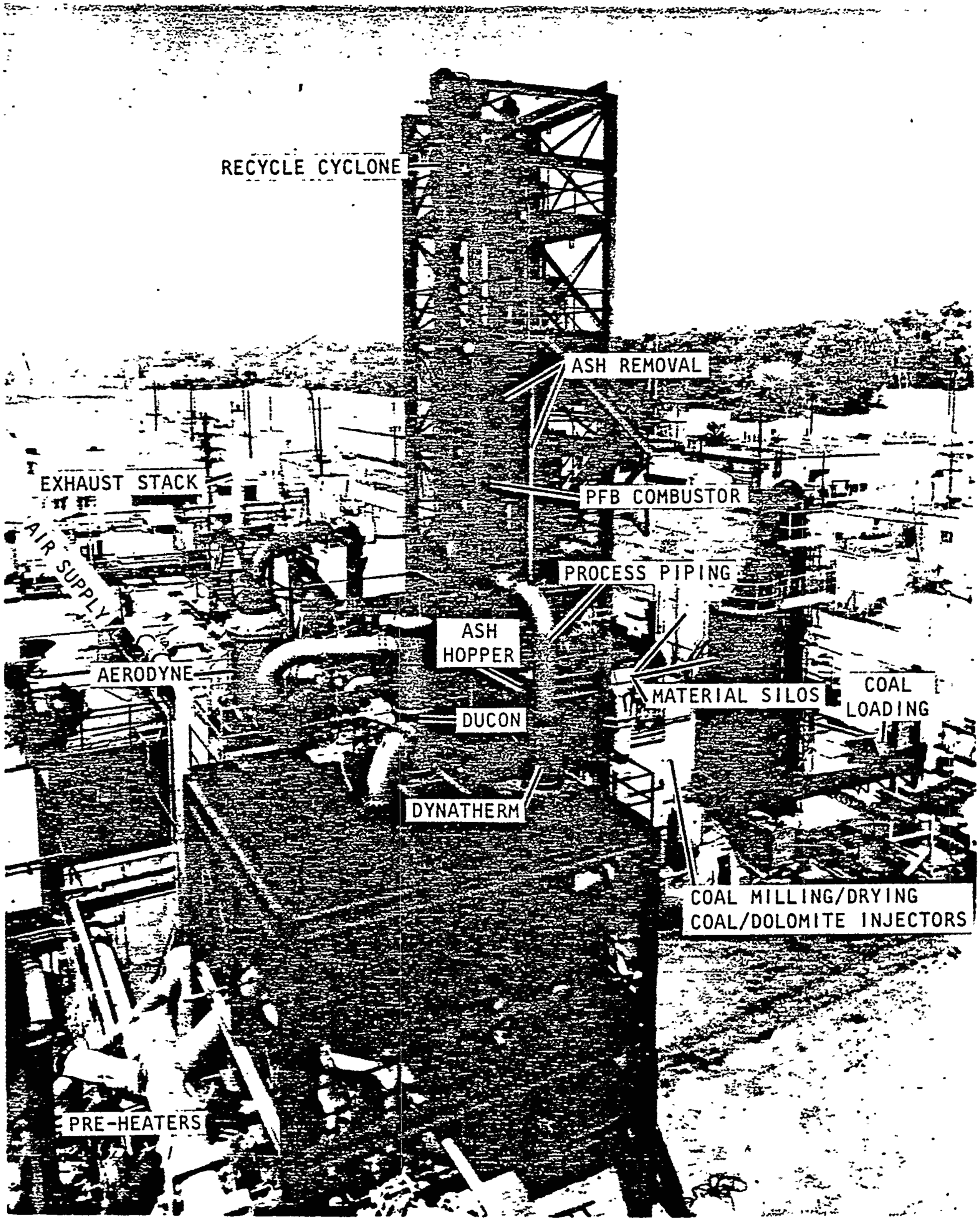

# SMALL GAS TURBINE RIG
## DISTRIBUTOR AND HEAT EXCHANGER ASSEMBLY

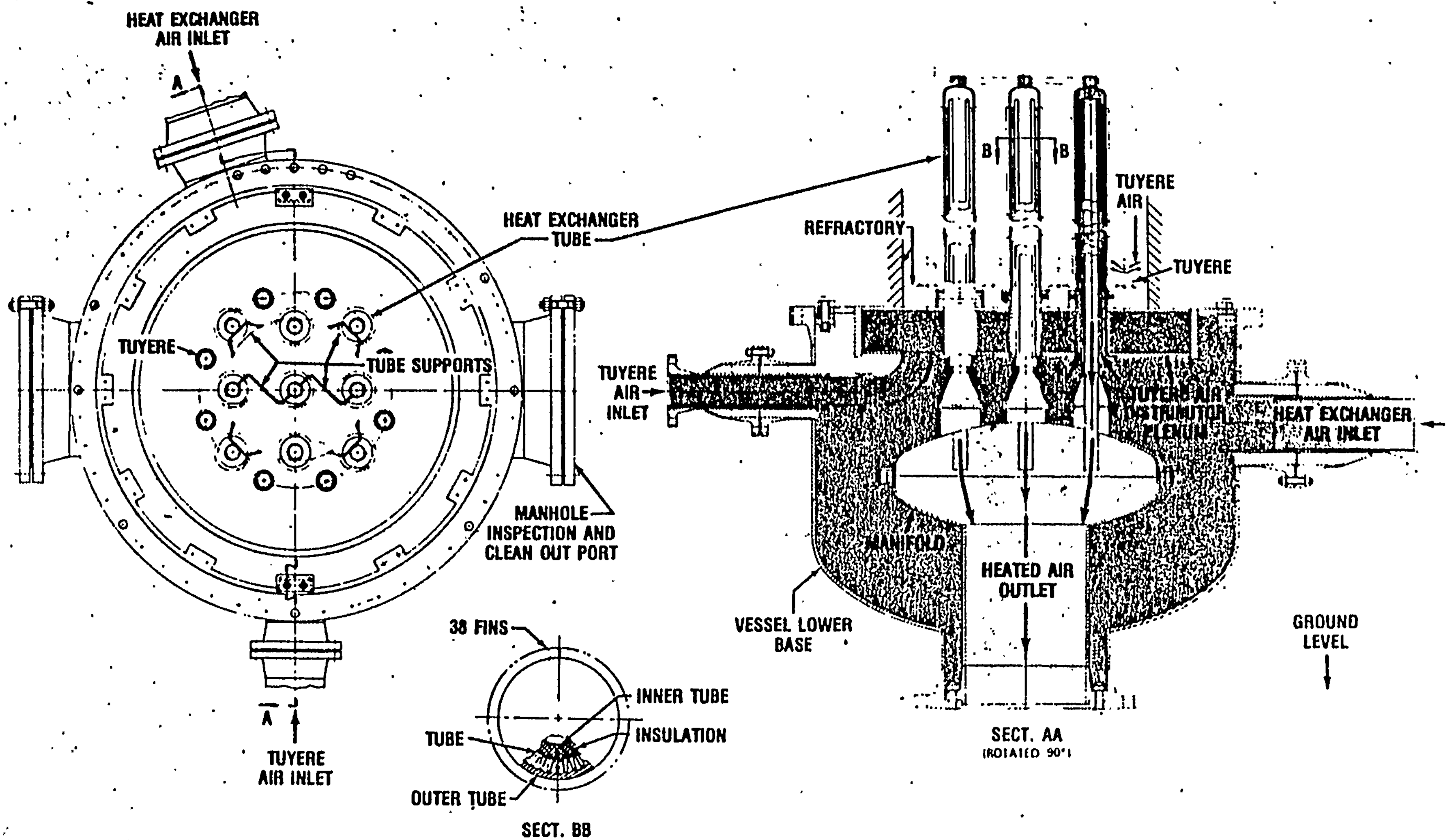

PFB-I-555

# HEAT EXCHANGER TUBES BEING INSERTED IN PFB COMBUSTOR

AB-310

# PFB HEAT EXCHANGER TUBE MATERIALS
# SUMMARY OF RESULTS
## 2000 HOUR EXPOSURE OF COUPONS IN SGT/PFB COMBUSTOR

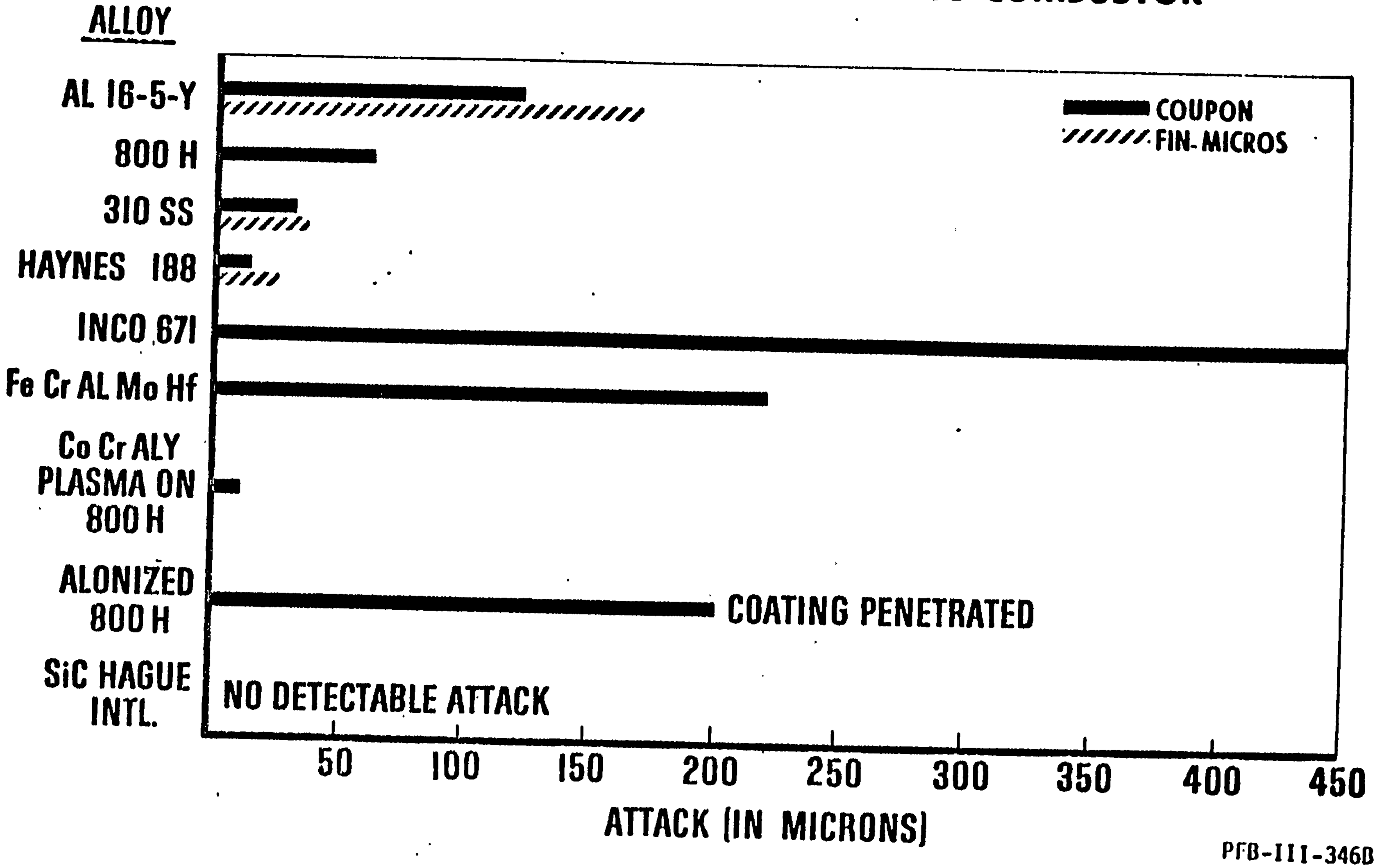

PFB-III-346B

# ROVER STATOR AND ROTOR AFTER COMPLETION OF THE 1000 HOUR TEST

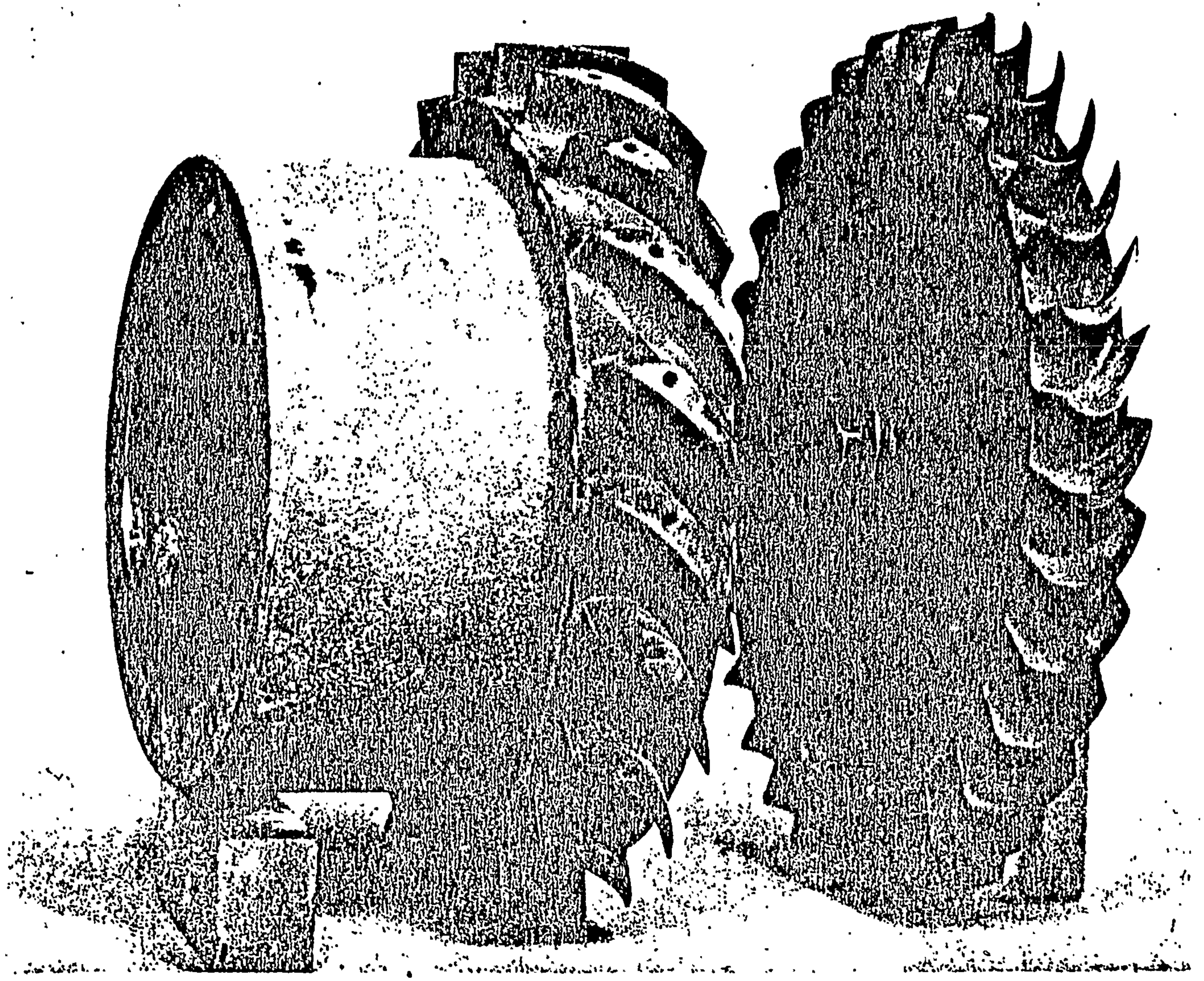

PFB-III-265-S

# PHOTOMICROGRAPH OF Fe Cr Al-Y COATING ON ROVER VANE
## After 1000 Hour Test

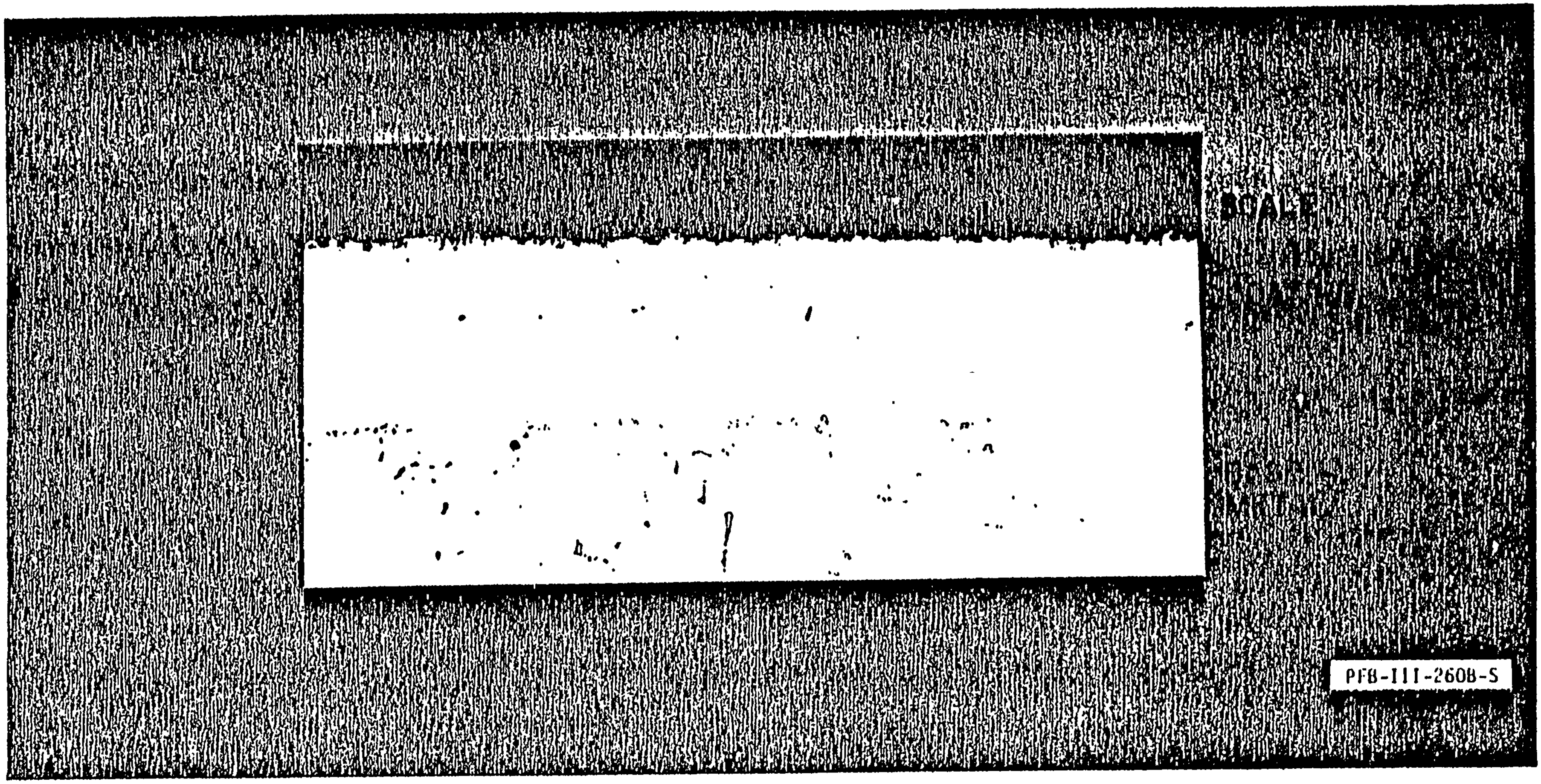

# PFB COMBINED CYCLE EMISSION SUMMARY

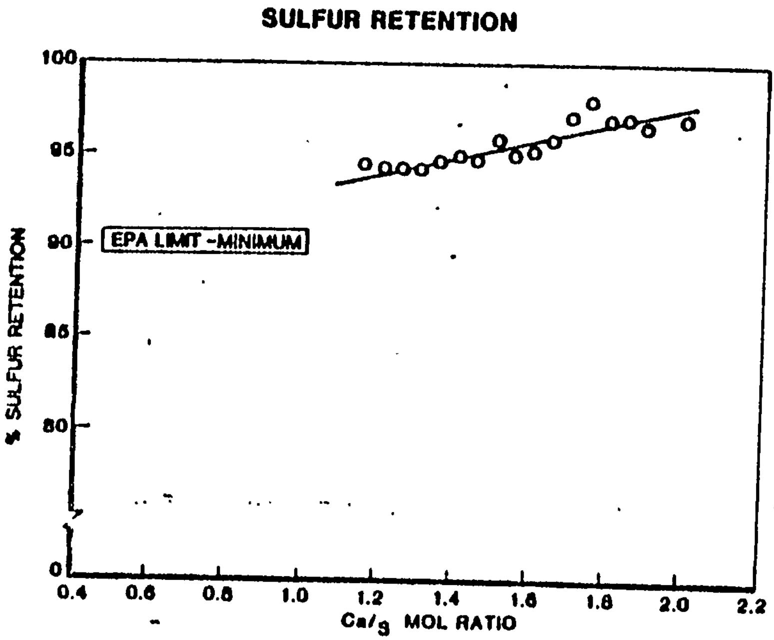

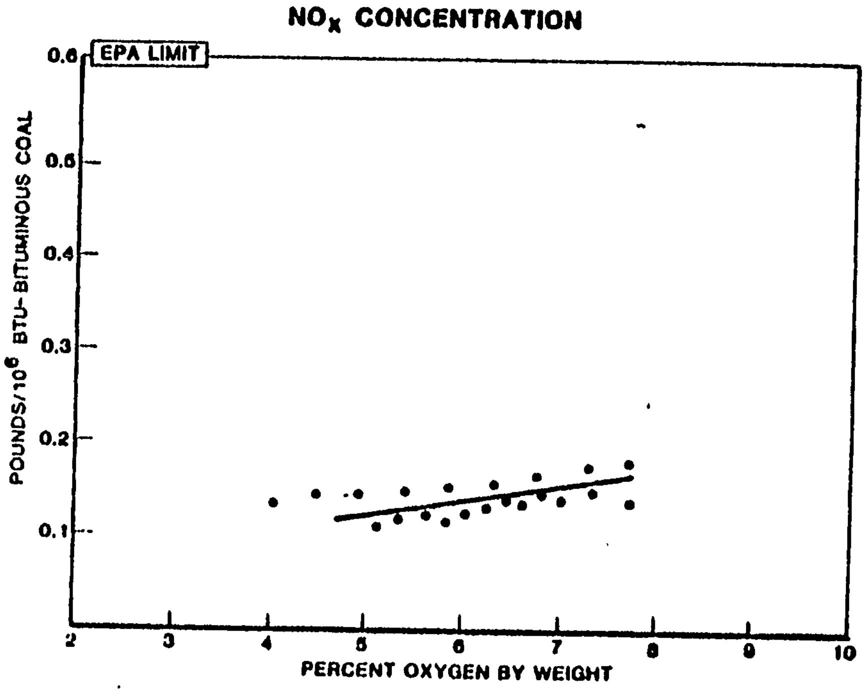

PFB-III-645

# HOT GAS CLEANUP SYSTEMS

**CERAMIC FELT BAG**

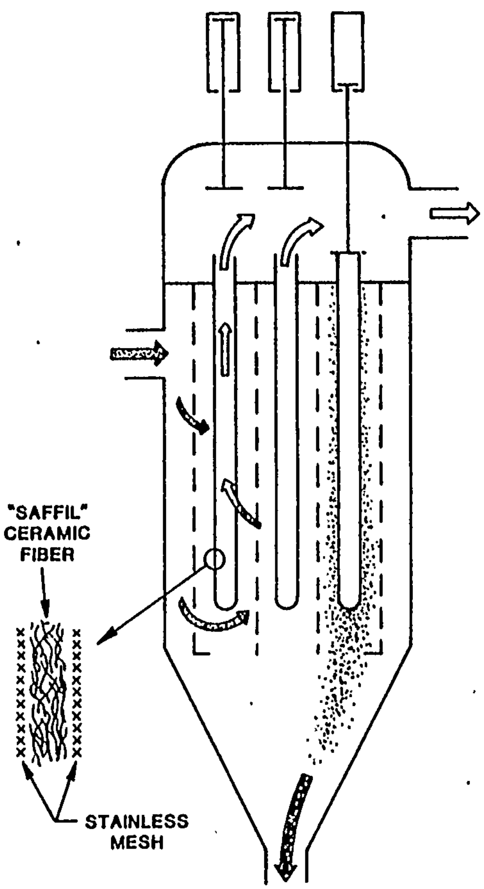

**ACUREX**

**ELECTROSTATIC PRECIPITATOR**

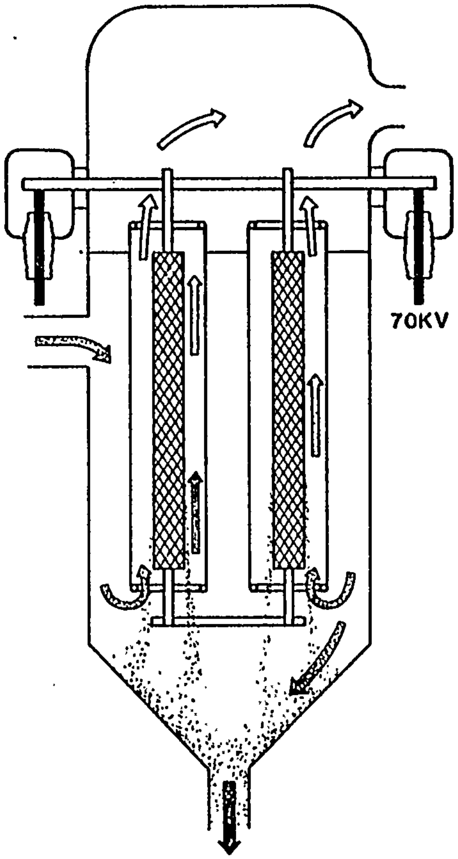

**RESEARCH COTTRELL**

**ELECTRO CYCLONE**

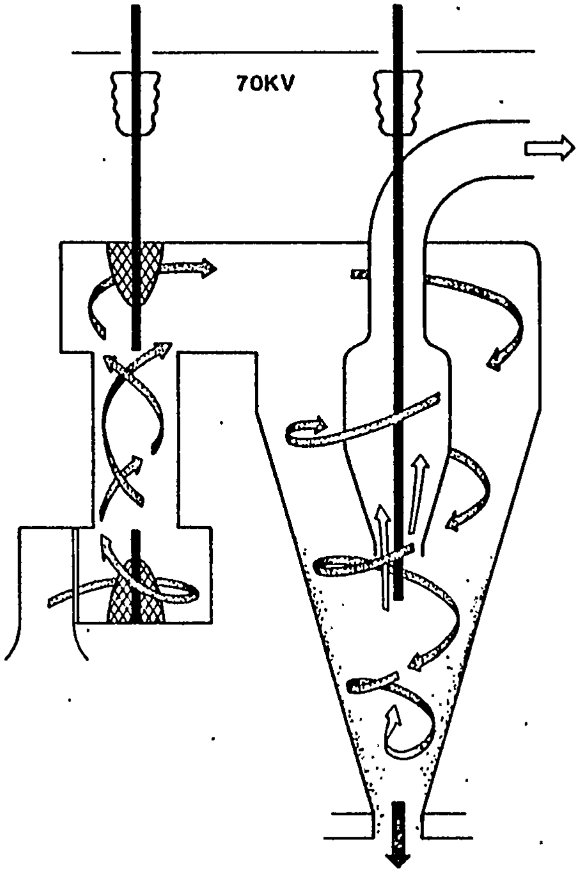

**GENERAL ELECTRIC**

PFB-P-57

# TEST PLANT ACCOMPLISHMENTS

- Over 3500 Hours of Coal Fired PFB Operation
- Over 1300 Hours of PFB/Gas Turbine Operation
- Verified Design Parameters/Material Selections
- Demonstrated High Combustion Efficiency (>99%)
- Demonstrated High Sulfur Capture (>95%, <0.3 lb/mm Btu)
- Demonstrated Low $NO_x$ Production ( <0.2 lb/mm Btu)
- Demonstrated Acceptability of Heat Exchanger Materials
- Developed Reliable Coal/Dolomite Feed Systems
- Developed Adequate Hot Gas Cleanup System for Turbine Protection

PFB-III-603

# PFB PILOT PLANT

# PFB PILOT PLANT DESIGN POINT

| | |
|---|---|
| EQUIVALENT ELECTRIC POWER FROM G.T. | 7150 KW |
| EQUIVALENT ELECTRIC POWER FROM STEAM | 6470 KW |
| EQUIVALENT HEAT RATE | 8725 BTU/KW/HR |
| COAL FLOW | 10,240 PPH |
| AIRFLOW | 120 PPS |
| STEAM GENERATED AT 175 PSIG | 58,000 PPH |

PFB-II-384B

# WOOD-RIDGE FACILITY
# CURTISS-WRIGHT CORPORATION

CURTISS WRIGHT
POWER SYSTEMS

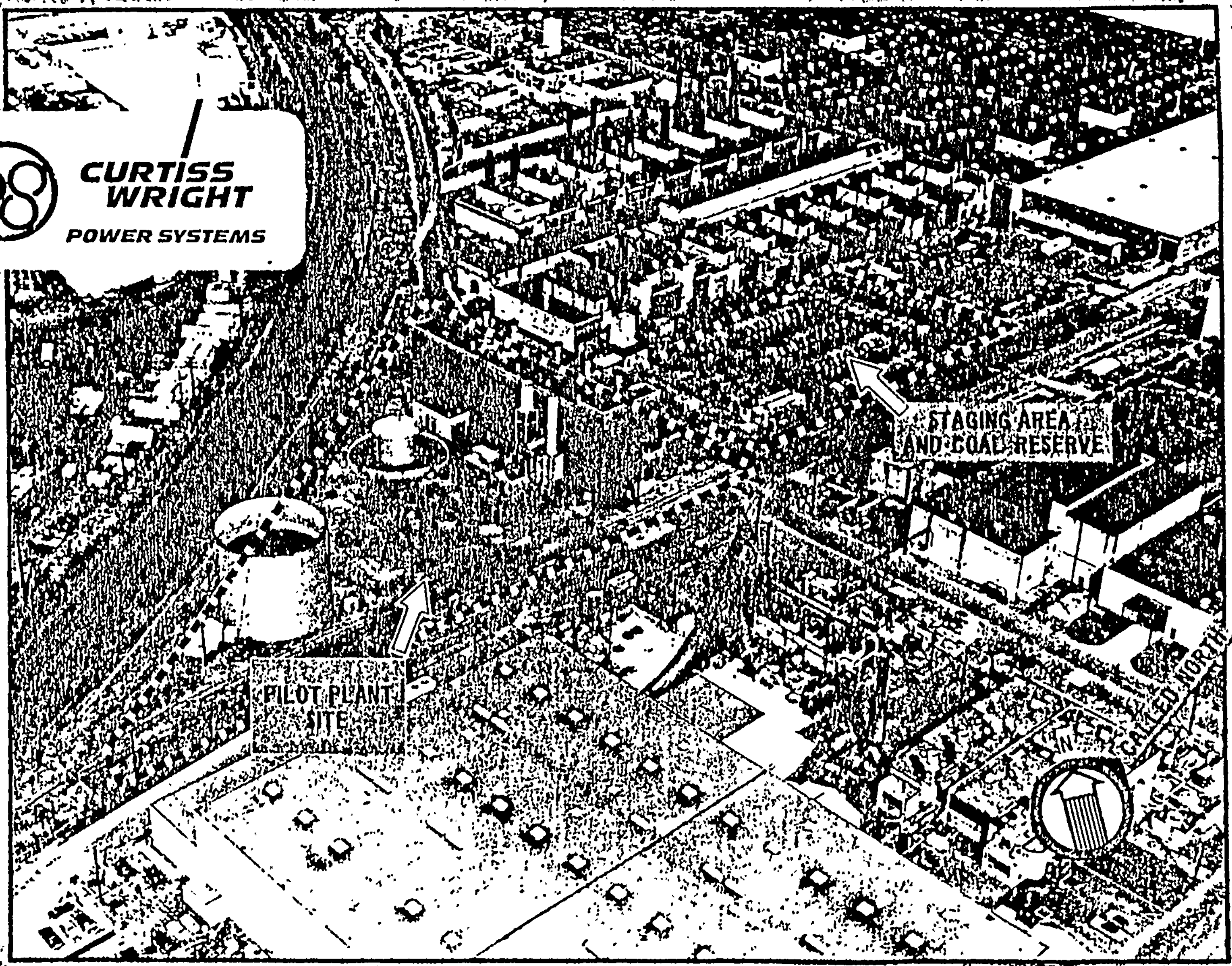

PFB-I-534A-S

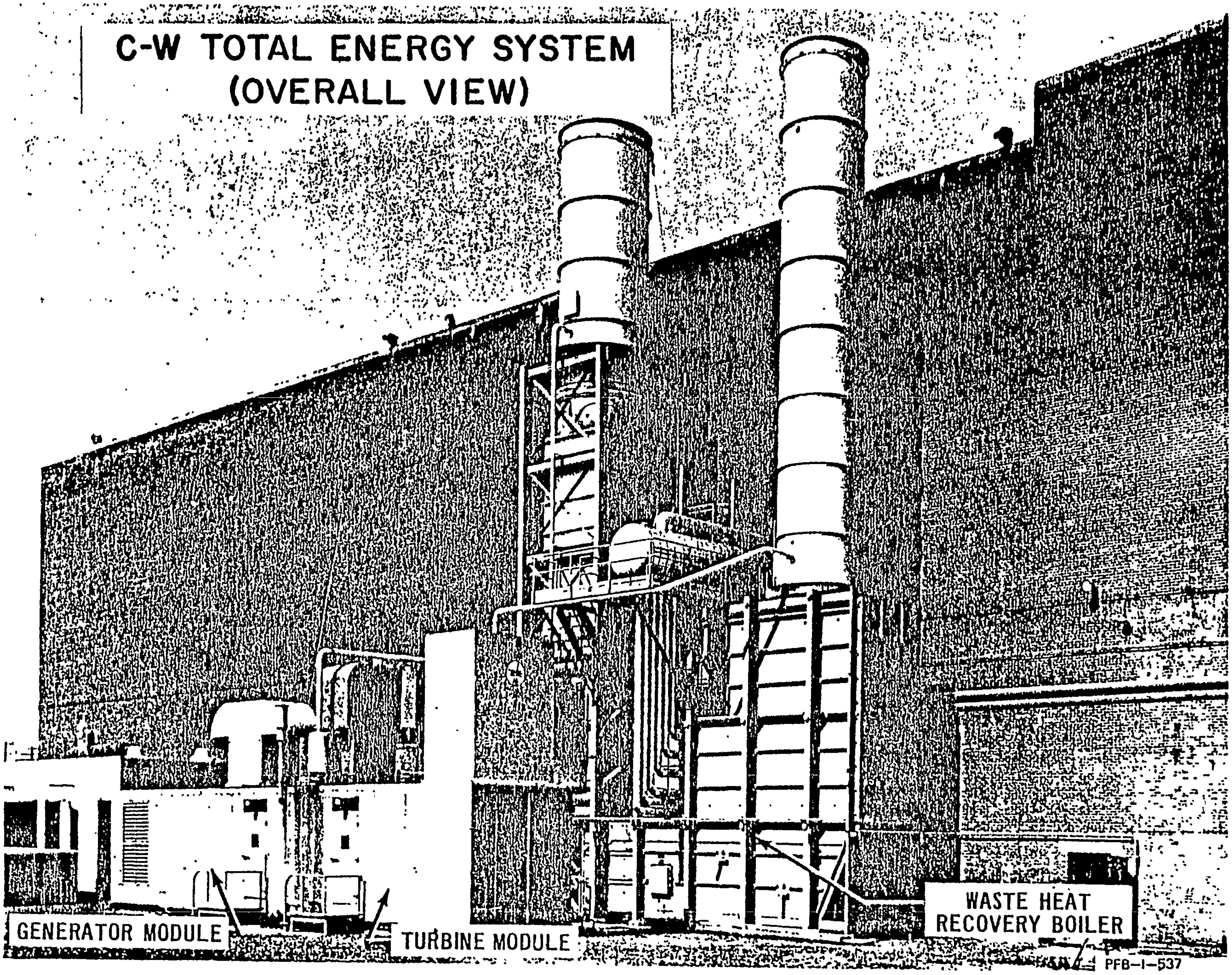

## C-W TOTAL ENERGY SYSTEM (OVERALL VIEW)

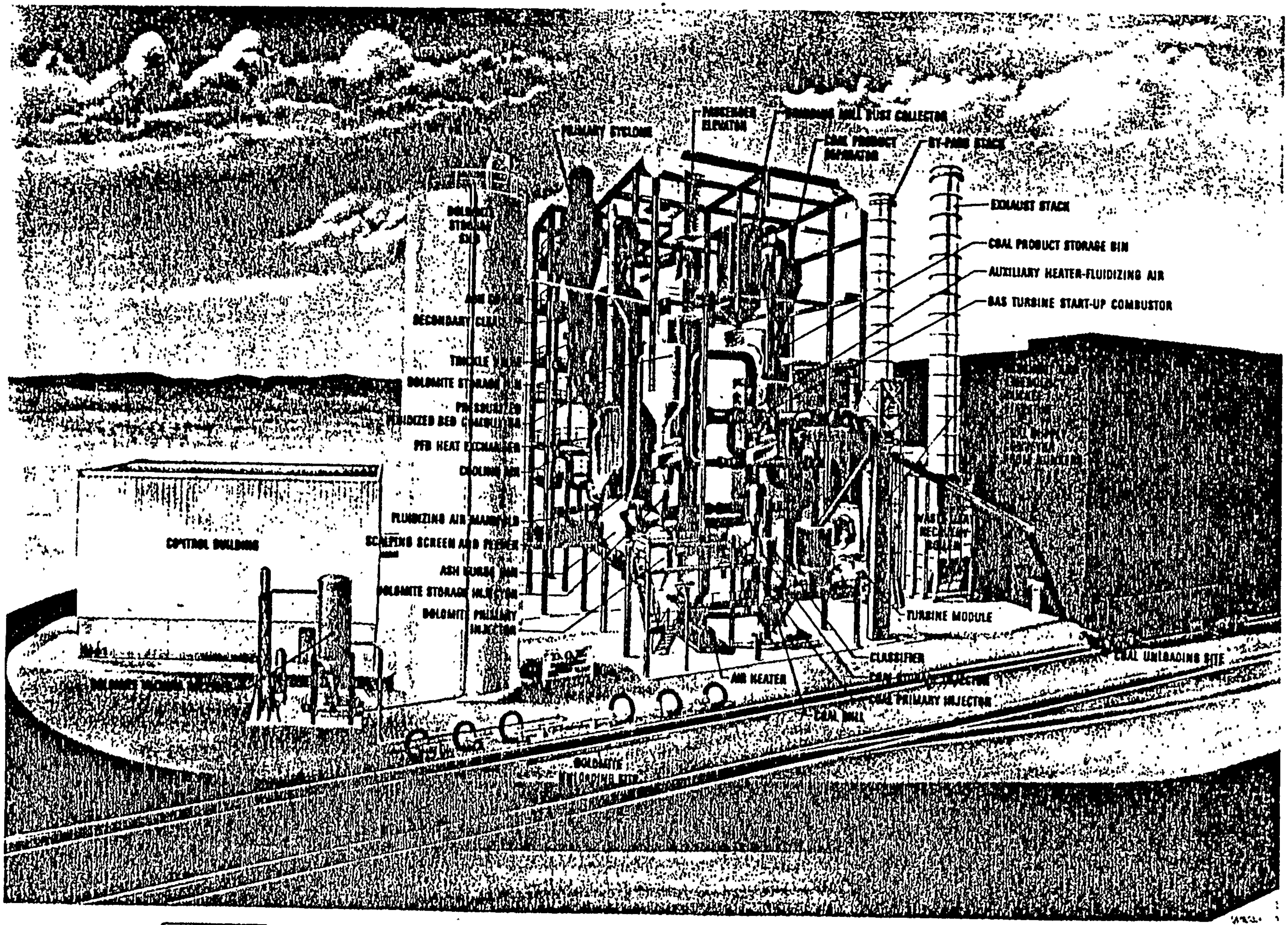

PFB PILOT PLANT · Wood-Ridge Site

PFB-II-274-S

PFB AND CONTROL BUILDING STEEL STRUCTURE - LOOKING WEST

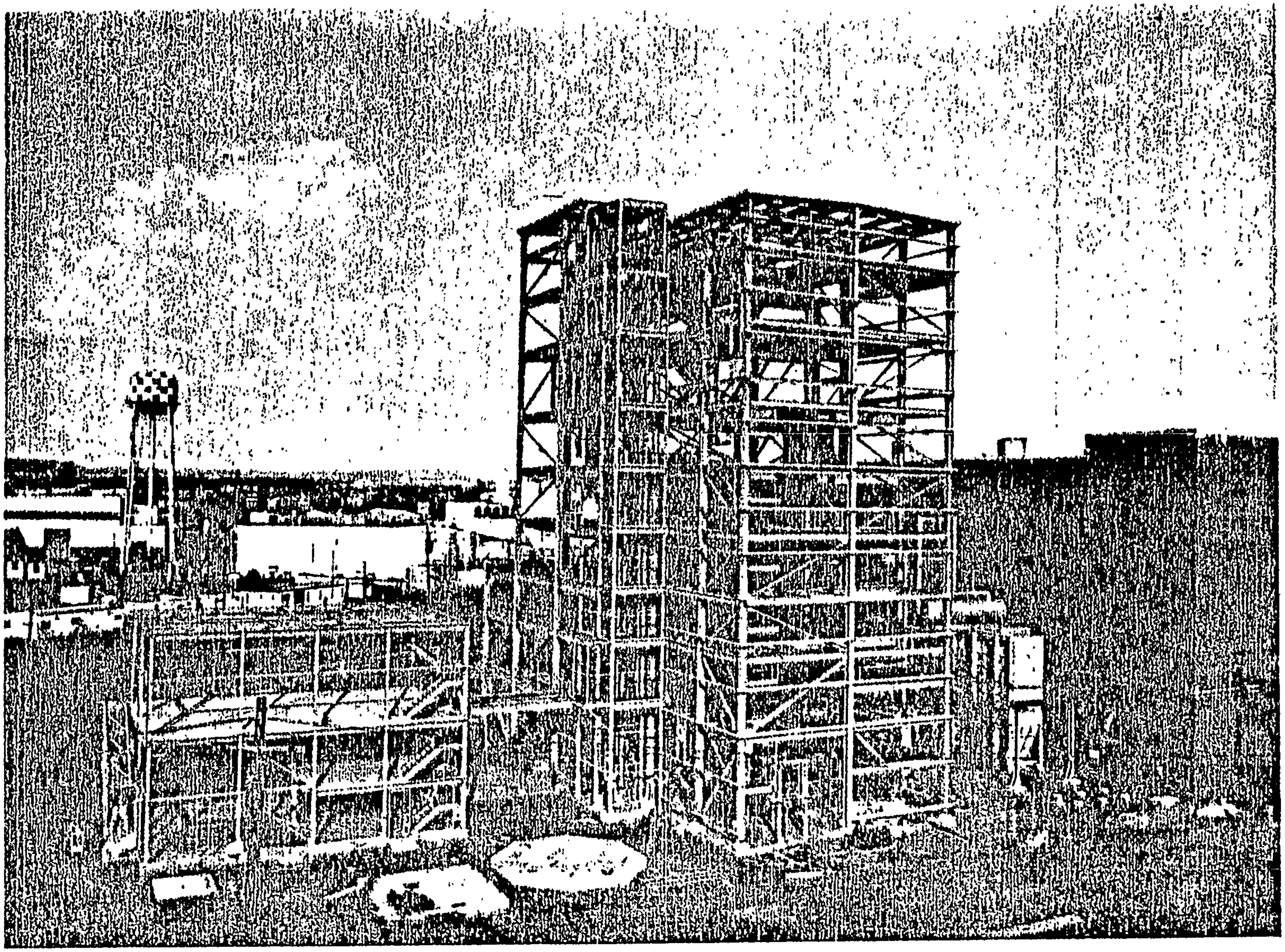

PFB-III-821

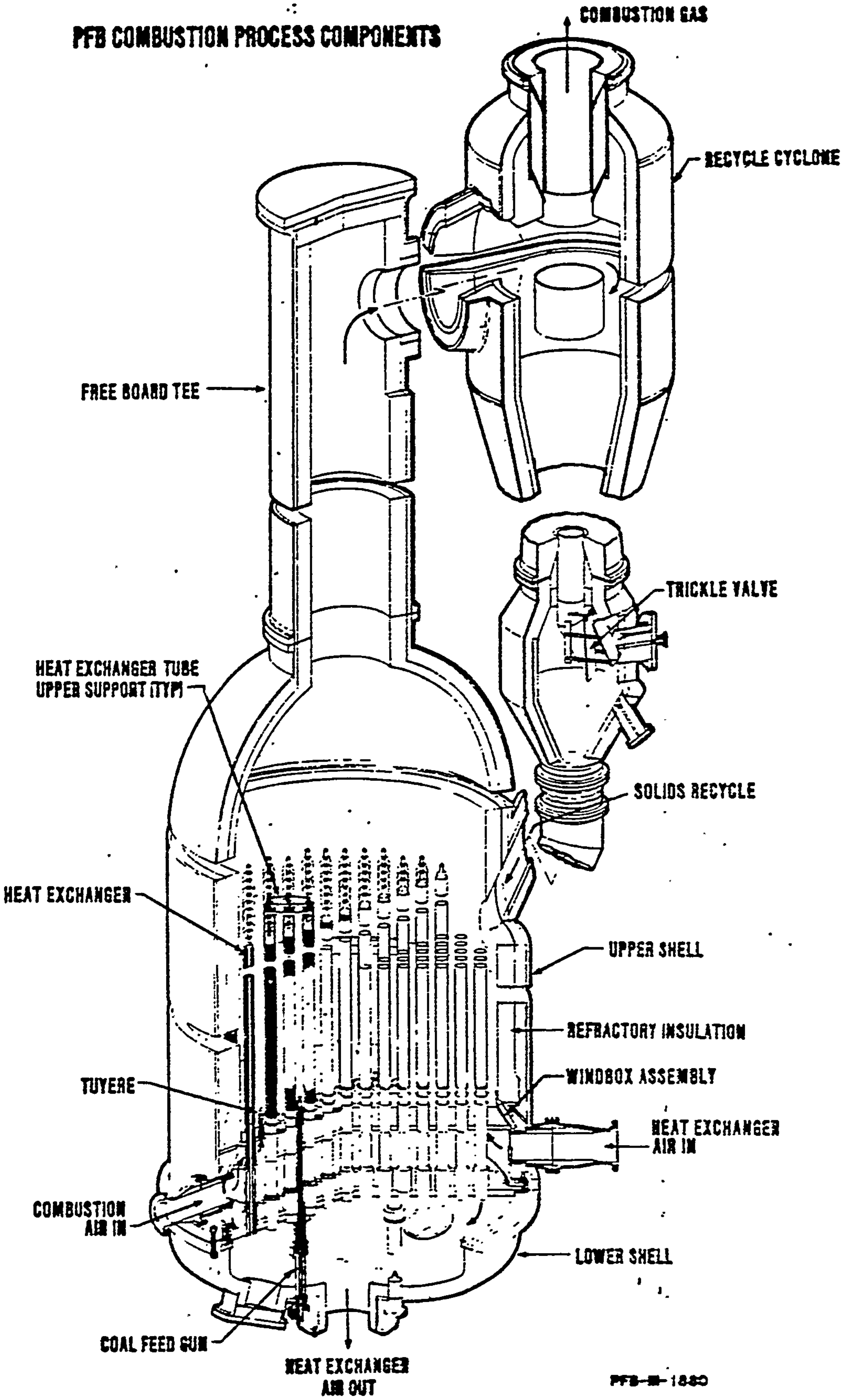
PFB COMBUSTION PROCESS COMPONENTS
COMBUSTION GAS
RECYCLE CYCLONE
FREE BOARD TEE
TRICKLE VALVE
HEAT EXCHANGER TUBE UPPER SUPPORT (TYP)
SOLIDS RECYCLE
HEAT EXCHANGER
UPPER SHELL
REFRACTORY INSULATION
WINDBOX ASSEMBLY
TUYERE
HEAT EXCHANGER AIR IN
COMBUSTION AIR IN
LOWER SHELL
COAL FEED GUN
HEAT EXCHANGER AIR OUT
PFB-III-1880

Figure 2.34

# PFB COMBUSTOR VESSEL AND LOWER HEAD

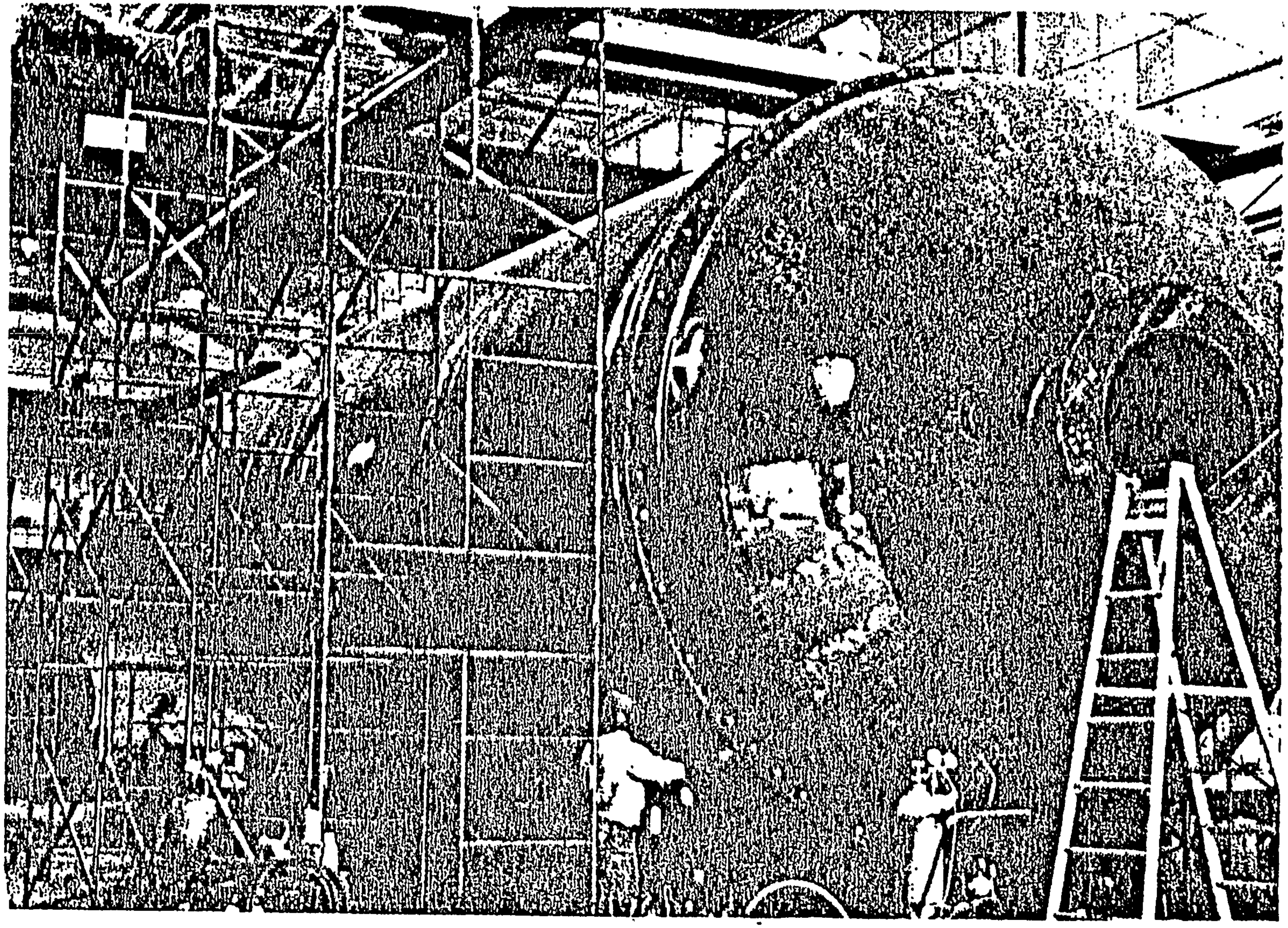

CIRCUMFERENTIAL SEAM WELDING

PFB-III-567A

PFB PILOT PLANT COMBUSTOR

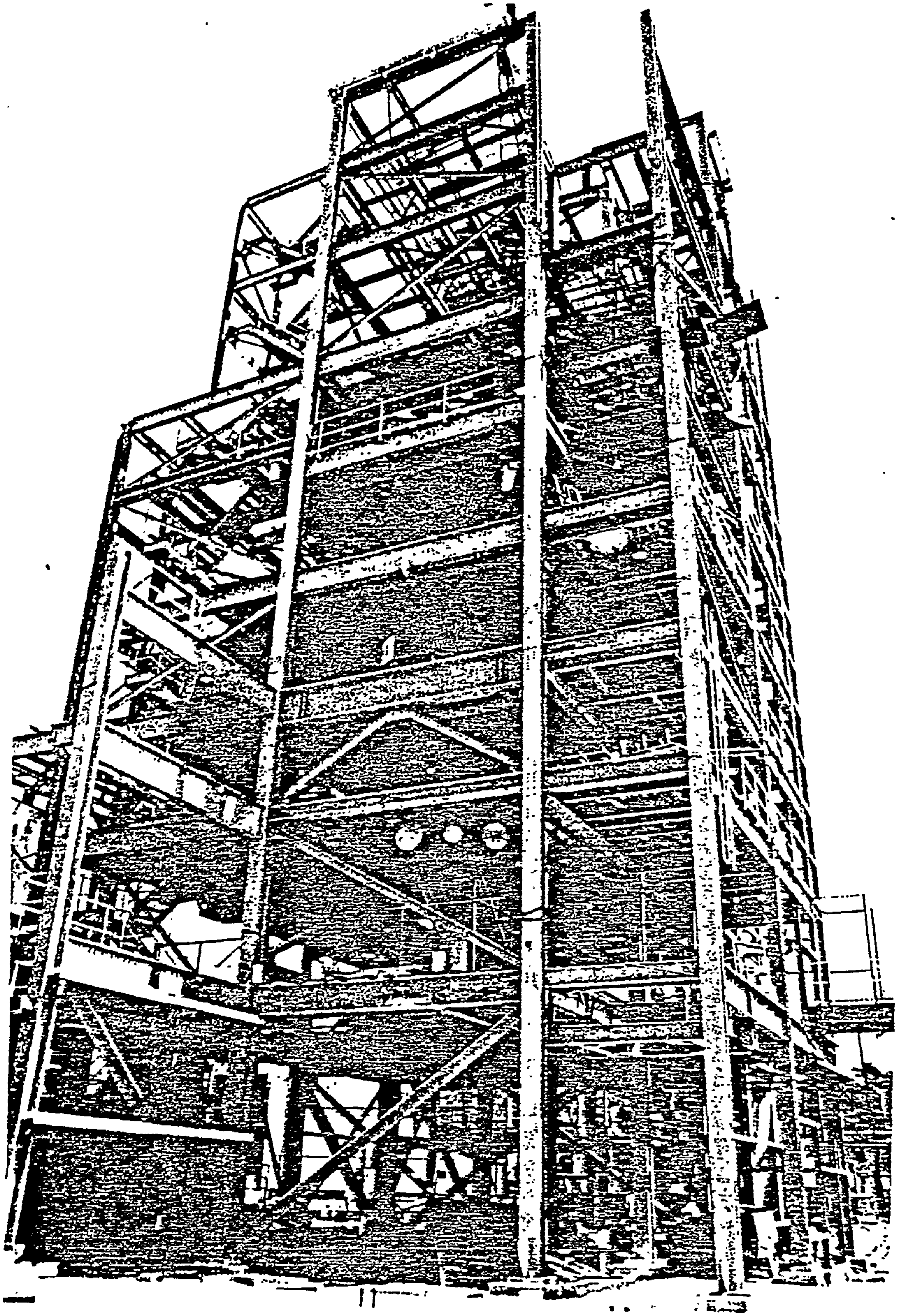

PFB-III-822

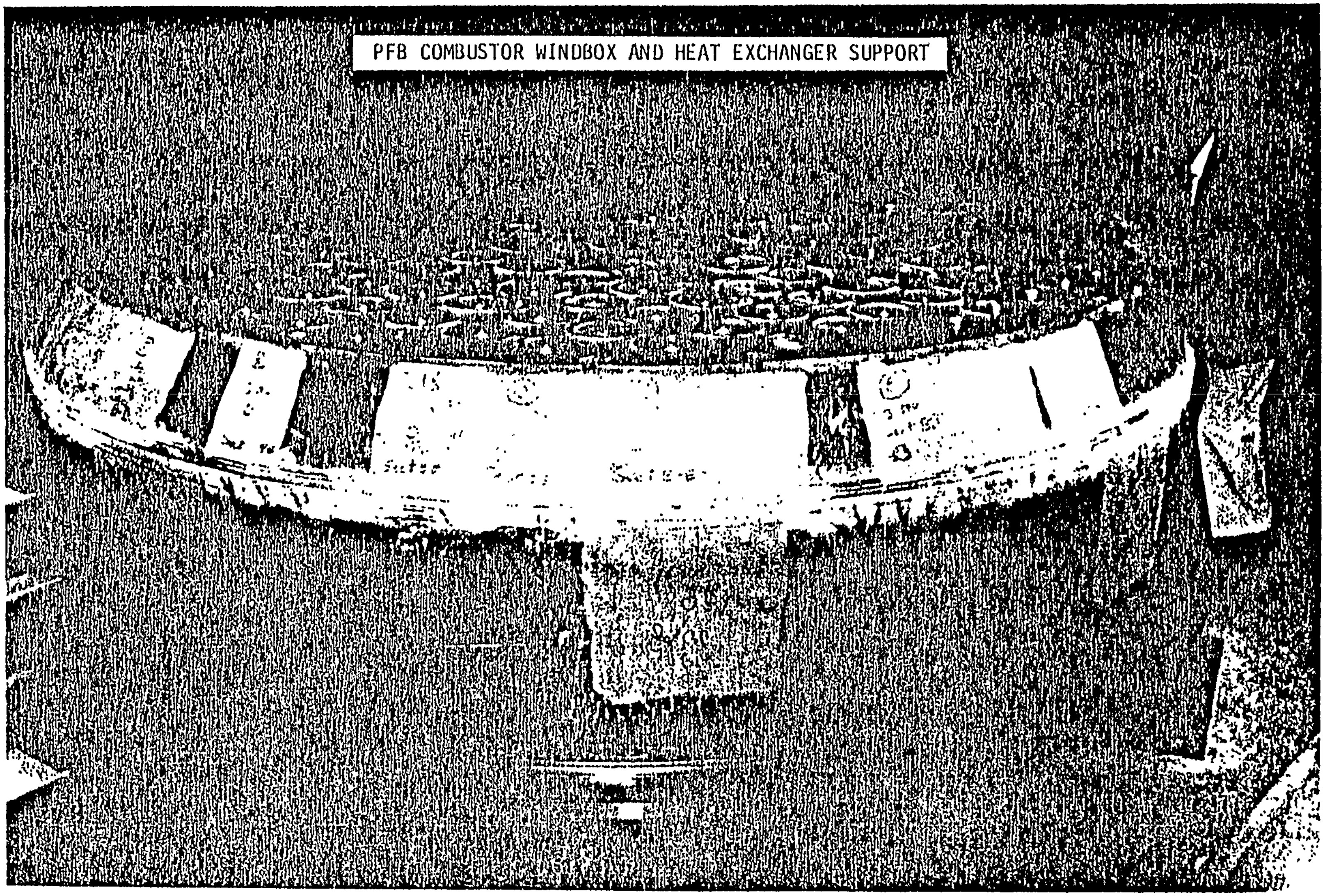

PFB COMBUSTOR WINDBOX AND HEAT EXCHANGER SUPPORT

PFB-III-823

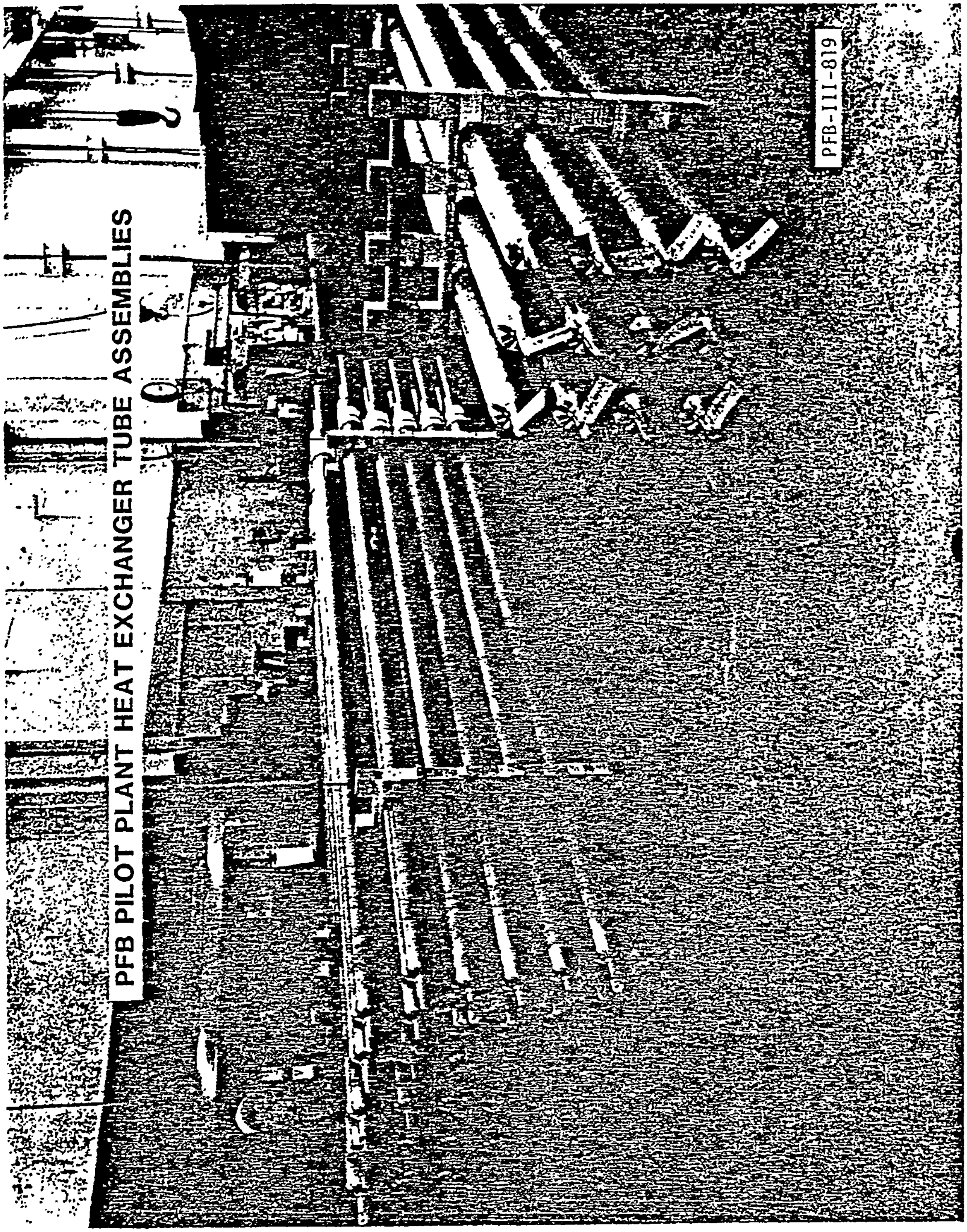

PFB PILOT PLANT HEAT EXCHANGER TUBE ASSEMBLIES

PFB-III-819

PFB PILOT PLANT COMBUSTOR AIR EXCHANGE HOUSING

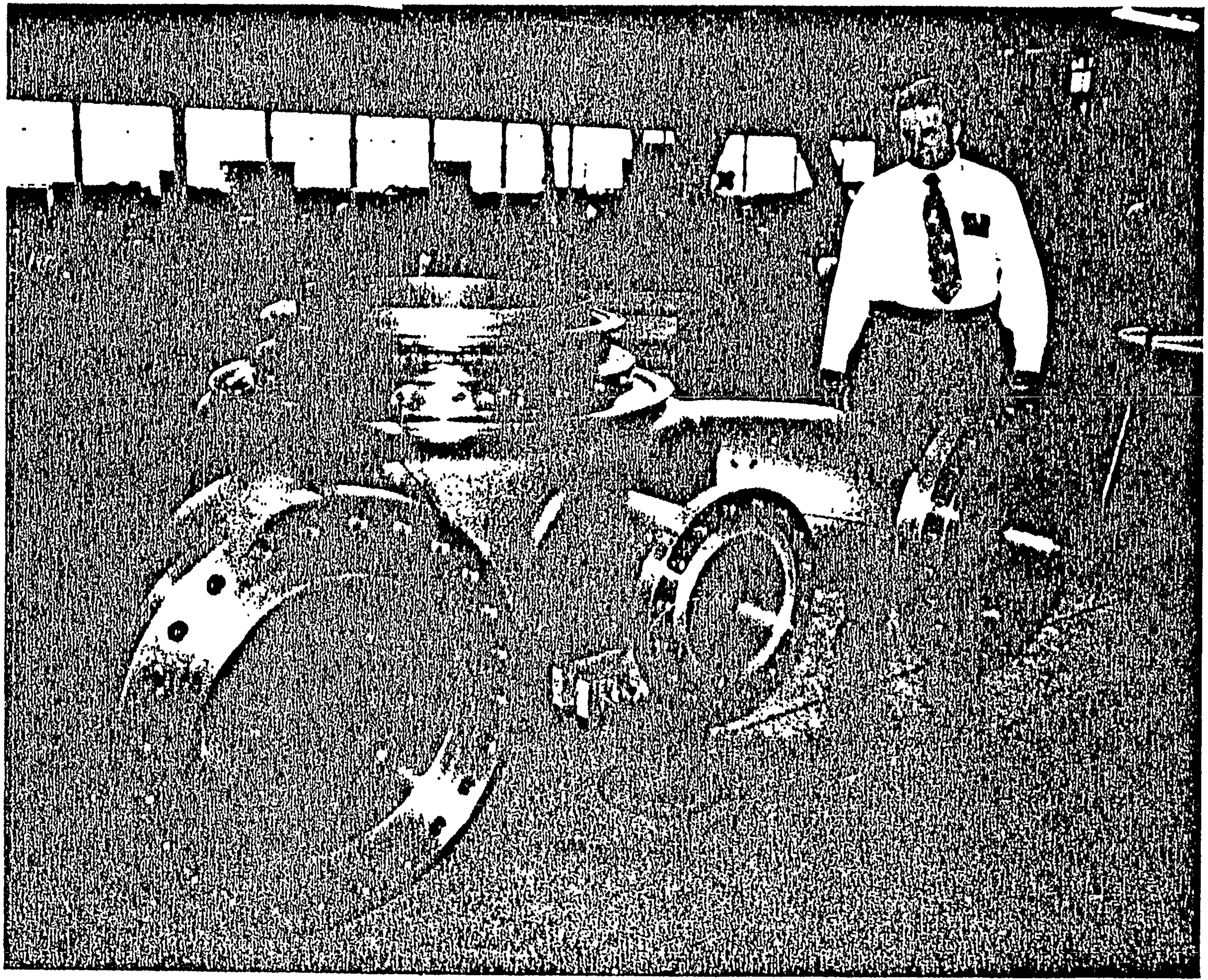

PFB-III-826

## PRESSURIZED FLUIDIZED BED PILOT PLANT

## R&D OBJECTIVES

- LONG TERM MATERIAL CONFIRMATION
    - TURBINE BLADING
    - IN-BED HEAT EXCHANGER
- MULTI-STAGE TURBINE EROSION/CORROSION/DEPOSITION
- MULTIPLE COAL FEED - EFFECT ON COMBUSTION EFFICIENCY, EMISSIONS, GAS CONDITION AND BED TEMPERATURE UNIFORMITY
- SCALE-UP EFFECT ON HOT GAS CLEAN-UP PERFORMANCE
- INTEGRATED CONTROL SYSTEM
    - PFB/GAS TURBINE/WASTE HEAT BOILER

PFB-III-774

# ALTERNATIVE CONCEPTS FOR AIR COOLED PFB

# FLOW DIAGRAM OF COMPRESSED AIR ENERGY STORAGE (CAES)
## WITH COAL FIRED PFB

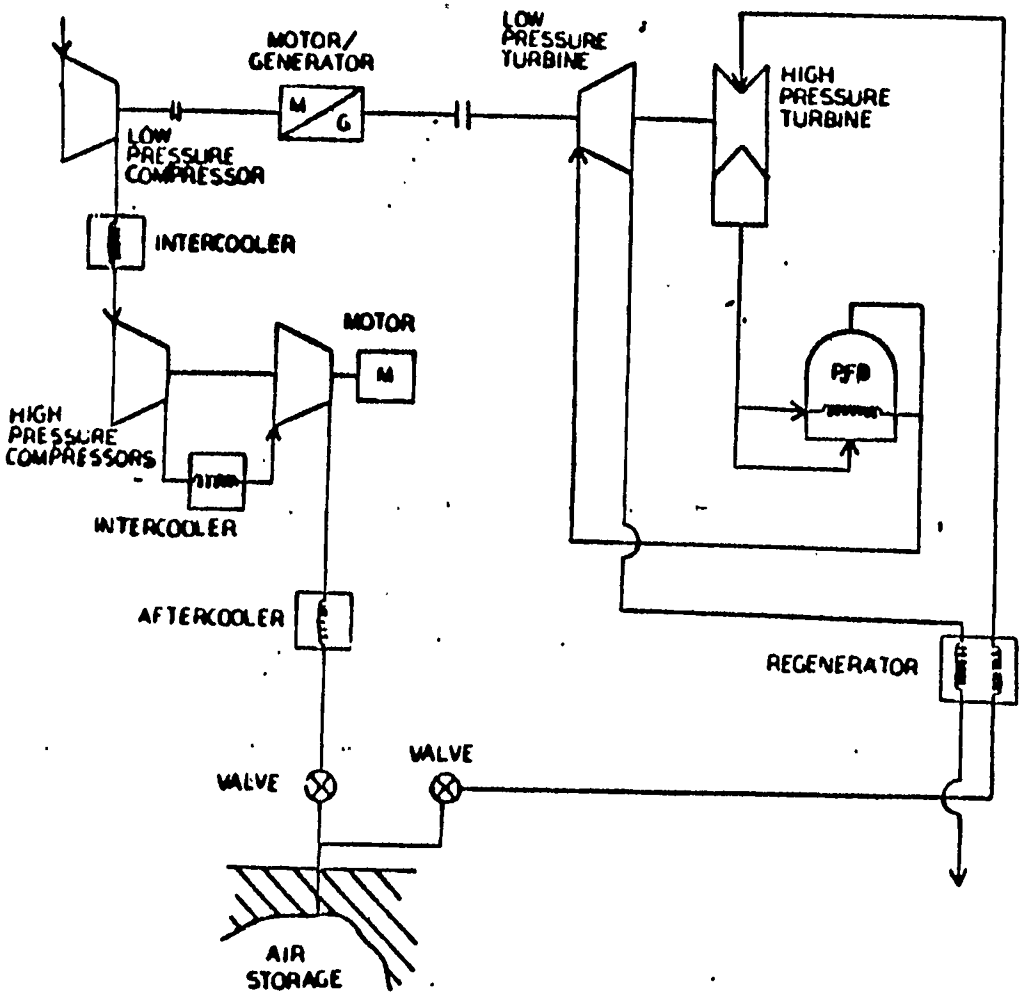

CURTISS WRIGHT CORP.

# PFB AIR HEATER DESIGN WITH SUPPLEMENTARY FIRING

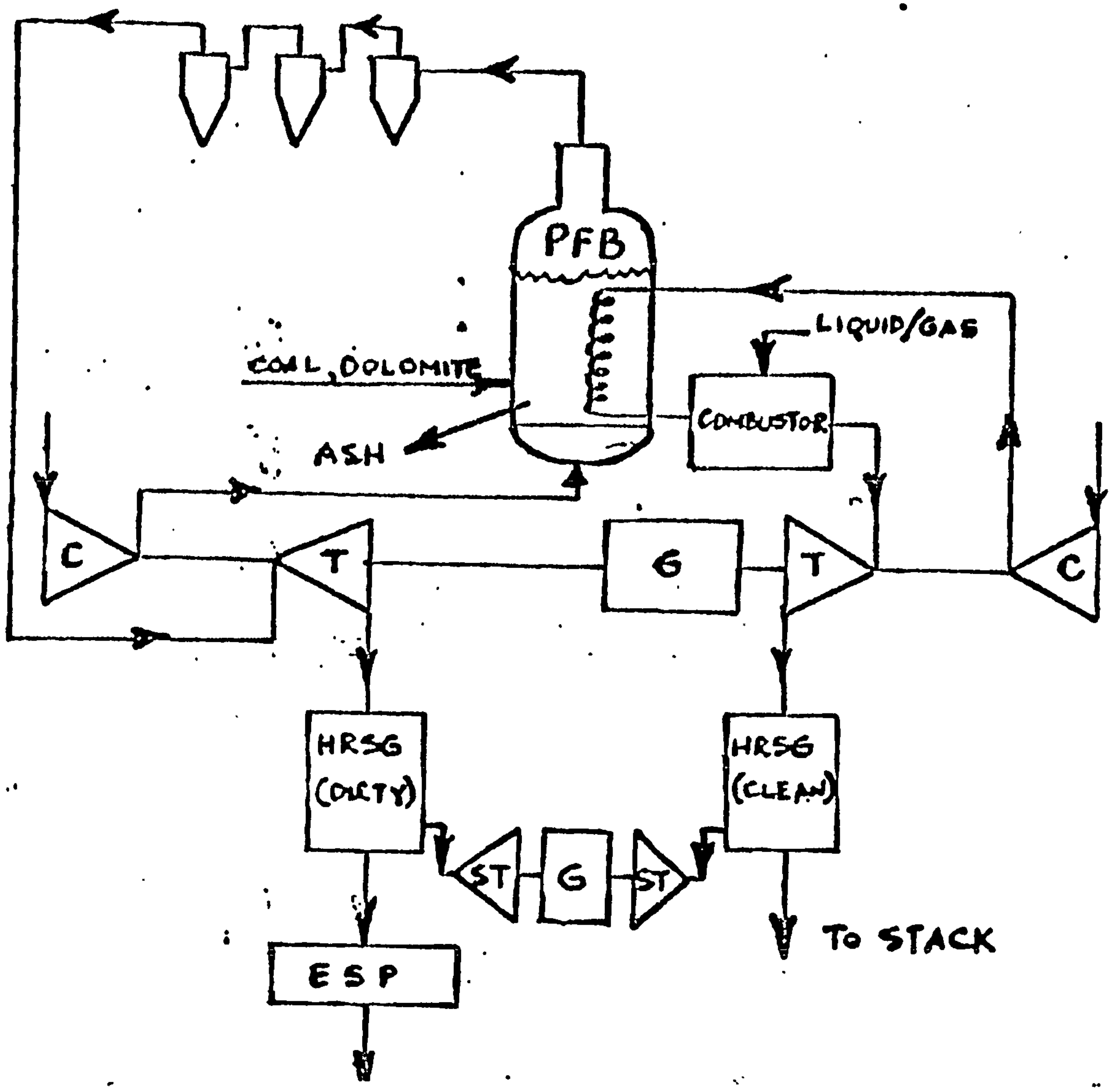

CURTISS WRIGHT CORP.

## SUPPLEMENTARY FIRED AIR CYCLE PFB

| | C-W Commercial PFB Plant | Supplementary Firing | | |
|---|---|---|---|---|
| | | Current Turbine Cooling | HTTT | Combined Cycle Repowering |
| Turbine Inlet °F | 1594 (mixed) | | | |
| Clean Turbine | | 2200 | 2750 | 2066 |
| Dirty Turbine | | 1450 | 1650 | 1450 |
| Mw/Module | 85.1 | 213.9 | 236.7 | 181 |
| Airflow/Module lb/sec | 696 | 1074 | 1023 | 1061 |
| Thermal $\eta$ (HHV) | 39.1 | 44.3 | 48.0 | 39.5 |
| Heat Rate (HHV) | 8728 | 7703 | 7110 | 8640 |
| MM BTU Fuel/Hr | | | | |
| Coal | 743 | 1147 | 724 | 984 |
| Oil | - | 495 | 957 | 530 |
| *Fuel Cost Mills/KwHr | 17.81 | 20.51 | 22.94 | 23.18 |
| Bed Dia/Bed Height Ft | 30.75/16 | 38.2/16 | 28/24 | 34.4/18.5 |

*Coal @ $2.04/MM Btu; Oil @ $4.13/MM Btu

9/15/82

## APPENDIX AB-9-3

# PRESSURIZED FLUIDIZED COAL COMBUSTION PROGRAM AT NEW YORK UNIVERSITY

Presented At
Coal Combustion and Applications Working Group
December 9, 1982
Livingston, New Jersey
by
DR. VICTOR ZAKKAY

THE WORK REPORTED HEREIN WAS SUPPORTED BY THE DEPARTMENT OF ENERGY UNDER CONTRACT NO. DE-AS21-80MC-14322

NEW YORK UNIVERSITY
FACULTY OF ARTS AND SCIENCE
**DEPARTMENT OF APPLIED SCIENCE**

# ADVANTAGES OF P. F. B. C.

1) SUPERIOR ENVIRONMENTAL PERFORMANCE - REMOVE $SO_2$ AS A DRY SOLID

2) ELIMINATING THE NECESSITY FOR ADD-ON SULFUR REMOVAL UNITS

3) REDUCED EMISSIONS OF OXIDES OF NITROGEN ($NO_x$) - LOWER OPERATING TEMPERATURES

4) SUBSTANTIAL IMPROVEMENT IN THE HEAT TRANSFER FILM COEFFICIENT (AS MUCH AS 20 TIMES THAT OF EXISTING COAL COMBUSTIONS)

5) INCREASED SYSTEM EFFICIENCIES BY INCORPORATING A GAS TURBINE TO RECOVER ENERGY FROM THE PRESSURIZED PRODUCTS OF COMBUSTION

   A) WATER/STEAM - COOLED TUBES IN BED
   B) AIR-COOLED TUBES IN BED
   C) NO IN-BED TUBES, WITH ALL HEAT REMOVAL BY AIR BLOWER THROUGH THE BED

6) WIDE RANGE OF FUELS POSSIBLE, COAL OF ALL RANKS

# M A J O R P. F. B. C. F A C I L I T I E S

## POWER GENERATING UNITS

| | CURTISS-WRIGHT CORPORATION | AEP STAL LAVAL | GRIMETHORPE |
|---|---|---|---|
| BED CROSS SECTION | 12′ DIA | 3′ x 6.5′ TOP<br>3′ x 3′ BOTTOM | 6′ x 6′ SQUARE |
| BED HEIGHT, FT | 7 | 13 | 16 |
| BED TEMPERATURE, °F | 1650 | 1560 | 1560 |
| BED PRESSURE, ATA | 6.8 | 16 | 10 |
| FLUIDIZATION VELOCITY, FT/S | 2.7 | 3 | 8.2 |
| POWER OUTPUT | 13 $MW_E$ | 15 $MW_{TH}$ | 80 $MW_{TH}$ |

## R & D UNITS

| | NYU | CURTISS-WRIGHT CORPORATION | GENERAL ELECTRIC | LEATHERHEAD |
|---|---|---|---|---|
| BED CROSS SECTION | 3′ DIA | 3′ DIA | 1′ DIA | 1′ DIA |
| BED HEIGHT, FT | 10′ | 16 | 5.2 | 8 |
| BED TEMPERATURE, °F | 1600 | 1650 | 1400-1750 | 1650 |
| BED PRESSURE, ATA | 7-10 | 6.8 | 10 | 20 |
| FLUIDIZATION VELOCITY, FT/S | 4 | 2.7 | 3 | 3 |
| POWER INPUT, $MW_{TH}$ | 3.2 | 2.2 | 0.5 | 1.0 |

# SULFUR RETENTION AND CALCINATION

A) CALCINATION PROCESS IN P. F. B. C.

B) EFFECT OF PRESSURE ON CALCINATION PROCESS, WITH REGARD TO:

  1) LIMESTONE ($\mathrm{Ca\ CO_3}$)

  2) DOLOMITE ($\mathrm{Ca\ CO_3\ Mg\ CO_3}$)

C) EFFECT OF TEMPERATURE

D) EFFECT OF PARTICLE DIAMETER

E) EFFECT OF EXCESS AIR

## COAL ANALYSIS

| | BITUMINOUS COAL | | LIGNITE | |
|---|---|---|---|---|
| ULTIMATE ANALYSIS | DRY BASIS % | WET BASIS % | DRY BASIS % | WET BASIS % |
| Carbon | 75.72 | 73.44 | 63.51 | 41.05 |
| Hydrogen | 5.50 | 5.34 | 3.26 | 6.03 |
| Nitrogen | 1.50 | 1.46 | 3.85 | 0.55 |
| Sulphur | 3.22 | 3.12 | 1.49 | 0.97 |
| Oxygen | 6.29 | 6.10 | 18.60 | 8.00 |
| Chlorine | 0.09 | 0.087 | -- | -- |
| Ash | 7.68 | 7.45 | 12.30 | 8.00 |
| Moisture | -- | 3.00 | --- | 35.40 |
| Heating Value | 13,800 Btu/lb | | 10,417 Btu/lb | |

## SORBENT ANALYSIS

| | DOLOMITE | LIMESTONE |
|---|---|---|
| Calsium Carbonate | 54.60% | 94.04% |
| Magnesium Carbonate | 44.70% | 1.46% |
| Silicon Dioxide | 0.40% | 1.16% |
| Aluminum Oxide | 0.35% | 0.24% |
| Iron Oxide | 0.05% | -- |
| Moisture | -- | 3.00% |

# FUTURE PROGRAMS AT NYU IN PRESSURIZED FLUIDIZED BED COMBUSTION

1) TESTS WITH LIGNITE AND LIGNITE WATER SLURRY

2) TESTS WITH EROSION IN EROSION OF HEAT EXCHANGER TUBES IN SUPPORT OF THE GRIMETHORPE PROJECT

3) ELECTROSTATIC GRANULAR BED TESTS - JOINT PROJECT WITH GENERAL ELECTRIC

4) ADVANCED MODULAR CELLS PFBC CONCEPT

5 GAS TURBINE STUDIES TO PROVIDE ADDITIONAL SUPPORT FOR NYU FACILITY

## TECHNICAL UNCERTAINTIES

1) HOT GAS CLEANUP/TURBINE PERFORMANCE
   A) TURBINE EROSION
   B) TURBINE DEPOSITION
   C) PRESENCE OF ALKALI METALS, AND SULFUR OXIDES
2) MATERIAL PROBLEM FOR RELIABILITY IN BED TUBE EROSION
3) SULFUR RETENTION AT HIGH PRESSURE
4) FEED WITH RUN OF THE MINE COAL

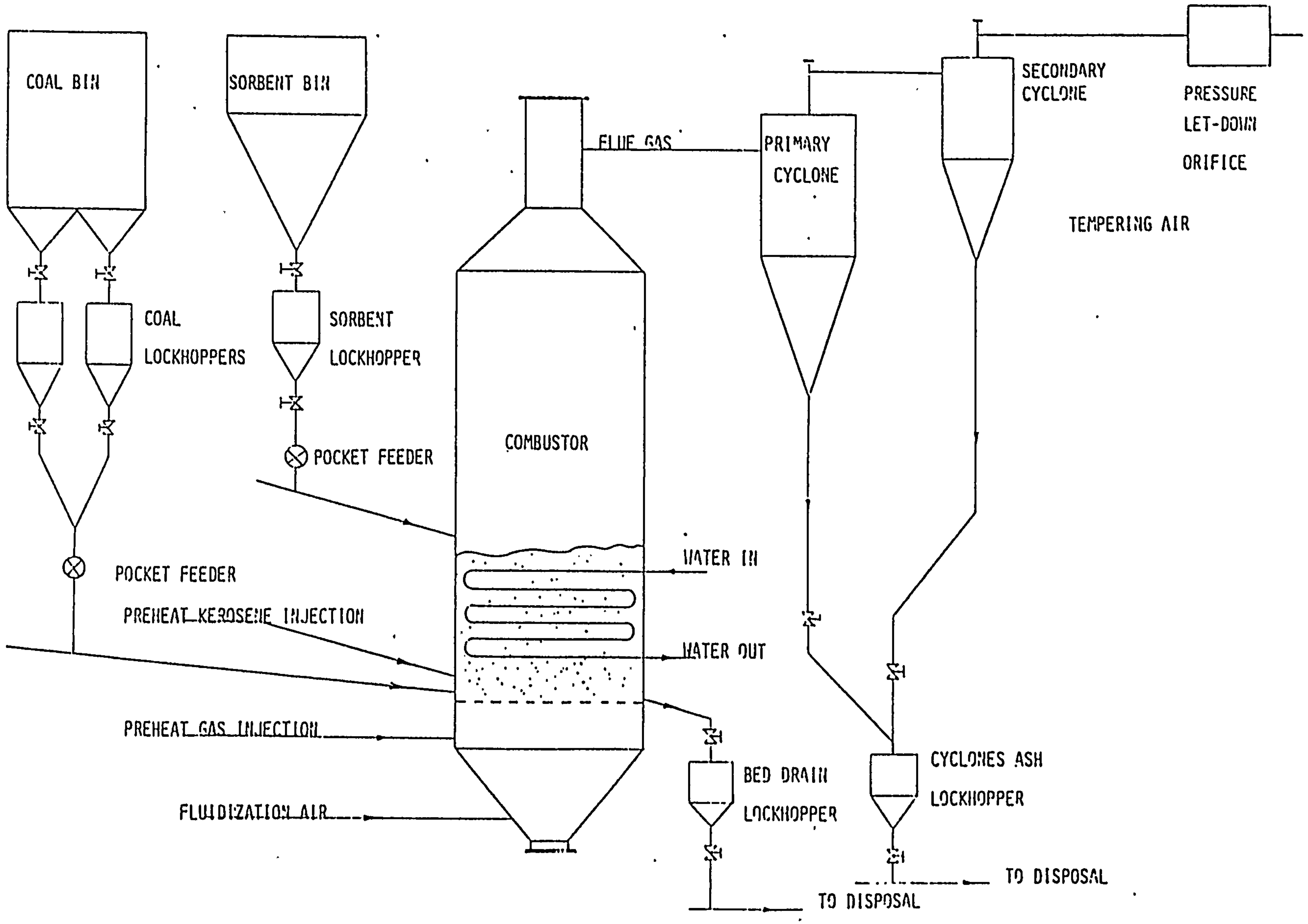

FIGURE III.1 NYU-DOE PRESSURIZED FLUIDIZED BED COMBUSTOR FACILITY

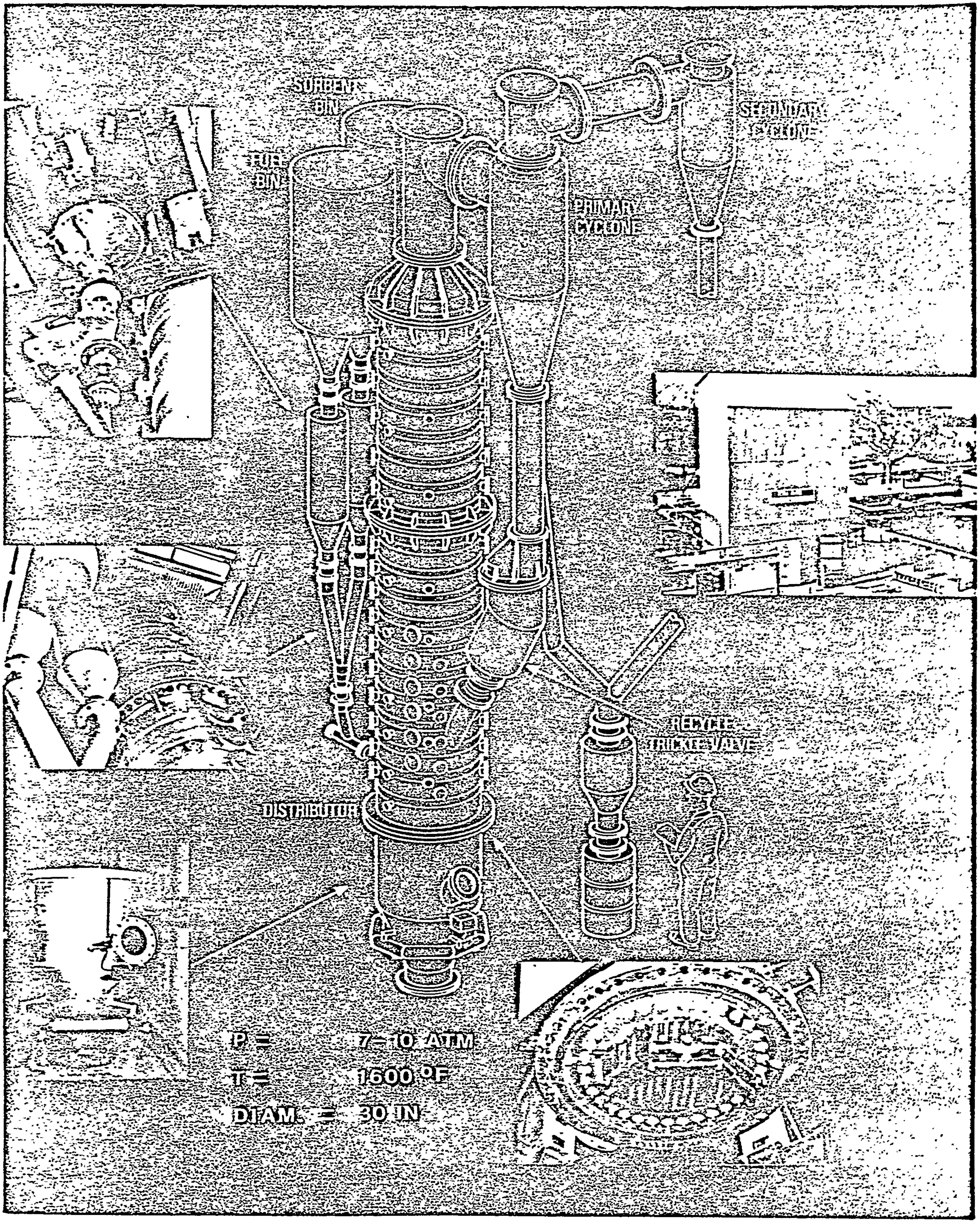
SORBENT BIN
FUEL BIN
SECONDARY CYCLONE
PRIMARY CYCLONE
RECYCLE TRICKLE VALVE
DISTRIBUTOR
P = 7-10 ATM
T = 1600 °F
DIAM. = 30 IN

AB-342

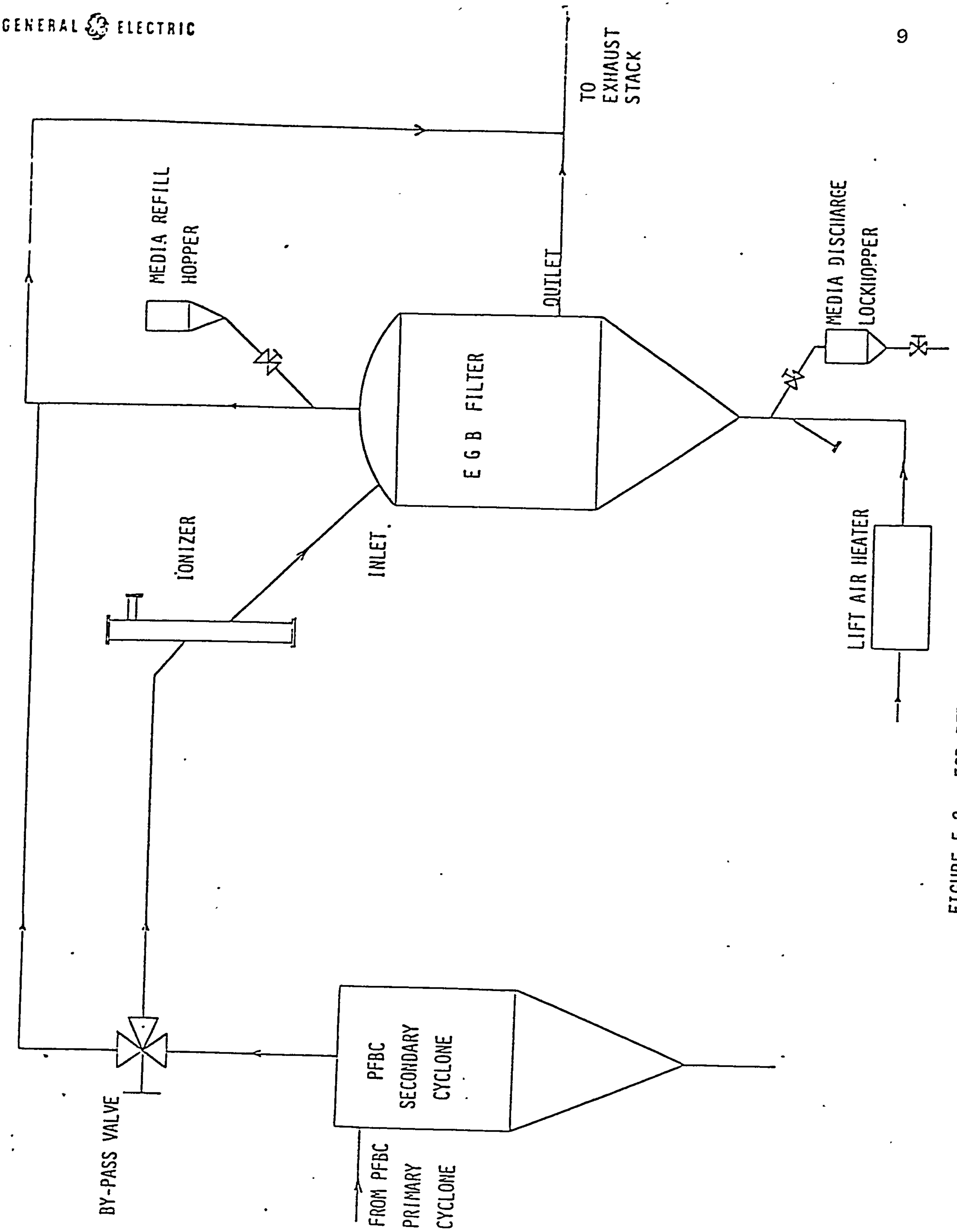

FIGURE 5-2. EGB-PFB FILTER INTEGRATION

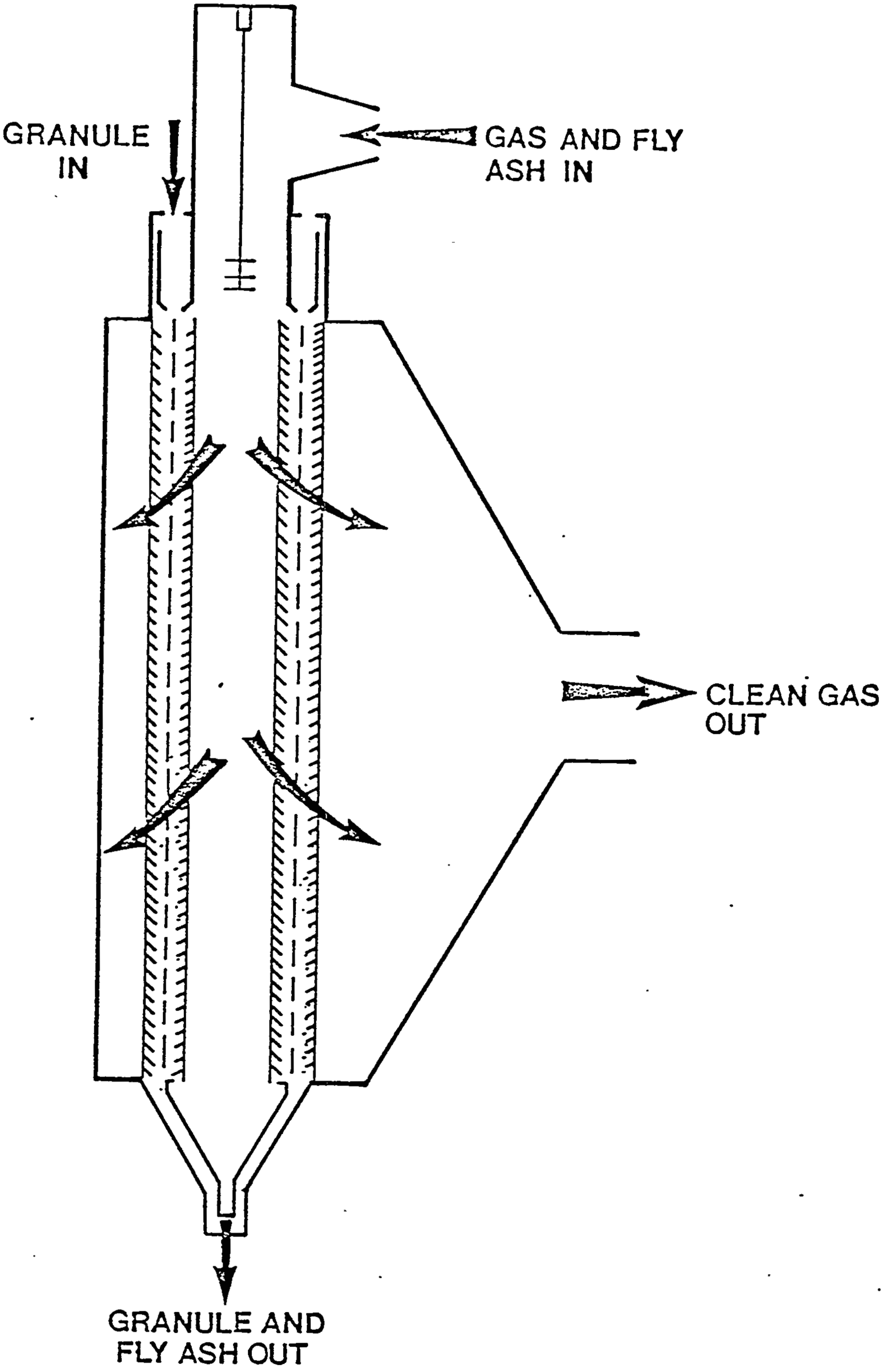

Figure 2-3. Schematic of EGB Filter Element

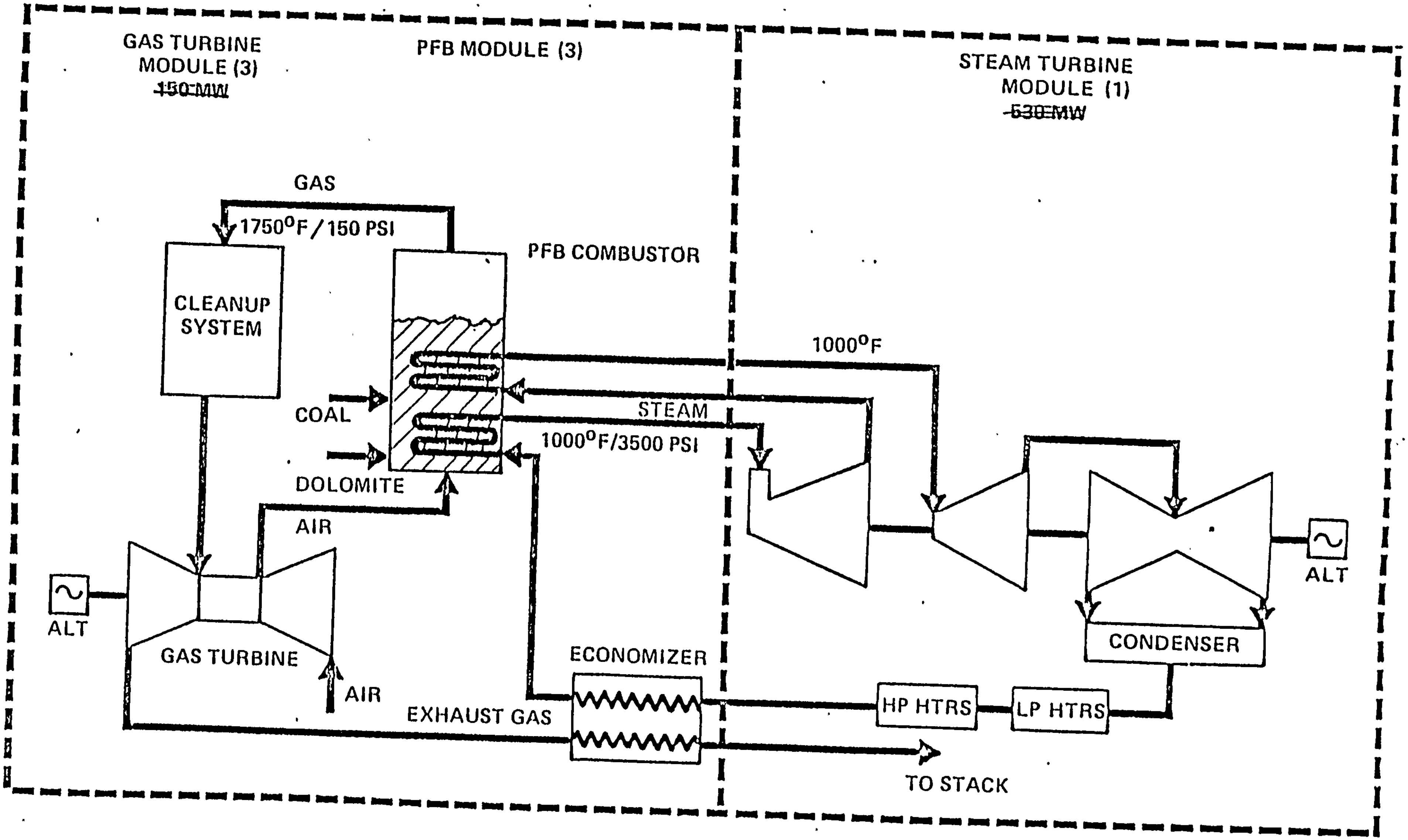

Figure 2-1. Pressurized Fluidized Bed Powerplant Schematic

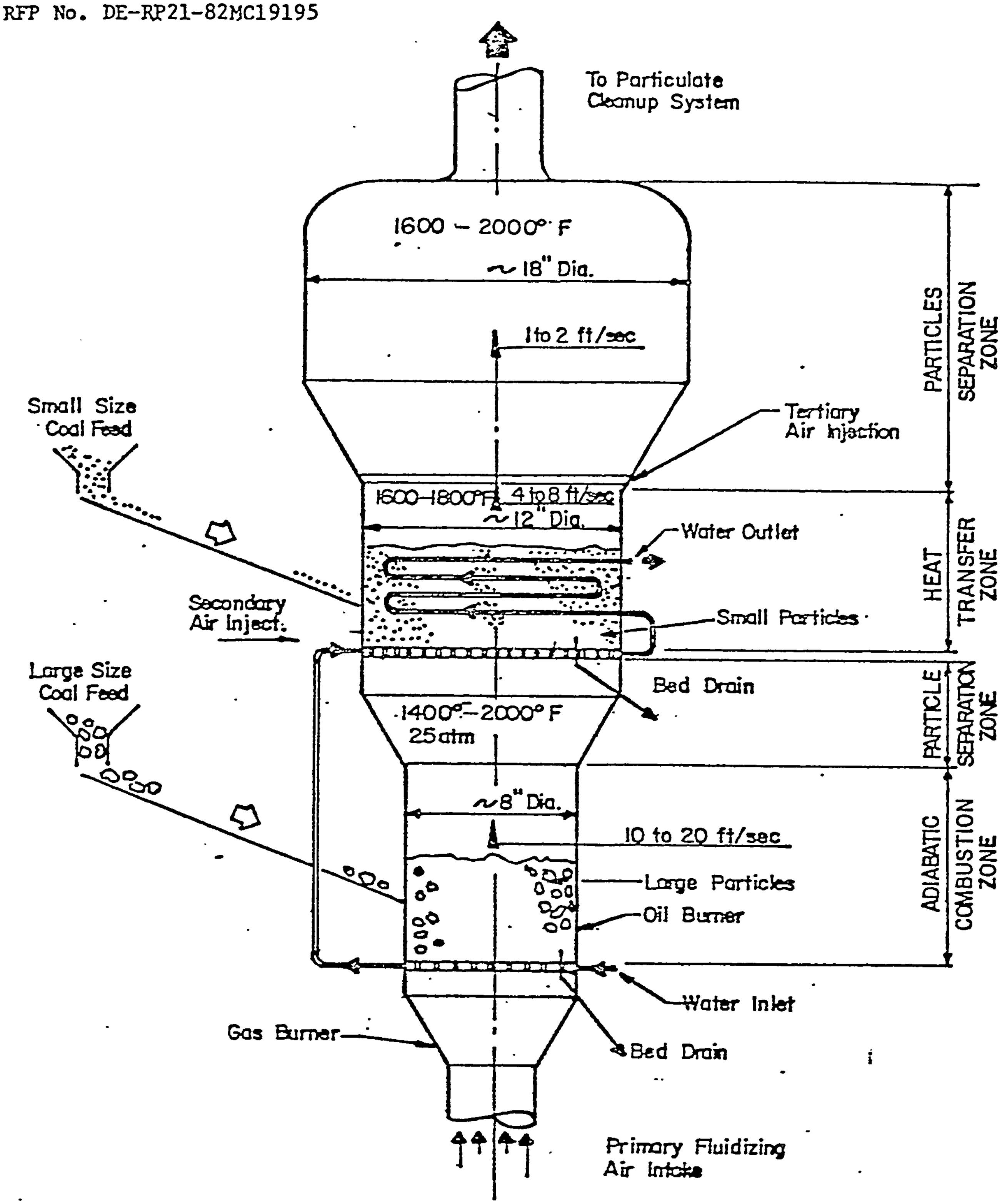

EXHIBIT II-1

NYU's ADVANCED MODULAR-CELL PFBC CONCEPT

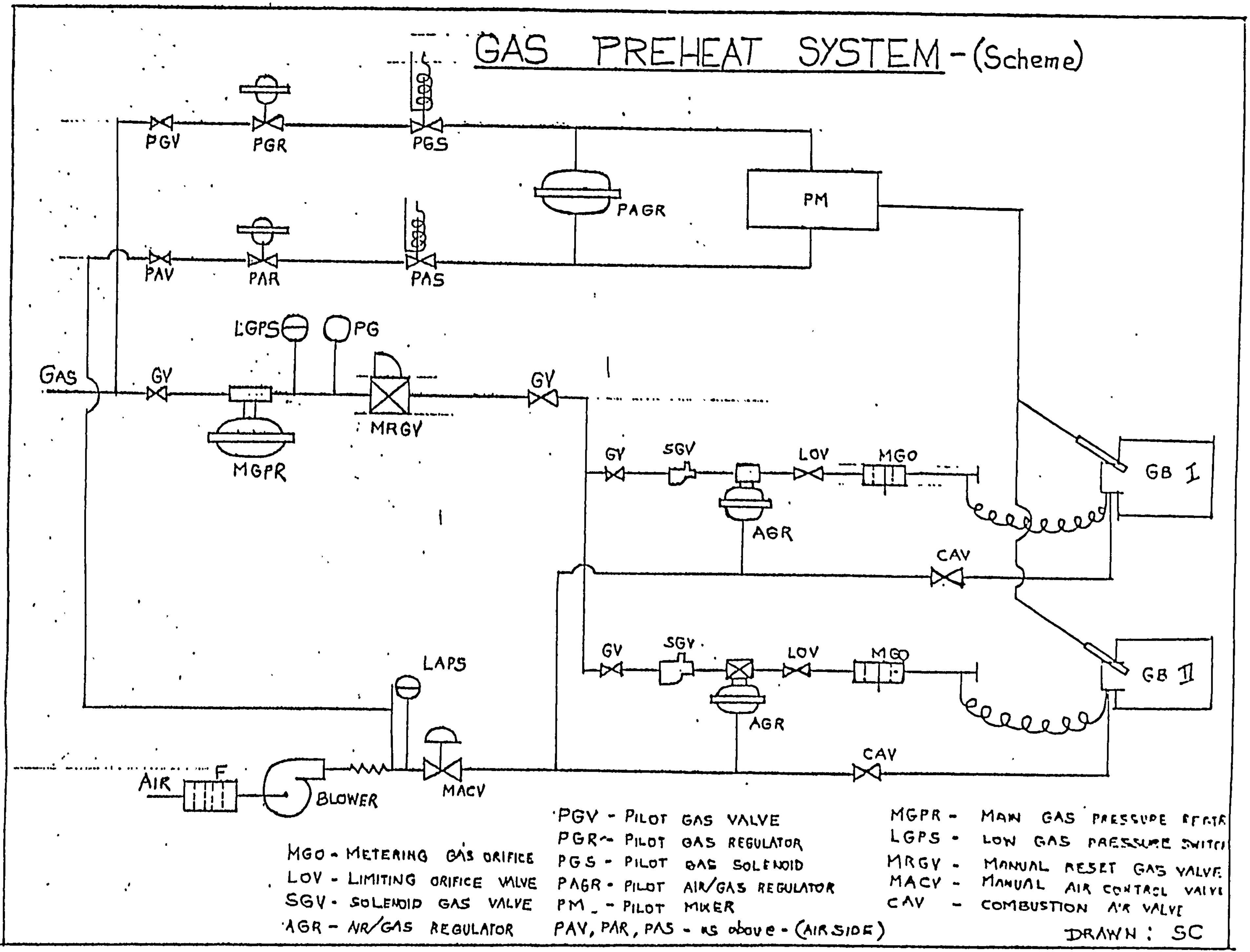

FIGURE III.4 GAS PREHEAT SYSTEM

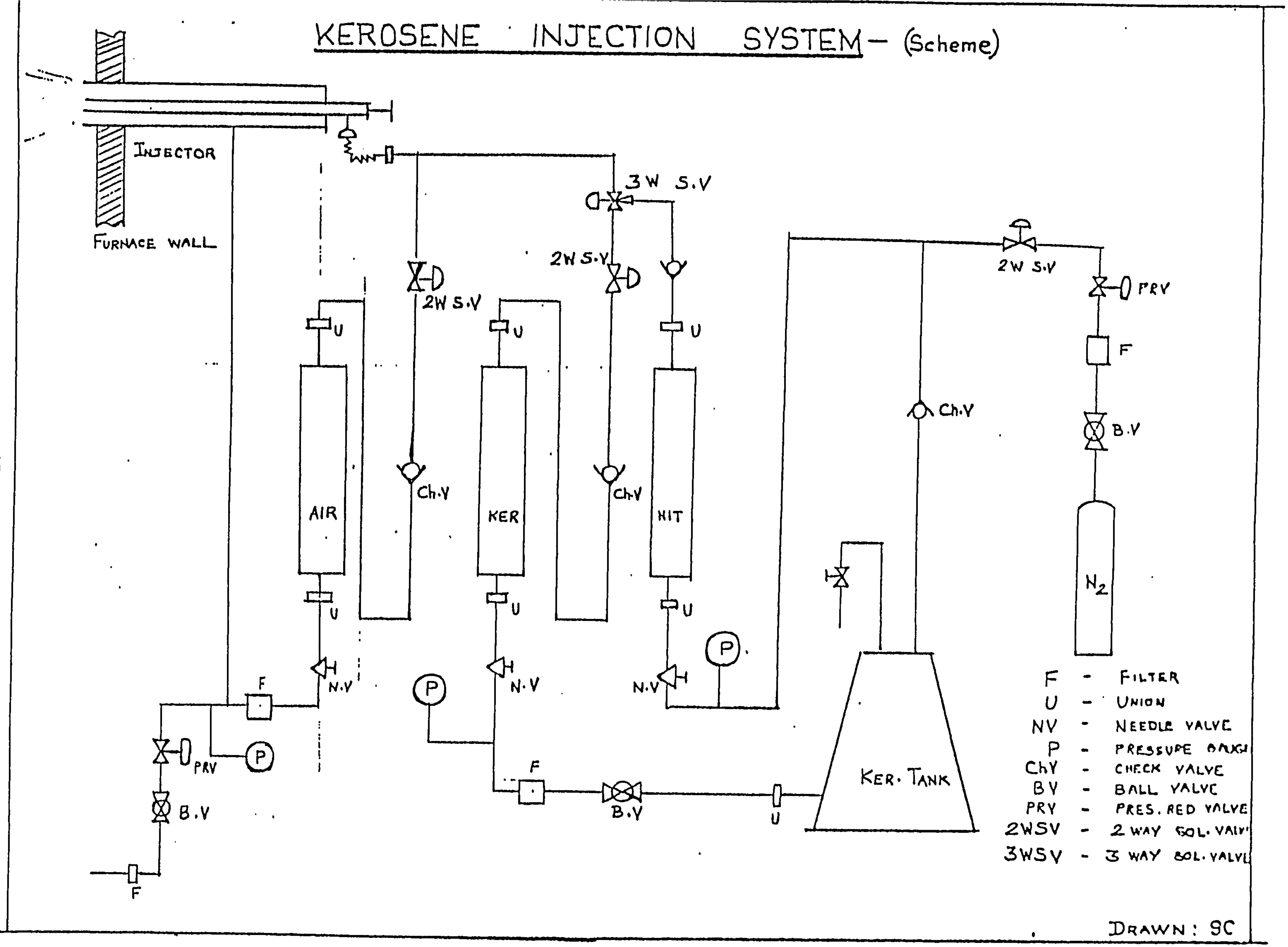

FIGURE III.5 KEROSENE PREHEAT SYSTEM

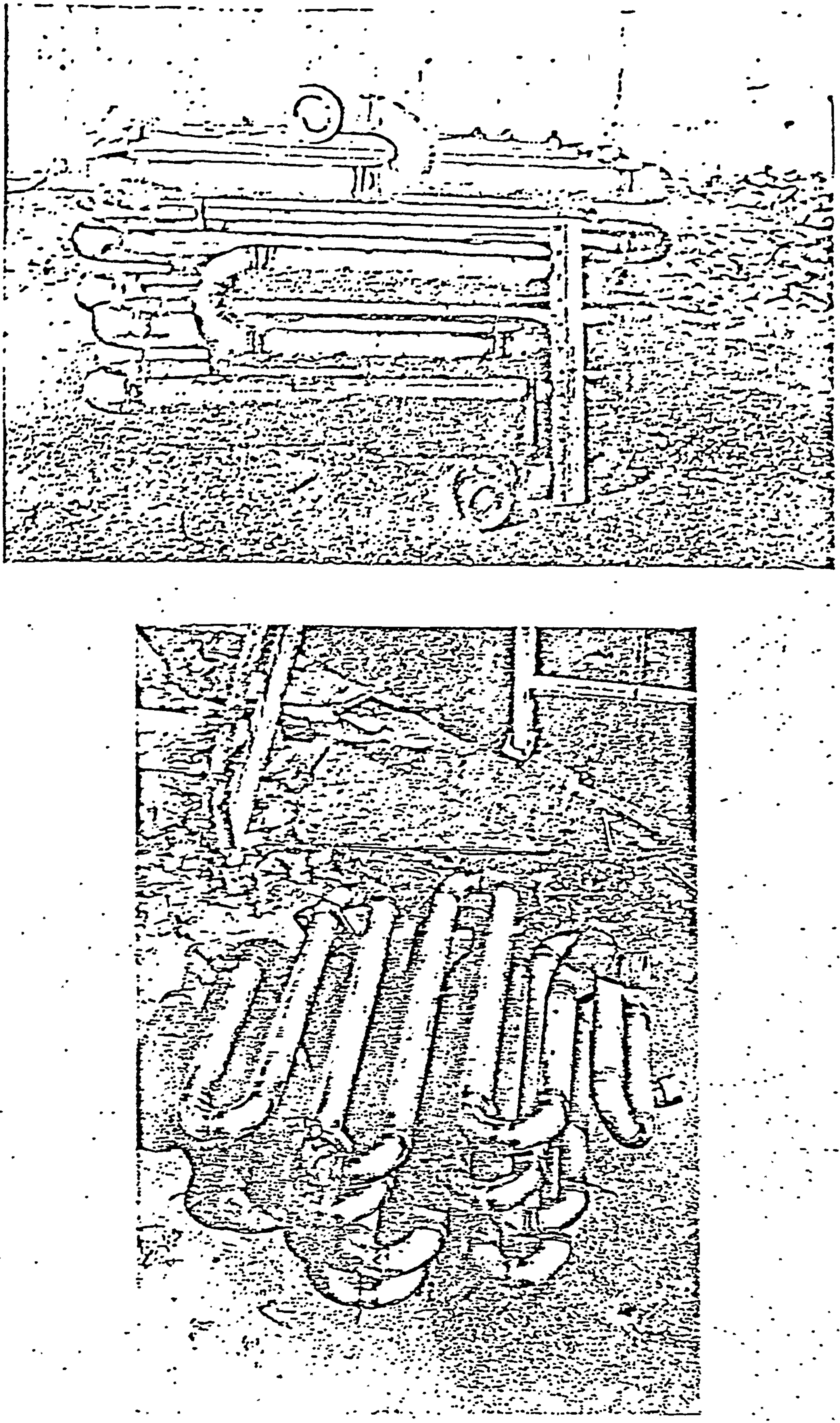

FIGURE III.6 HEAT EXCHANGER BUNDLE

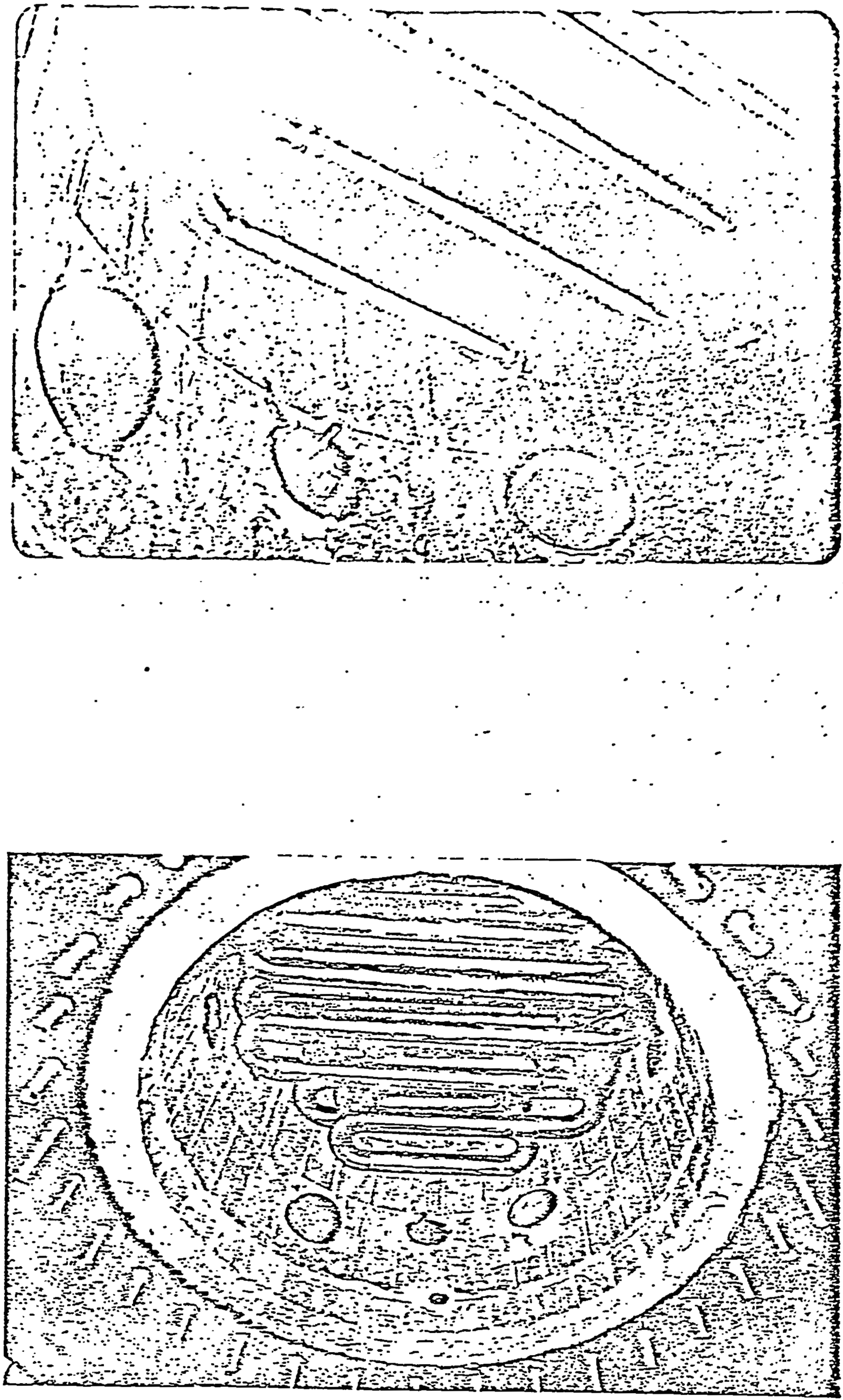

FIGURE III.7 HEAT EXCHANGER LOCATION

AB-350

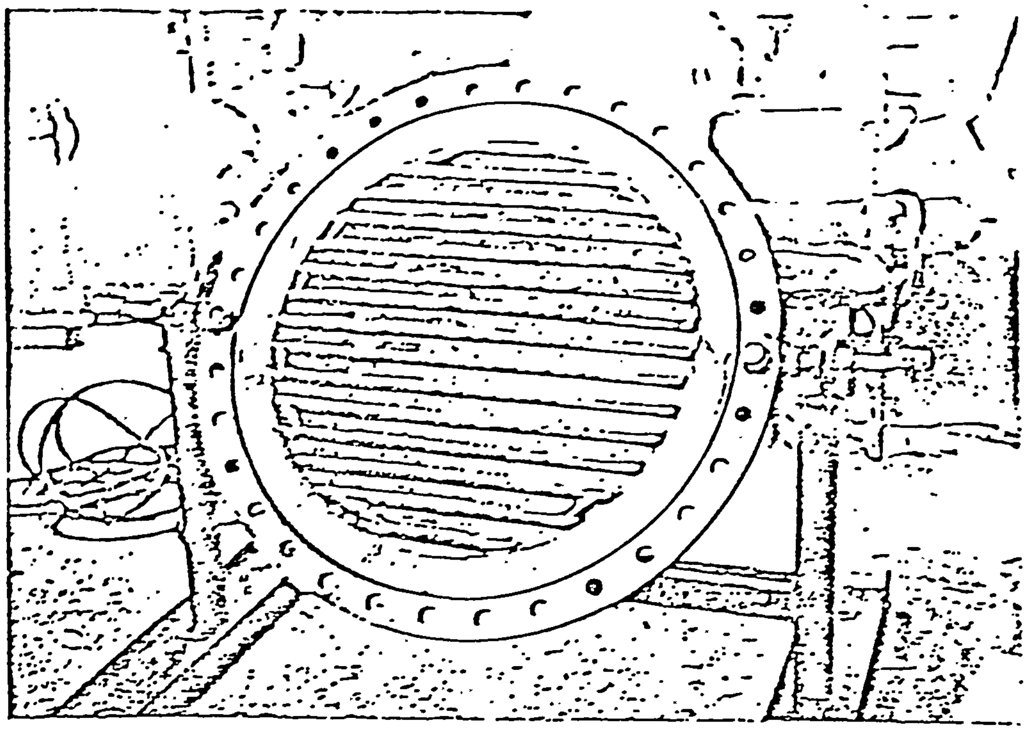

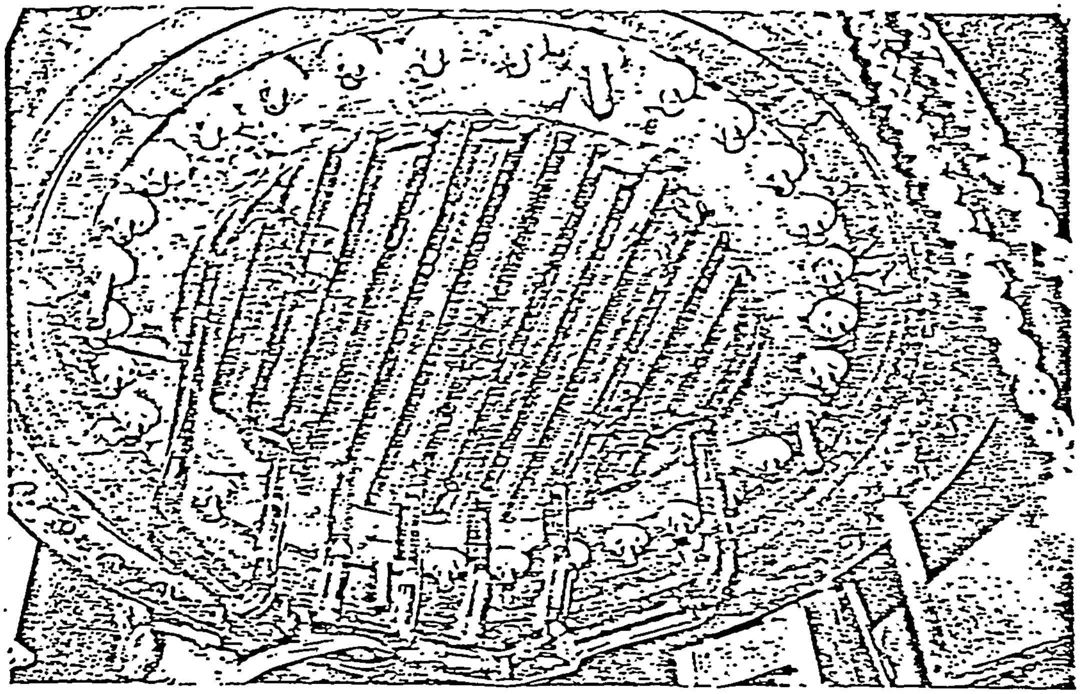

FIGURE III.10 DISTRIBUTOR PLATE, TOP AND BOTTOM VIEWS

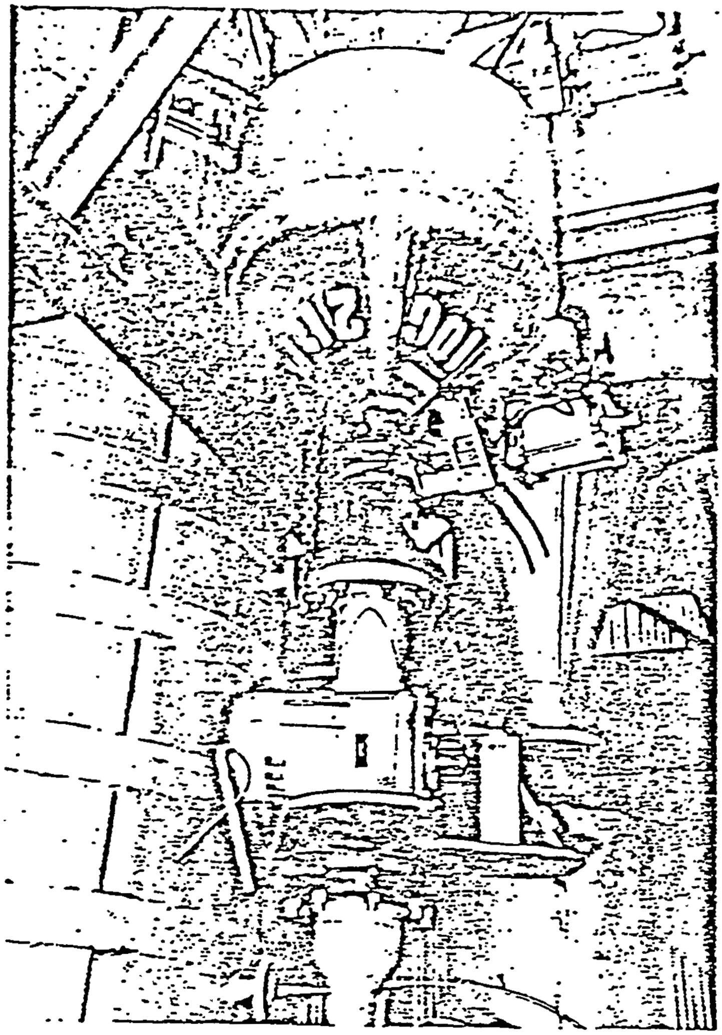

FIGURE III.12 SORBENT FEED SYSTEM

# GOALS OF THE BATTELLE
# MSFB PROGRAM

- ENABLE EXPANDED USE OF SOLID FUELS OF ALL TYPES
- DEVELOP HIGH PERFORMANCE COMBUSTION SYSTEM TO MEET CURRENT AND PROJECTED EMISSION STANDARDS
- PROVIDE A TECHNICAL BASIS FOR SYSTEM DESIGN
- COMMERCIALIZE THROUGH LICENSES

Battelle
Development Corporation

# BATTELLE MULTISOLID FLUIDIZED BED COMBUSTOR

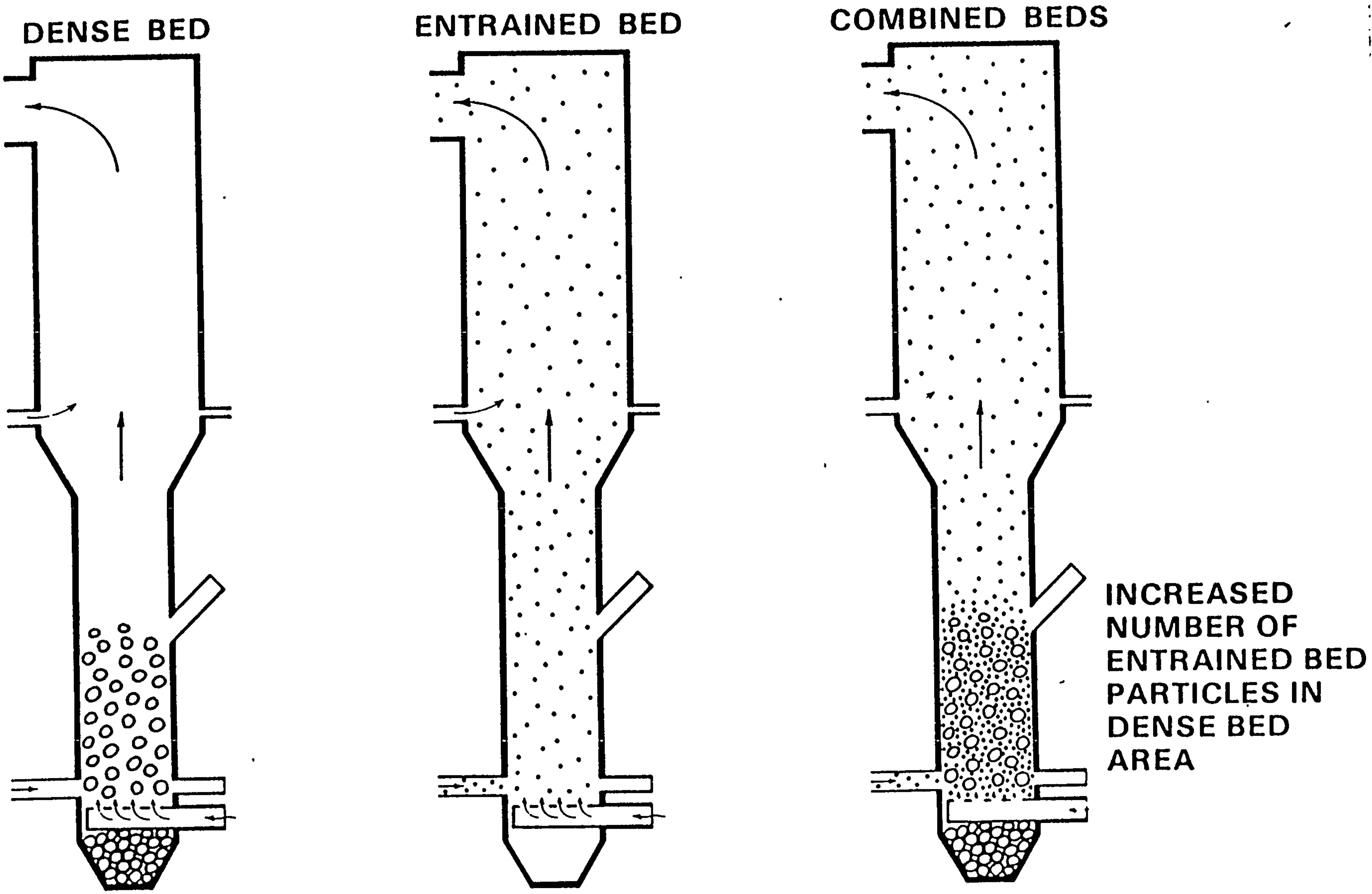

# BATTELLE MULTISOLID FLUIDIZED BED COMBUSTOR

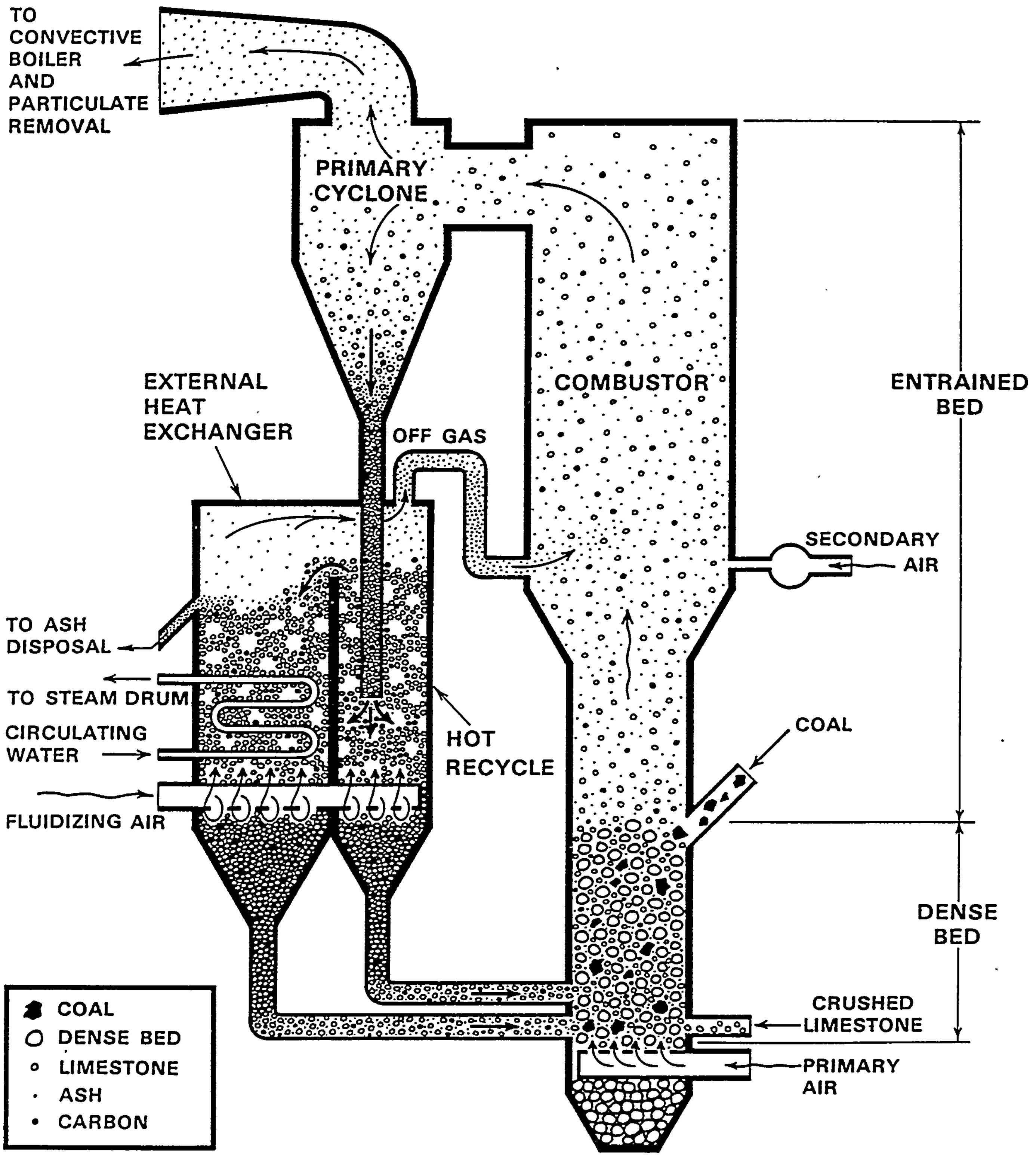

Battelle
Development Corporation

# MSFB-0.4 PILOT PLANT

## (0.4 x $10^6$ BTU/HR)

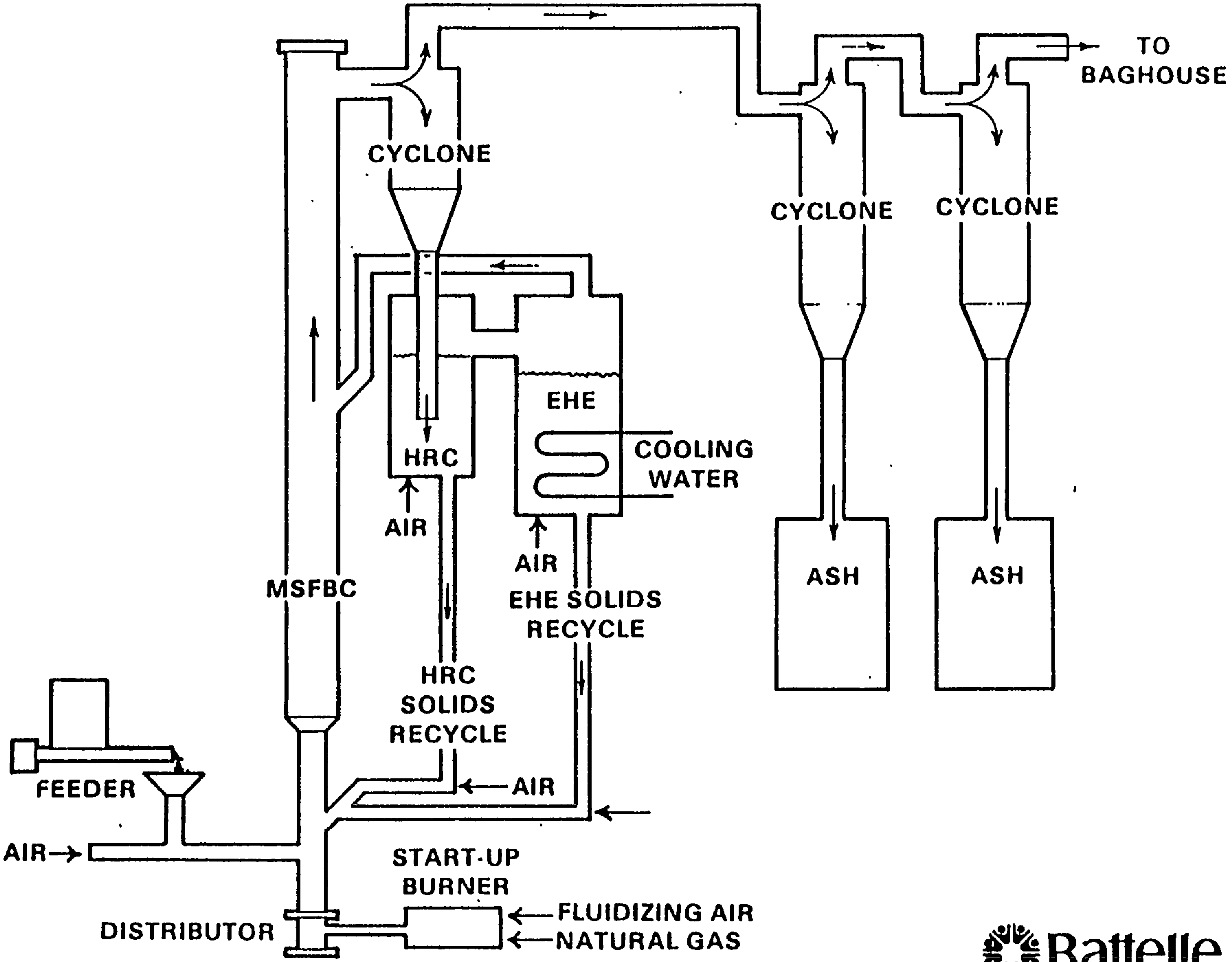

Battelle
Development Corporation

# SOLIDS RESIDENCE TIME TESTS

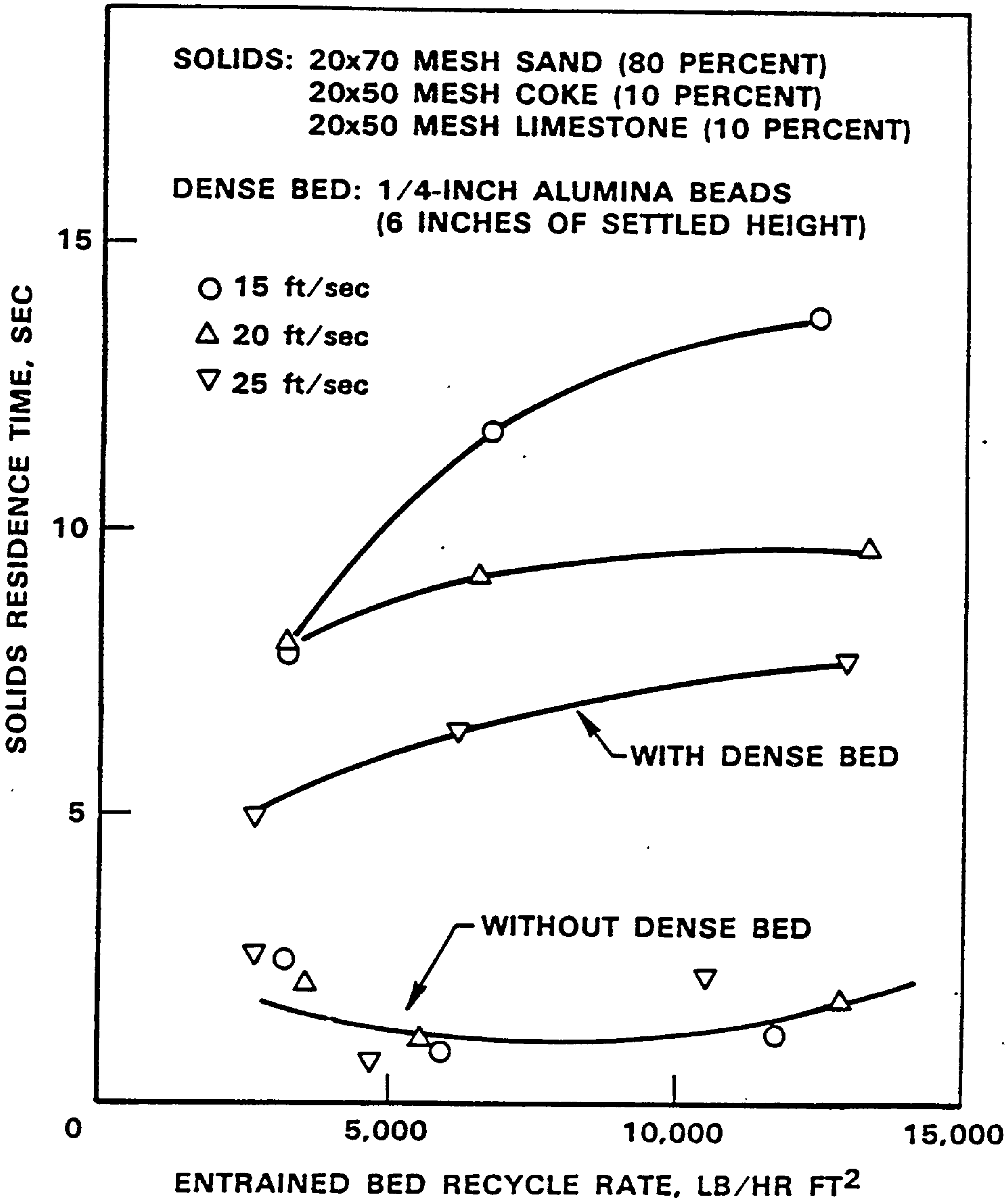

Battelle
Development Corporation

VARIETY
APPL.

# FUELS TESTED IN MSFBC

- COAL
- KRAFT LIQUOR
- WOOD WASTE
- MUNICIPAL WASTE
- SEWAGE SLUDGE
- DELAYED COKE
- FLUID COKE
- CHAR
- ROCK CONTAINING BITUMEN

Battelle
Development Corporation

# SULFUR CAPTURE IN MSFBC—EFFECT OF ENTRAINED BED RECYCLE (R)

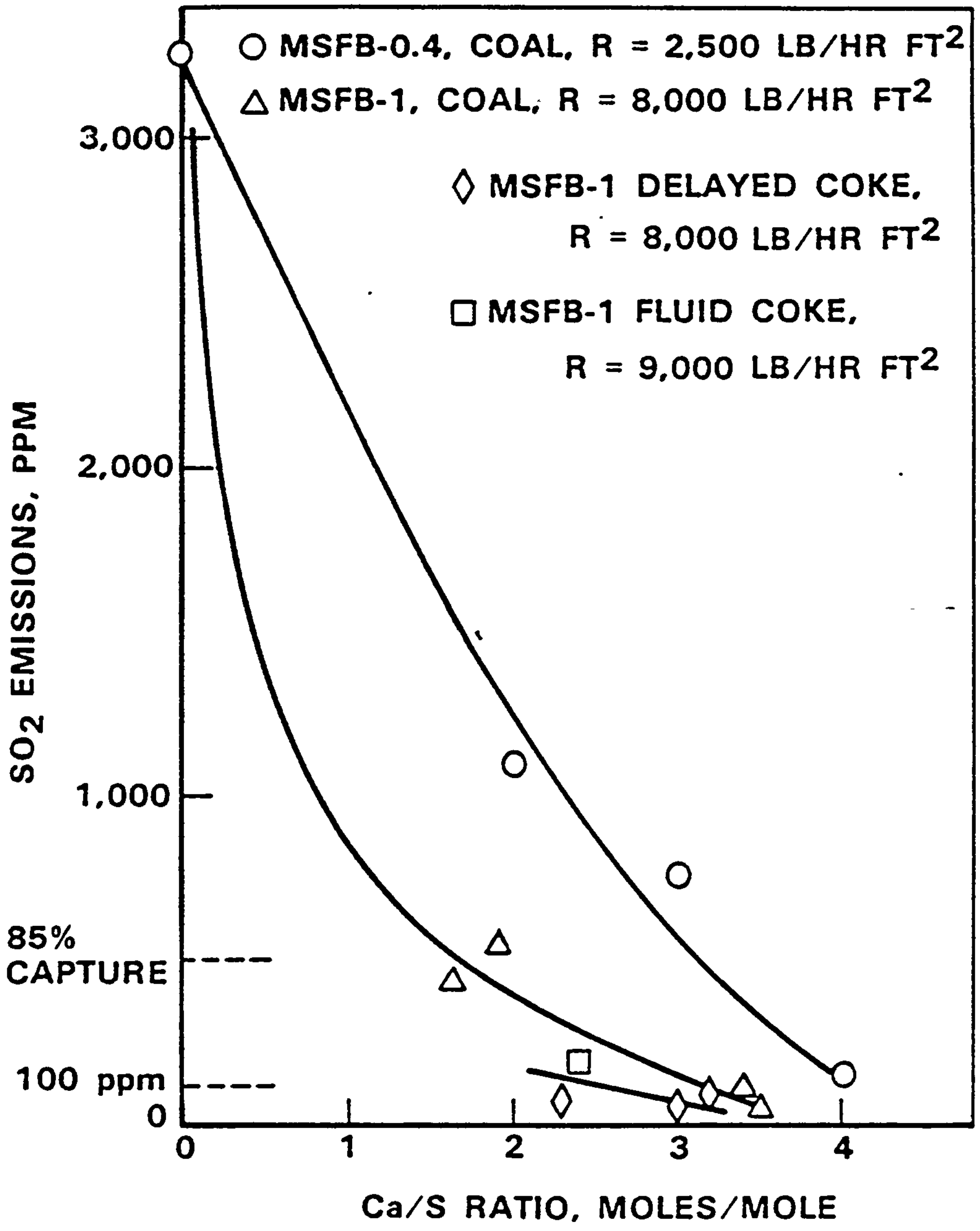

Battelle
Development Corporation

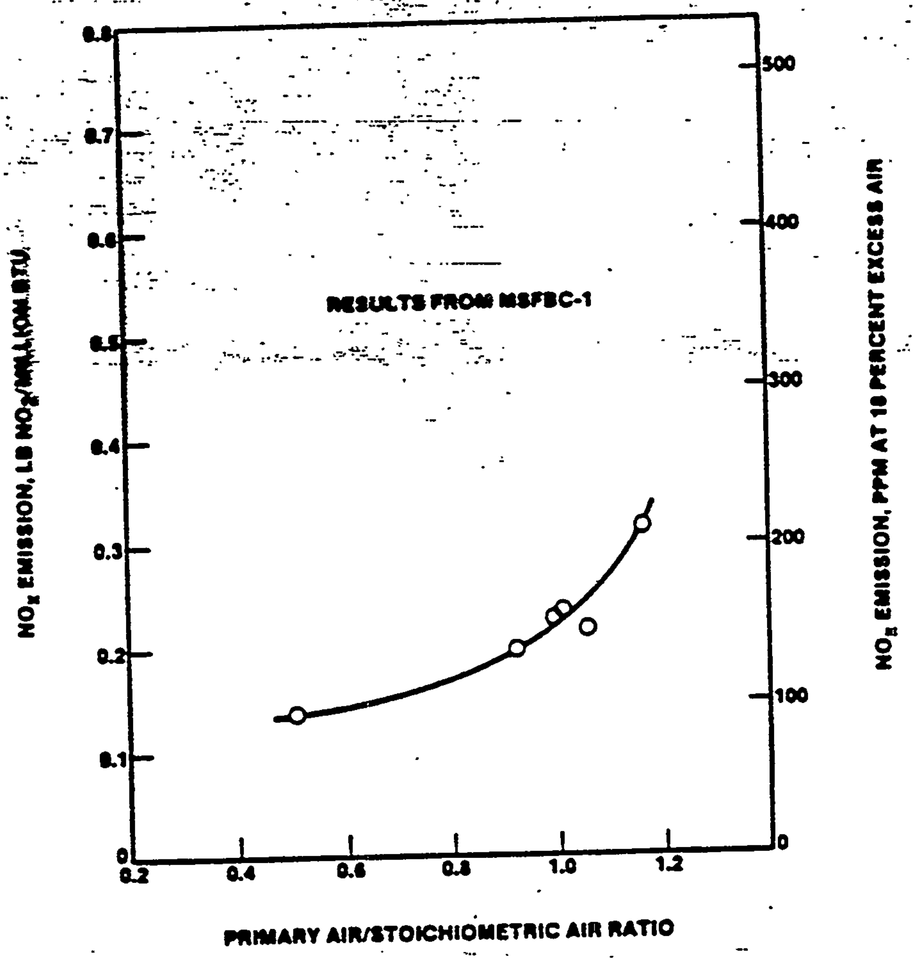

FIGURE 7. EFFECT OF PRIMARY AIR ON NITROGEN OXIDES EMISSION (COAL)

IMVL.
CONTROL

4ci F. $
JAPAN

?D
RES THE
AT TEMP.
OV

# EFFECT OF STAGED COMBUSTION ON $NO_x$ AND $SO_2$ EMISSIONS
## (DELAYED COKE)

| | MSFB-0.4 | MSFB-1 |
|---|---|---|
| Total Air/Stoichiometric Air | 1.14 | 1.28 |
| Primary Air/Stoichiometric Air | 0.51 | 0.76 |
| $NO_x$, ppm* | 100 | 76 |
| Ca/S Ratio | 2.9 | 3.2 |
| $SO_2$, ppm* | 91 | 82 |
| CO, ppm* | 412 | 162 |

*Corrected to 18% excess air.

Battelle
Development Corporation

ACT. →
D.C.→
F.C.

ETTER
E. IN
LARGER
UNIT

# COMBUSTION EFFICIENCY IN MSFBC: EFFECT OF FUEL REACTIVITY

| Fuel | Carbon Utilization* | |
|---|---|---|
| | MSFB-1 | MSFB-0.4 |
| Coal | 99 | 97 |
| Delayed Coke | 97 | 96 |
| Fluid Coke | 95 | 91 |

*Without ash recycle.

Battelle
Development Corporation

# SUMMARY OF KEY TECHNICAL FEATURES

| FEATURE | BENEFIT |
|---|---|
| INCREASED SOLIDS RESIDENCE TIME | HIGH UTILIZATION OF FUEL AND SORBENT |
| TURBULENT MIXING | FEWER FEED POINTS; SCALE-UP CONFIDENCE |
| MINIMUM TREATMENT OF LARGE SIZE FUEL | USE AVAILABLE/LOW COST FUELS |
| FUEL FLEXIBILITY | USE AVAILABLE/LOW COST FUELS |
| LIMESTONE FLEXIBILITY | MINIMIZE SUPPLY AND DISPOSAL COSTS |
| ENVIRONMENTAL CAPABILITY | COMPLY WITH STRINGENT EMISSIONS REGULATIONS |
| DESIGN FLEXIBILITY | OPTIMIZE COMBUSTION, SORPTION AND HEAT EXCHANGE; GOOD LOAD RESPONSE |

Battelle
Development Corporation

# MSFBC SIMPLIFIED PROCESS FLOW DIAGRAM FOR STEAM FLOOD GENERATOR

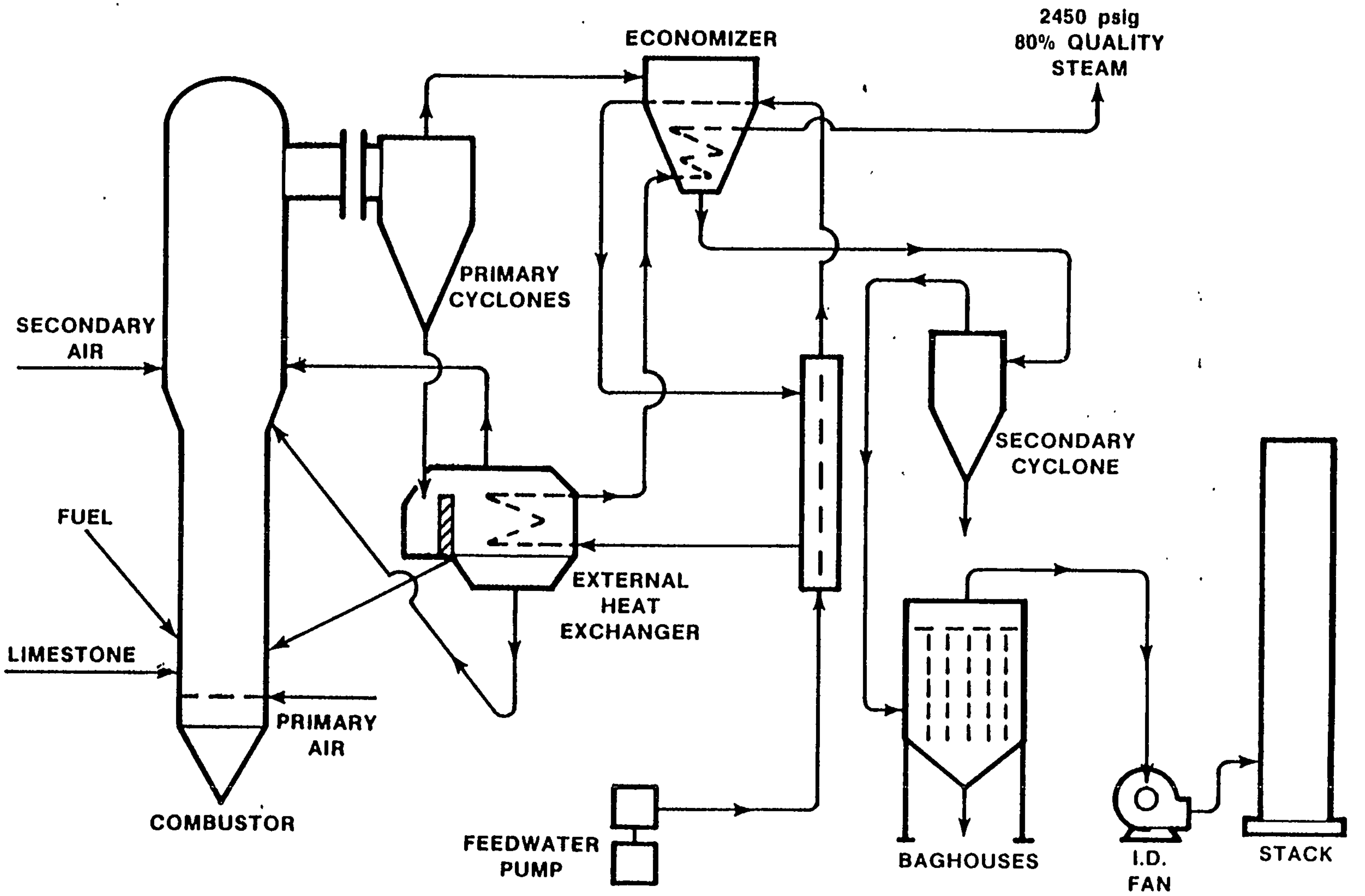

Battelle
Development Corporation

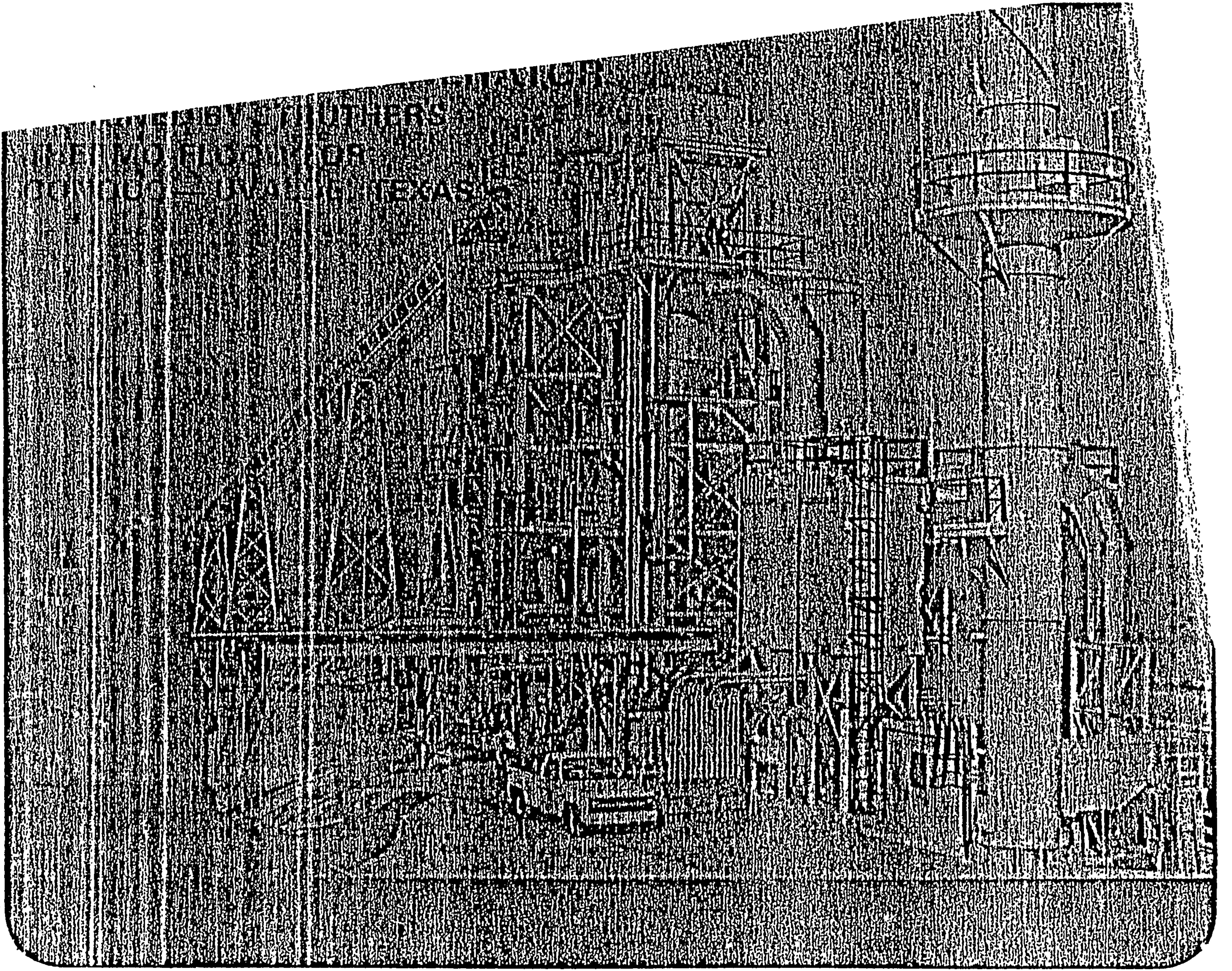
BY UTHERS
OR
TEXAS

# PERFORMANCE HIGHLIGHTS OF CONOCO MSFB STEAM GENERATOR

- STARTUP, JANUARY, 1982
- BURN AS-RECEIVED 2" X 0 COAL AND PETROLEUM COKE
  LIMESTONE 1/8" X 0
- OVERBED FUEL FEEDING THROUGH DROP PIPE
- 96 PERCENT SULFUR RETENTION AT Ca/S = 3.0
  (SULFUR CONTENT OF COAL = 1.50%, COKE = 7.08%)
- CARBON BURNUP > 97%
- BOILER EFFICIENCY, 84.4%
- $NO_x$ AND CO EMISSIONS < 100 PPMV
- 55 DAYS OF CONTINUOUS OPERATION IN LAST TEST RUN

Battelle
Development Corporation

# MSFB LICENSES, AND NEGOTIATIONS UNDER WAY

## STRUTHERS WELLS

- ENHANCED OIL RECOVERY—EXCLUSIVE WORLDWIDE
- PROCESS HEATERS (NONSTEAM)—NONEXCLUSIVE WORLDWIDE
- INDUSTRIAL AND PROCESS STEAM BOILERS—NONEXCLUSIVE FOR EUROPE, AFRICA, USSR, INDIA, AND NORTH/SOUTH/CENTRAL AMERICA [FOR PETROLEUM FUELS ONLY]
- AIR HEATING FOR GAS TURBINE POWER GENERATION—EXCLUSIVE WORLDWIDE

## FOSTER WHEELER POWER PRODUCTS (UK)

- INDUSTRIAL AND PROCESS STEAM BOILERS—EXCLUSIVE FOR EUROPE, AFRICA, INDIA, AND USSR WITH STRUTHERS WELLS EXCEPTION

## RILEY STOKER

- INDUSTRIAL AND PROCESS STEAM BOILERS—EXCLUSIVE FOR NORTH/SOUTH/CENTRAL AMERICA WITH STRUTHERS WELLS EXCEPTION
- UTILITY STEAM BOILERS—EXCLUSIVE FOR NORTH/SOUTH/CENTRAL AMERICA

FOSTER WHEELER

# Industrial Fluidized Bed Cogeneration System at the Shell Nederland Raffinaderij Europoort Tank Farm

**W. R. Kelly**
Manager
Contract Operations

**J. M. Rourke**
Project Manager
Contract Operations

**S. R. Moore**
Manager
Start-Up Operation

Foster Wheeler Boiler Corporation

In recent years development work and pilot plant studies into the concept of fluidized bed combustion have given way to ever larger and more ambitious commercial projects. The rapid movement of this technology from the laboratory into industrial application has been fueled by the two primary advantages of fluidized bed combustion: (a) the ability to burn low grade inexpensive fuel and (b) burn it in an environmentally acceptable manner.

In a major contribution to the commercialization of fluidized bed technology, Shell Nederland Raffinaderij (SNR) awarded a contract to Foster Wheeler (FW) for the design, fabrication and erection management of the world's first commercial cogeneration, coal-fired atmospheric fluidized bed boiler capable of generating superheated steam. The fluidized bed steam generator facility is located at the SNR's Europoort Tank Farm near Rotterdam in the Netherlands. It is designed as a cogeneration facility in which high pressure steam passes to a back-pressure turbine which generates 6.6 MW of electricity (refer to Figure 1). The 7 bar (103 psig) back-pressure steam is then fed to twin heat exchangers, which provide 37 MW of thermal heat energy via medium-pressure hot water to satisfy the heat demand of the tank farm.

This paper will decribe the design of the steam generator and subsystems, as well as indicate where specific design features have been modified from previous units' designs to improve performance and reliability.

**FIGURE 1** *WATER AND STEAM CYCLE*

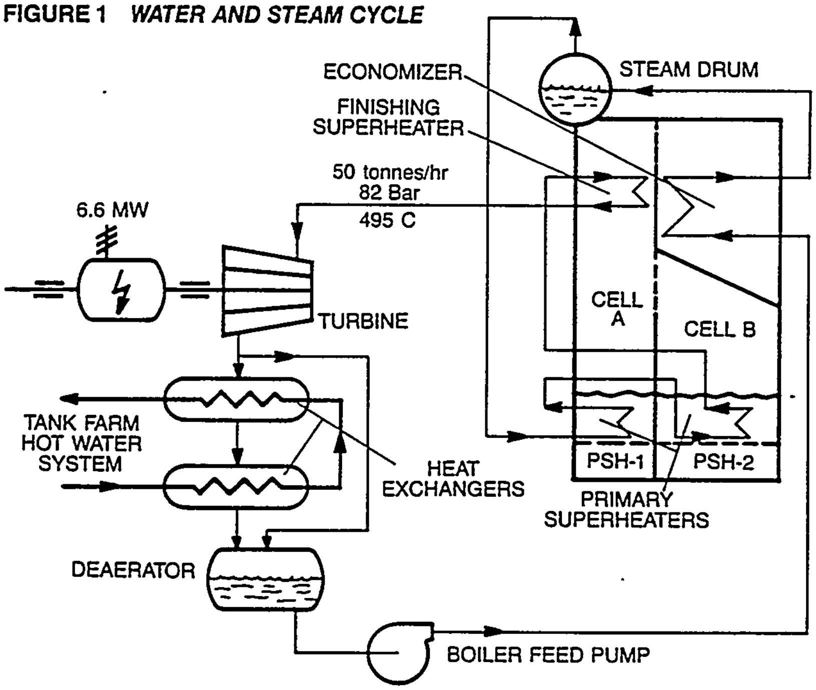

## Process Description

A fluidized bed is a mixture of granular limestone or other material supported by a nonsifting grid through which an upward flow of air passes that lifts and fluidizes the bed material. This results in a turbulent mixture of the bed particles, which assume the free flowing property of a liquid and provide an environment for stable combustion. When coal is introduced into this turbulent mixture and burned, the sulfur dioxide released by the burning coal is chemically captured by the limestone. This eliminates the need for an external flue-gas desulfurization system as used on conventional steam generators.

Since the fluidized bed operates at low combustion temperatures (about 850°C, 1560°F) the formation of nitrogen oxides ($NO_x$) is also held to a minimum. Another advantage of fluidized bed combustion is that boilers can be designed to tolerate and effectively burn a very broad range of fuel qualities, including low grade, high ash coals and solid or liquid waste materials.

Slagging, fouling and corrosion of steam generator surfaces is essentially eliminated because the fluidized bed operates at temperatures which are below the ash softening temperatures of coal fuels. Residue from the system is a dry, granular material suited for easy handling.

The SNR unit represents a considerable refinement of the basic concepts just described. In order to evaluate those refinements, a system-by-system review of the SNR unit is provided in the sequence listed below:

1) Steam Generator
2) Air and Gas System (including Gridplate Design)
3) Material Handling Systems
   a) Coal Feed
   b) Limestone Feed
   c) Spent Bed and Inert Material Handling
   d) Flyash Capture and Reinjection
4) Controls and Load Change Capability
5) Start-Up

## [illegible]

The steam generator designed for the FBC Europoort project is a natural circulation, single drum, balanced draft design. At its maximum continuous firing rate the boiler is capable of producing 50 metric tons per hour (110,250 lb/hr) of superheated steam at 495°C (923°F) and 82 bar gage (1174 psig) pressure. Steam generator efficiency of approximately 85% is predicted while maintaining a 90% sulfur dioxide capture rate. Additional information concerning design parameters is given in Table 1. Power consumption for the operation of accessory equipment is estimated at 1850 KW. The unit is top supported and consists of two adjacent fluidized bed combustion cells (refer to Figure 2).

Boiler feedwater enters at 145°C (293°F) through a bare tube economizer located within the boiler waterwalls as convection surface above Cell B. Water flows upward in two passes through horizontal tube runs in a counterflow arrangement with downflowing flue gas. This maximizes surface effectiveness and insures stable waterside flow. Water exiting the econ-

**TABLE 1**

| | | |
|---|---|---|
| STEAM FLOW | 110,250 lb/hr (50 tonnes/hr) | |
| STEAM PRESSURE | 1174 psig (82 Bar) | |
| STEAM TEMPERATURE | 923°F (495°C) | |
| FEEDWATER | 293°F (145°C) | |
| BED DIMENSIONS CELL A | 8′ x 16′4″ (2.44m x 4.99m) | |
| BED DIMENSIONS CELL B | 7′6″ x 16′4″ (2.29m x 4.99m) | |
| BED HEIGHT (EXPANDED) | 4′ (1.22m) | |
| BED TEMPERATURE | 1650°F (899°C) | |
| FLUIDIZING VELOCITY | 9 ft/s (2.74 m/s) | |
| FREEBOARD HEIGHT | 15′ (4.57m) | |
| CALCIUM/SULFUR (MOLAR RATIO) | 3 | |
| COAL FLOW | 14,071 lb/hr (6381 Kg/hr) | |
| DESIGN COAL | BITUMINOUS | |
| HEATING VALUE | 11,138 Btu/lb (25,810 KJ/Kg) | |
| ASH | 14.0% by wt. | Proximate Analysis |
| MOISTURE | 7.7% by wt. | |
| VOLATILE MATTER | 23.0% by wt. | |
| FIXED CARBON | 55.3% by wt. | |
| SULFUR | 0.50% | |
| EFFICIENCY | 84.9% | |

FIGURE 2 *BOILER PLANT GENERAL ARRANGEMENT*

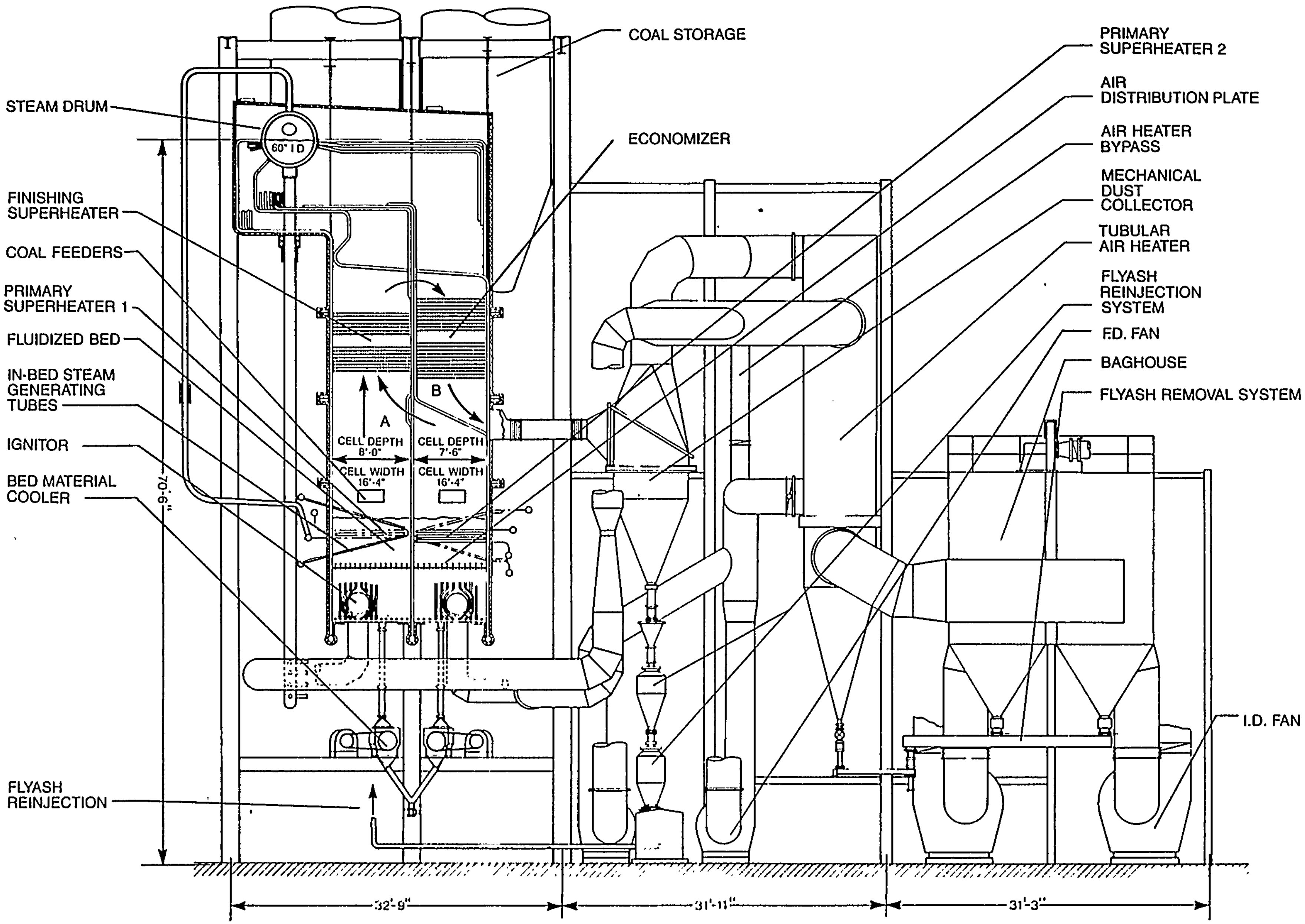

FIGURE 3 *AIR AND FLUE GAS SYSTEM*

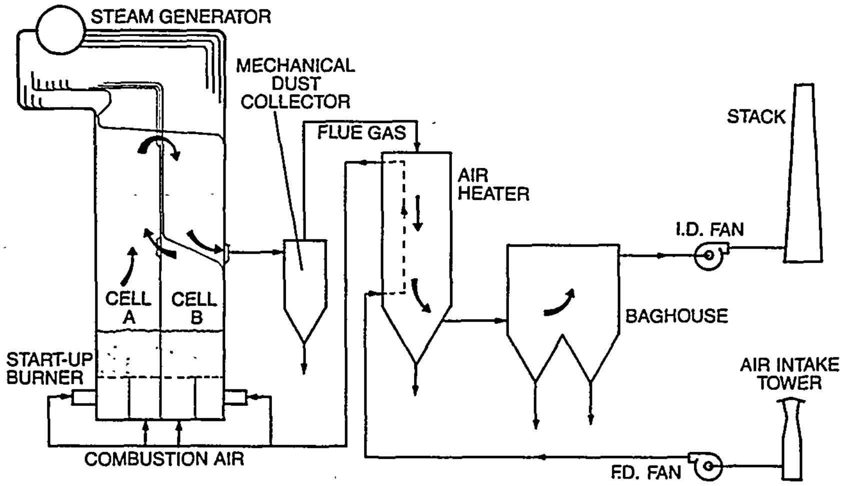

omizer is transported to the steam drum to mix with water circulating through the steam generating circuitry.

Steam generating circuitry consists of vertical finned tube waterwalls (MONO-WALL®) construction which enclose the steam generator, a finned tube partition wall which separates Cell A from Cell B, a finned tube partition wall which separates Cell B from the convection pass above it, and sloped in-bed tubes in each cell. Water from the steam drum is supplied to inlet headers for each circuit using two downcomers and multiple feeders. The steam/water mixture leaving each heated circuit is returned to the steam drum through unheated risers. Flow is by natural circulation due to the difference in density between steam-free saturated water in the downcomers and feeders and the steam/water mixture in the heated tubes and unheated risers.

The steam collected in the drum is directed to the first stage primary superheater (PSH 1) located in bed A. Steam enters the lower header and passes upward through horizontal coils to the outlet header. Upflow circuitry permits the hottest tubes to be exposed above the fluidized bed during turndown conditions, thereby subjecting them to lower heat transfer rates and correspondingly lower metal temperatures. A high mass flow rate is maintained at full load to insure adequate cooling of the tubes during low load and start-up conditions. Steam leaving PSH 1 is transferred to the second stage primary superheater (PSH 2) located in bed B.

An emergency spray is located in the transfer line between the first and second stage primary superheaters.. This spray station is normally not used, but is provided to protect the second stage primary superheater if required during upset operating transients.

Final superheat is obtained in the convection finishing superheater located above the freeboard in Cell A. Steam enters the upper header and flows downward through horizontal coils counterflow to the upflowing flue gas. The finishing superheater (and economizer) are divided into two banks to provide space for sootblowers (not installed) in the event they are required for some future alternate fuel.

Steam temperature at the finishing superheater outlet is controlled by spray attemperation in the transfer line between the second stage primary superheater and finishing superheater. Water for spray attemperation is taken from the discharge of the boiler feed pump.

Superheater sizing and location in the boiler represents an optimization for achieving a relatively flat temperature profile over the predicted operating range of 30% to 100% load while minimizing superheater spray requirements. Steam leaving the finishing superheater at 1174 psig enters a backpressure turbine/generator and is exhausted at about 100 psig. It then flows through heat exchangers to heat the circulating water used for oil tank heating. Condensate from the heat exchangers flows to the deaerator and back to the economizer and boiler via the boiler feedpumps. This arrangement provides an energy-efficient, closed-loop system.

## Air & Gas System and Gridplate Design

Air enters this system through an inlet screen and venturi and feeds the forced draft fans which are equipped with inlet vane control and discharge isolation dampers (refer to Figure 3). Air from the FD fans is routed to a tubular air heater. An air heater air bypass is provided to control the average cold end temperature of the tubular air heater and to protect the baghouse from low gas temperatures during part-load operation. During start-up, all air is bypassed around the air heater to facilitate rapid warming of the baghouse.

Air leaving the tubular air heater and air heater air bypass recombines and then passes through parallel paths to Cell A and Cell B. Each path contains an air flow measurement device and air flow control damper. After leaving the control damper the air flow is again split to provide combustion air to each segment of each cell. The path leading to the first segment to be started in each cell contains an in-duct burner which is used during start-up to warm the unit and ignite the coal. The path leading to the other segment in each cell contains a shut-off damper. This arrangement of air inlet ducts provides a mechanically simple design requiring no high temperature dampers or special start-up ducts and dampers. It is designed to provide easy transfer from start-up to segmental fluidization and from segmental fluidization to full cell operation while maintaining air flow measurement to each cell during all operating modes.