RESERVE COPY

PATENT SPECIFICATION

Application Date: Aug. 22, 1938. No. 24683/38.

Complete Specification Left: May 19, 1939.

Complete Specification Accepted: Feb. 26, 1940.

518,372

PROVISIONAL SPECIFICATION

Improvements in carrying out the Conversion of Carbon Monoxide with Hydrogen

I, GEORGE WILLIAM JOHNSON, a British Subject, of 47, Lincoln's Inn Fields, in the County of London, Gentleman, do hereby declare the nature of this invention (which has been communicated to me from abroad by I. G. Farbenindustrie Aktiengesellschaft, of Frankfort-on-Main, Germany, a Joint Stock Company organised under the Laws of Germany) to be as follows:—

In the conversion of carbon monoxide with hydrogen to form hydrocarbons containing more than 1 carbon atom in the molecule and/or liquid or solid oxygen containing derivatives of hydrocarbons it is often difficult to carry away the heat of reaction. This is particularly inconvenient for the reason that in the said conversion the temperatures must be maintained within narrow limits if obnoxious side reactions and an undesired change of the composition of the products issuing from the reaction space is to be avoided. Through the walls of the reaction vessels the heat may in most cases not be withdrawn to an extent sufficient for maintaining the desired temperature; besides, considerable differences of the temperature within the reaction space may occur especially when working with large reaction vessels.

In order to avoid the said inconveniences various proposals have already been made. Thus it has been suggested to divide the reaction space into a bundle of narrow tubes which are surrounded by a cooling agent; also the surfaces of the reaction walls have been enlarged by the insertion of ribs causing a more rapid withdrawal of the heat. Again cooling coils have been arranged in the reaction space, and also cooling agents have been directly introduced into the reacting gases. However, these measures necessitate on the one hand expensive and cumbrous apparatus and on the other hand a great diligence in the control of the course of the reaction.

My foreign correspondents have now found that in the said conversion the temperature may be maintained, even when working on a large scale, within narrow limits when working in the following manner: The reaction gases or vapours are passed so rapidly through the reaction space filled with the catalyst that the reaction takes place in one passage only to such a restricted extent that the heat of reaction evolved can be taken up by the reacting gases or vapours without an undesired rise of the temperature of the latter. The products issuing from the reaction space are then passed through a cooling system in which they are cooled to the same extent as they were previously heated during their passage through the reaction space and from which they are thereupon recycled to the reaction space. In this space the gas is then further converted and thereby heated to the same extent as in the previous passage whereupon it passes again into the cooling system. The heat of reaction evolved is thus removed from the reaction space by the reacting gases themselves.

Since in the said operation the reaction products formed remain in the recycled gas they also take part in the withdrawal of the heat which is of advantage in several respects. By the formation of greater molecules in the reaction the specific heat of the recycled gases and vapours becomes greater so that the latter may take up more heat and consequently recycling energy is saved. Furthermore the said reaction products reduce the occurrence of undesired side reactions, in particular those which are largely exothermic and with which the danger arises that they begin by reason of a local overheating at some place and extend through the whole reaction space, thereby reducing the rate of the desired conversion.

In view of the intensive mixing of the gas by the recycling operation the temperature of the gas may be maintained entirely uniform over the whole area of the reaction space; only in the direction of flow of the gases a temperature gradient is established by reason of the progressive conversion; however, the size of this gradient may be maintained at a desired value by suitable selection of the time of the sojourn of the gases in the reaction space, i.e., by regulating the velocity of

[~~Price 1/-~~]

Price 2s. 8d.

flow of the gases and by selecting a suitable height of the catalyst layer.

The rise of the temperature admitted in the catalyst space should not be so great that the temperature range favourable for the conversion is exceeded. For the said conversion of carbon monoxide with hydrogen into hydrocarbons or their oxygen-containing derivatives, temperature differences ranging up to from 40° to 50° Centigrade are admissable. Since, however, the speed of the reaction rapidly rises with increasing temperatures a temperature difference of the said size easily causes the reaction to take place mainly in the last catalyst layers while in the first catalyst layers the rate of conversion is very small, i.e., the course of the reaction is very unequally distributed over the single catalyst layers. Therefore it is preferable to keep the rise of the temperature in the reaction space smaller (for example between 3° and 20° Centigrade) so that the deviation from the optimal reaction temperature is only slight. The rise of the temperature may even be kept smaller than 3° Centigrade if the expense for the energy required for a more rapid recycling is not high.

The time of sojourn of the gases in the catalyst space depends on the activity of the catalysts since this factor determines the heat evolved per unit of catalyst space and per unit of time. Therefore the said time of sojourn is selected to be smaller the higher the activity of the catalyst and the smaller the temperature rise to be admitted. Since with higher pressures the heat capacity of the recycled gases per unit of volume is increased in a higher degree than is the speed of reaction, higher pressures require longer times of sojourn for the same rise of temperature. At temperatures above 300° Centigrade, under moderately elevated pressures (of about 40 atmospheres) and in the presence of catalyst essentially comprising iron, times of sojourn ranging from about $^1/_{10}$ to several seconds are usually employed.

Catalysts essentially comprising nickel or cobalt, which are active at about 200° Centigrade and only have a fraction of the activity of iron catalysts employed at about 300° Centigrade would require per se a longer time of sojourn. Since, however, with the said catalysts the admissible temperature difference is preferably selected very small (for example not considerably more than 2° Centigrade) the time of sojourn employed is about the same as that employed with iron catalysts. Thus for example when working under a pressure of from 10 to 25 atmospheres and in the presence of a catalyst essentially comprising sintered iron the time of sojourn may be about 1 second with a mixture of gases and vapours containing about 40 per cent. by volume of carbon monoxide and hydrogen and 60 per cent. of reaction products (carbon dioxide, hydrocarbons and steam). In this case after an initial temperature of about 315° Centigrade an increase of about 10° Centigrade occurs during the passage through the catalyst space, an amount of gas being recycled which is about 100 times as great as that of the fresh gas supplied to the system. If only a smaller temperature rise is admitted a fraction of 1 second is selected as time of sojourn and the gas is recycled more rapidly. Thus for example in order to establish a temperature difference of only about 5° Centigrade while working under otherwise the same conditions the amount of the recycled gas is selected about 200 times as great as the amount of fresh gas supplied to the system. As a rule the amount of the recycled gas is from 20 to 500 times, preferably from 50 to 200 times as great as the amount of fresh gas.

The amount by weight of the portion of the issuing gases and vapours branched off from the cycle for the separation of the desired products is equal to that of the fresh gases supplied to the system unless from the said portion gaseous constituents are returned to the cycle. The proportion of the amount of the said branched off portion to the amount of the recycled gas is therefore the same as the proportion of the amount of fresh gas to that of the recycled gas. Therefore if for example the latter amount is 100 times as great as the former the branched off portion is about 1 per cent. of the amount of the recycled gas; if the amount of fresh gas is 200 times smaller, the branched off portion is only about ½ per cent. of the recycled gas. If the gaseous constituents of the branched off portion are wholly or partly recycled this portion is selected somewhat greater than the said amount of fresh gas supplied to the system.

In order to keep the consumption of the energy necessary for recycling the gases small the layer of catalyst is preferably low and has a greater lateral extension. A suitable manner of keeping the layer of catalyst low consists in subdividing the reaction vessel by means of partitions into several chambers separate from each other, catalyst layers being arranged in each of the said chambers and the gases being supplied in several streams to the single chambers of the reaction vessel and only combined after having been separately withdrawn from each chamber. It may also be of advantage to add cold gas into the reaction vessel at a place after

the beginning and before the end of the conversion, for example between two catalyst layers, the gas stream then passing into the new catalyst layer. In this case the heat formed is taken up from the additional gas which may be a part of the gaseous reaction products having been cooled to a larger extent than the recycled gas as hereinbefore defined. This operation may be repeated as often as desired.

The process described is particularly advantageous when working under pressure since in this case the conversion may be effected in small reaction spaces and the energy required for recycling the gases is smaller. Furthermore a larger amount of heat may be withdrawn per each unit of cooling surface.

A portion of the substances issuing from the reaction space is branched off from the recycled gases for the separation of the products formed. The residual gas from this branched off portion is either withdrawn from the system or wholly or partly returned to the reaction space as for example as a cold gas. When returning these residual gases the initial gas may be completely converted. The separation of the products formed from the residual gases need not be complete in this case. Fresh gas is added to the recycled gas to the extent in which the concentration of the former is reduced in the latter.

It is of particular advantage to return only a portion of the residual gases separated from the desired products to the reaction space if the difficultly removable bye-products or impurities contained in the fresh gas shall not become too much enriched in the treated gas.

Also two recycling systems may be arranged in series with an intermediate removal of the products formed. In this case so much gas is branched off from the first cycle that an enrichment in this cycle of the products formed or of the impurities takes place only to a restricted extent. The gas branched off and separated from the desired products formed is then led into the second cycle in which the conversion is completed. In this manner a higher rate of conversion per space and time is attained in the first cycle.

The invention will be further understood with reference to the accompanying drawings which shew in a diagrammatic manner plants in which the process described may be carried out with advantage.

In the plant shewn in Figure 1 the cold fresh gas is introduced at A into the cycle of the hot gas forced through the system by pump C, then mixed in a mixing device B with this hot gas and thereupon introduced into the reaction vessel D in which it undergoes conversion in the catalyst layer E and simultaneously becomes hotter by the evolved heat of conversion. In the subsequent steam producer F the reaction products are cooled to such an extent that when mixed with the fresh gas they have the same temperature as prevails at the inlet of the reaction vessel. A small portion of the stream is branched off behind the steam producer in order to recover therefrom after cooling in cooler G and/or after absorption the desired reaction products by separation in separator H. The preheater I arranged before the reaction vessel has only the purpose of bringing the initial gas at the beginning of the operation to the reaction temperature. This preheater is then shut off. The liquid products are withdrawn at L, the residual gases at K.

Figure 2 shews a plant which is similar to that shewn in Figure 1, but in which the portion of the stream branched off from the recycled gas is again added to this gas after the separation of the liquid reaction products, a complete conversion of the initial gases thus being made possible. To this end the gases separated from the liquid products are passed by way of compressor M into the washer N in which they are treated with a washing liquid introduced from above by means of pump O. The portion of the gases not having been absorbed by the washing liquid flows through pipe P to the place of introduction of the fresh gas A. The washing liquid is passed from vessel N into the separator Q, freed in this vessel from the absorbed gases and vapours and thereupon recycled by means of pump O into the washer N. The gases and vapours separated from the washing liquid in separator Q are withdrawn therefrom through pipe R.

Figure 3 shews a plant for the combination of operation described with the cooling of the reacting gases by means of a cold gas. Part of the products issuing from the reaction vessel is more strongly cooled than the recycled gas and then introduced into the reaction vessel at one or more places between two catalyst layers. In this manner the reaction mixture having passed through a catalyst layer is cooled to an appropriate temperature and may pass without overheating through a further catalyst layer. In this manner the amount of gas recycled per each unit of time may be reduced to a fraction of that to be recycled when no additional cold gas is introduced into the reaction space. In the operation carried out in the plant shewn in Figure 3 a suitable amount of the gaseous portions of the

part branched off from the recycled gas is employed as cold gas; it is passed from the upper end of the washer N through pipe S and after being mixed with fresh gas it is introduced into the reaction vessel D at a medium height of the latter.

The described conversion of carbon monoxide with hydrogen to form hydrocarbons containing more than one carbon atom in the molecule and/or oxygen-containing derivatives of hydrocarbons is preferably effected under pressures between about 10 and 50 atmospheres, but also higher pressures of for example 100 to 200 atmospheres or more may be employed. The temperatures usually range between 150° and 450°, preferably between 200° and 400° Centigrade (the latter range when employing catalysts containing iron as essential catalytic constituent). The heat of reaction evolved in this conversion is considerable and in the case of overheating undesirable side reactions, such as formation of methane and deposition of carbon, readily take place to an appreciable extent when working in the presence of metals of the 8th group of the periodic system as catalysts. These inconveniences are avoided when carrying out the said conversion in the above described manner. As a rule the velocity of flow of the gases and the addition of the fresh gas are selected so that the temperature difference between the inlet of the reaction vessel and the outlet thereof is below 30° Centigrade; more particularly a temperature difference below 10° Centigrade, for example of about 5° Centigrade is maintained.

The following Examples will further illustrate the nature of the present invention but the invention is not restricted to these Examples.

EXAMPLE 1.

A mixture of 1 part of carbon monoxide and 2 parts of hydrogen is introduced under a pressure of 15 atmospheres into the hot cycle of a plant as shewn in Figure 1, the velocity of flow of the recycled gases is selected so that the temperature difference between the inlet of the reaction vessel and the outlet thereof is about 5° Centigrade. The medium temperature in the catalyst space is about 320° Centigrade. The catalyst consists of sintered iron produced by decomposition of iron carbonyl and heating the resulting iron powder. The portion of the stream branched off behind the outlet of the reaction vessel is adjusted so that the recycled gas contains only about 3 per cent. of carbon monoxide and consists for the greater part of gaseous and vaporous reaction products. In this manner the temperature may be maintained completely constant and the conversion may be carried through uniformly.

EXAMPLE 2.

7000 cubic metres (measured under ordinary pressure) of a gas mixture consisting of 2 parts of carbon monoxide and 3 parts of hydrogen are passed under a pressure of 15 atmospheres through a reaction vessel having a content of 1 cubic metre and being filled with an iron catalyst. The velocity of flow of the gases is so adjusted that the temperature within the reaction vessel rises by about 10° Centigrade. To this end the amount of the recycled gas is selected 100 times as great as the amount of fresh gas supplied to the system. This results in a time of sojourn of the gas in the catalyst space of about $\frac{3}{4}$ second at each passage, the space being supposed as empty. If the reaction space is 50 centimetres high the velocity of flow of the gas must be 65 centimetres per second in order to obtain the said time of sojourn. The residual gas has the following composition:—

5 per cent. by volume of carbon monoxide.
35 per cent. by volume of hydrogen.
27 per cent. by volume of carbon dioxide.
13 per cent. by volume of steam.
17 per cent. by volume of hydrocarbon gases and vapours and
3 per cent. by volume of nitrogen.

From the recycled gas a portion is withdrawn which is equal to that of the fresh gas supplied. In this manner about 70 per cent. of the fresh gas are converted and about 1 ton of liquid, gaseous and solid hydrocarbons is obtained per day and cubic metre of catalyst space in addition to a small amount of oxygen-containing derivatives of hydrocarbons. The energy necessary for recycling the gases amounts to only a fraction of that necessary for the compression of the fresh gas.

The efficiency of the catalyst is scarcely influenced by the composition of the recycled gas as compared with a treatment of an undiluted gas mixture, though this recycled gas contains only small amounts of carbon monoxide.

Dated this 22nd day of August, 1938.

J. Y. & G. W. JOHNSON,
47, Lincoln's Inn Fields, London, W.C.2.
Agents.

COMPLETE SPECIFICATION

Improvements in carrying out the Conversion of Carbon Monoxide with Hydrogen

I, GEORGE WILLIAM JOHNSON, a British Subject, of 47, Lincoln's Inn Fields, in the County of London, Gentleman, do hereby declare the nature of this invention (which has been communicated to me from abroad by I. G. Farbenindustrie Aktiengesellschaft, of Frankfort-on-Main, Germany, a Joint stock Company organised under the Laws of Germany) and in what manner the same is to be performed, to be particularly described and ascertained in and by the following statement:—

This invention relates to improvements in the production of hydrocarbons with more than one carbon atom in the molecule, contingently together with minor amounts of liquid or solid oxygen-containing derivatives thereof by conversion of carbon monoxide with hydrogen. Prior to the present invention the regulation of the temperature in this reaction could only be attained by complicated measures, whereas in the production of hydrocarbons of the nature of benzine, products satisfactory as regards their knocking properties could not be obtained in a simple manner. It is absolutely necessary to keep the reaction temperature within definite limits in order to prevent side-reactions or an undesired change of the product, such as the formation of methane and the deposition of soot on the catalyst.

In the said conversion large amounts of heat are evolved and the withdrawal thereof, necessary for maintaining the desired reaction temperature, often causes difficulties. Withdrawal of heat through the wall of the vessel is sometimes insufficient or is complicated whereas, when employing large reaction vessels, a uniform distribution of the temperature could hitherto only be obtained by expensive and complicated construction of the apparatus.

In the industrial development of the conversion of carbon monoxide with hydrogen the reaction space has been divided into bundles of narrow tubes which are bathed by a cooling agent; further the surfaces of the reaction space have been enlarged by the construction of ribs to obtain a more rapid removal of the heat. In the reaction space also cooling coils or bundles of cooling pipes have been constructed, usually provided with a large number of ribs or all welded into a large number of sheets in order to increase the cooling surface, or cooling agents have been introduced direct into the reacting gases. These measures, however, require on the one hand expensive and complicated plants and on the other hand great care in watching the course of the reaction.

In the said process it is already known to return to the reaction space unconverted initial gases or diluent gases after the desired products were removed therefrom back to the reaction space.

It has now been found that improvements are obtained in the production of hydrocarbons with more than one carbon atom in the molecule, contingently together with minor amounts of liquid or solid oxygen-containing derivatives thereof by conversion of carbon monoxide with hydrogen by returning to the reaction space gases which have already been subjected to the reaction, the volume of the gases returned per unit of time being at least 20 times, preferably at least 50 times, that of the fresh gas introduced in said unit of time.

As a rule it will not be economical to return to the reaction space a volume of gas greater than 500 times the volume of fresh gas introduced, although where desired such larger amounts, for example, 1000 times the volume of fresh gas may be recycled. Preferably the volume of gas returned to the reaction space lies within the limits of between 50 and 200 times that of the fresh gas introduced.

The present method of working allows of an accurate regulation of the temperature in the reaction space. This temperature regulation is carried out by cooling the gases to be returned to the reaction space to adjust the proper temperature at the entrance of the reaction space.

The gases to be returned to the reaction space are preferably cooled to about the temperature prevailing at the entrance of the reaction space, in general to a temperature somewhat above said temperature, since the fresh initial gases can then be introduced in a cold state, whereby the mixture of gas recycled and fresh gas attains the required temperature.

Usually part of the gases leaving the reaction space is branched off and reaction products are separated therefrom. The branching off may be done after the gases issuing from the reaction space are cooled to about the temperature required for temperature regulation.

The part of the gases leaving the reaction space from which the desired products are separated must in continuous operation have the same weight as the fresh gas introduced, in case the unconverted gaseous constituents contained therein are not led back to the reaction space. If the unconverted gaseous constituents are wholly or partly led back, the said part must be larger than the amount of fresh gas introduced, but also in this case the total amount of products withdrawn from the process is equal in weight to the fresh gas introduced.

By this return of the remaining gas the initial gases can be converted to a very large extent into the desired products and it is possible thereby to maintain a lower concentration of reaction products in the cycle. The separation of the desired products from the branched off partial stream need also not be complete in this case.

The remaining gas will not be led back entirely if by-products difficult to separate or impurities originally present in the initial gas are not to be allowed to accumulate too much in the cycle, and a part thereof will be removed in order to keep the concentration of the impurities within desired limits.

The conversion of carbon monoxide with hydrogen into hydrocarbons with more than one carbon atom in the molecule in accordance with the present invention may be carried out at any desired pressure, preferably, at pressures between about 10 and 50 atmospheres. Still higher pressures, such as, for example, 100 or 200 atmospheres or more may, however, also be employed. Also lower pressures or atmospheric pressure come into question. The temperatures are selected within the range of 150° to 450° Centigrade, and in general between 170° and 400° Centigrade. The composition of the initial fresh gases may vary within wide limits. In general the amount of carbon monoxide may vary between $\frac{1}{4}$ and 4 times the amount of hydrogen, and preferably the amount of carbon monoxide lies between $\frac{1}{2}$ and twice the amount of hydrogen measured by volume.

As catalysts those known in the art may be employed. The catalyst materials may, if desired, be supported by a carrier such as silica gel or diatomaceous earth. The catalysts may also contain suitable promotors such as alkali metal compounds. Thus iron catalysts may be used, preferably those obtained by decomposition of iron carbonyl, followed by subsequent sintering of the iron flocks or powder obtained thereby, and these are preferred catalysts in accordance with the present invention.

Catalysts obtained by reduction of iron compounds and sintering or fusion of the product may also be employed with advantage. Catalysts containing cobalt and/or nickel or alloys of these are also useful. They may be employed in the form of so-called skeleton catalysts or on carriers such as diatomaceous earth. Activation with thorium oxide and/or magnesium oxide of these catalysts is usually of advantage. Ruthenium catalysts preferably on carriers also give good results.

The increase in temperature permissible in the reaction space is dependent on the specific catalyst employed and is in general at the utmost 50° and preferably at most 40° Centigrade. With nickel or cobalt catalysts, which are active at about 200° Centigrade, the temperature range, which gives the most suitable results, is only relatively small, and therefore the increase in temperature with these catalysts is preferably maintained below 30° Centigrade and it is best to maintain the increase in temperature with these catalysts below 10° Centigrade, for example, at about 5° or 2° Centigrade. With iron catalysts with which the reaction temperature may be above 300° Centigrade, in general a somewhat higher increase in temperature is permissible.

Since the reaction velocity increases very rapidly with an increasing temperature, a wide temperature range has the result that in the catalyst layers first coming into contact with the reagents only a small conversion and in the further layers a strong conversion takes place with a large evolution of heat. In these circumstances the reaction conditions become unstable, so that it is preferred to keep the increase in temperature within narrow limits, in order to maintain the temperature at a level which is only little different from the optimum reaction temperature.

According to the present invention, the heat evolved in the reaction is practically completely carried away by the reaction gases themselves. The amount of heat which can be taken up by these gases depends on the specific heat and the amount thereof, and further depends on the increase in temperature allowed in each specific case. In the process according to the present invention the reaction products formed partly remain in the recirculated gas, and therefore participate in the taking up of heat. Since the specific heat of the products formed is larger than that of the initial synthesis gas, the heat capacity of the circulating gas is increased thereby.

The evolution of heat per unit of time depends on various factors, such as the

activity of the catalysts, the composition of the gases, in particular on the concentration of the constituents taking part in the reaction and the temperature (since at higher temperatures the reaction velocities increase, so that the heat evolved per unit of time will be higher at higher temperatures under otherwise similar conditions) and therefore the rate of flow of the reaction gases may vary within wide limits.

The rate of flow may be expressed by the so-called duration of sojourn, which is conveniently defined as the time that a given volume of reaction gas measured under the prevailing temperature and pressure is present in the same volume of reaction space, and is calculated by dividing the volume of the empty reaction space by the total volume of gas introduced under the prevailing conditions per unit of time in which the duration of sojourn is expressed.

Thus, for example, under a pressure of 10 to 25 atmospheres and in the presence of a catalyst of sintered iron a duration of sojourn of about 1 second is adjusted, if the gas-vapour mixture introduced into the reaction space consists of 40 per cent. by volume of carbon monoxide and hydrogen and of 60 per cent. of reaction products (carbon dioxide, hydrocarbons and water vapour). With an initial temperature of about 315° Centigrade an increase of about 10° Centigrade then occurs. A volume of gas is circulated, which corresponds to about 100 times the volume of fresh gas introduced. If only a smaller increase in temperature is permissible, fractions of a second are taken as the duration of sojourn and the gas is circulated considerably more rapidly. Thus, for example, with an increase in temperature of 5° Centigrade under otherwise the same conditions a volume of gas which is about 200 times the volume of the fresh gas introduced must be recirculated under these circumstances.

In general the duration of sojourn of the reaction gases in each passage through a reaction space controlled by a given cycle is between 0.1 and 5 seconds in the process in accordance with the present invention.

Owing to the thorough mixing produced by the circulation, the temperature of the reacting gases can be kept completely uniform over the total cross-section of the reaction vessel and only in the direction of flow of the gas is an increase in temperature due to the progress of the conversion observed.

When only a small increase in temperature is permissible, a large amount of gases per unit of time must be recirculated, so that a higher circulation energy is required. When working under increased pressures the required energy is smaller.

In order to keep the circulation energy small, it is in general advantageous to provide relatively shallow catalyst layers, say 1 metre in depth or so, and consequently to spread them over a large area.

The reaction vessel may be subdivided by partitions into chambers, in which the catalyst layers may be arranged. The initial gas may be divided among the various chambers. The reaction products may be separately withdrawn from each chamber and only then combined. It may also be advantageous to combine the hot circulation of the gases with the addition of cool cooling gas to the reaction vessel at a point where the reaction gases have not yet passed through the entire catalyst, for example, between two catalyst layers. In this case after leaving a catalyst layer the heat formed is taken up by the added gas, for example, by a part of the gases coming from the reaction space, which are cooled to a lower temperature than the hot circulating gas, whereafter the gas stream enters a further catalyst layer. This measure may be repeated many times at will.

The method of temperature regulation of the reaction space with hot circulating gas in accordance with the present invention may, if desired, be carried out in combination with other cooling methods. Thus the gas remaining after the removal of the desired products from the branched off part may be led back at least for a part, as cool cooling gas.

Again the reaction space may, where this does not lead to undesired complication, in part be cooled by indirect contact with temperature regulating fluids, as, for example, water boiling under a suitably regulated pressure.

The reaction space may be sub-divided. Thus, two or more cycle systems may be connected one behind the other, if desired, with a separation of products therebetween. From the first system so much gas is branched off, that the conversion takes place only to such an extent, that an enrichment of the reaction products or of the impurities only takes place to a limited degree in the first cycle. After separation of the reaction products, the branched off gas enters into the second cycle, in which the conversion is carried to an end. Thereby a higher conversion velocity is obtained in the first cycle.

Where the reaction space has been subdivided and several cycle systems are employed the volume of cycle gas introduced per unit of time by an individual cycle system to the reaction space may

be less than 20 times the volume of fresh gas. It is, however, essential in accordance with the present invention that the sum of all volumes of cycle gas returned to the reaction space should be at least 20 times the sum of all volumes of fresh gas introduced in a given unit of time to the reaction space.

The drawings accompanying the Provisional Specification show plants, in which the process described may be carried out with advantage.

In the plant shown in Figure 1 the cold fresh gas is mixed at A with the hot circulating gas coming from the hot circulating blast C. The mixture is passed through a mixing space B and then enters the reaction vessel D, in which it is converted in the catalyst layer E and attains a higher temperature within the limits permissible as a result of the reaction heat evolved. In the high pressure steam boiler F connected behind the reaction space the circulating gas is cooled down so far, that it again attains when mixed with the entering fresh gas the temperature desired at the entrance of the vessel. A small partial stream is branched off behind the steam boiler, in order to obtain from it after cooling in cooler G and/or absorption the reaction products by separation in separator H. The preheater J placed before the reaction vessel only serves for bringing the initial gas to the reaction temperature at the commencement of the operation; afterwards it is disconnected. The liquid products are withdrawn at L, the remaining gases at K.

Figure 2 shows a plant, which is similar to that of Figure 1, but in which after separation of the liquid reaction products the branched off partial stream is led back again into the cycle for the purpose of a complete utilisation of the initial gases. The gases separated off from the liquid constituents are passed through pump M into the washing vessel N, in which they are treated with a washing liquid for example of hydrocarbon oil introduced at the upper end by pump O. The part of the gases not absorbed by the washing liquid flows through tube P to the point of admission of fresh gas at A. After leaving vessel N the washing liquid is freed from the gases and vapours absorbed in it in the separator Q and thereupon again led into the washing vessel N by means of pump O. The gases and vapours are withdrawn at R.

Figure 3 shows a plant for the combination of the process described with cooling by cool gas.

A part of the products leaving the vessel is cooled down further than the bulk of the circulating gas and then led into the reaction vessel at one or more places, which lie between two catalyst layers; the reaction mixture after flowing through a catalyst layer is thus again cooled to a suitable temperature and may flow through a further catalyst layer without undesired rises in temperature occurring. In this manner the amount of the hot circulating stream may be considerably reduced. In the plant according to Figure 3 a suitable amount of the gaseous constituents of the partial stream branched off from the hot cycle to be employed as cool cooling gas is introduced from the upper end of the washing vessel N through tube S, after mixing with fresh gas, in the middle of the reaction vessel D.

The present invention makes the employment of large reaction vessels of simple construction possible, containing, for example, one or more layers of catalyst 1 metre in depth and 3 metres in diameter. An advantage of the process is that it allows of the production of a highly knock-proof benzine.

Other products obtained in accordance with the present invention are gaseous olefines, such as propylene and butylene, gas oils and paraffin wax. These may be employed for any purposes known therefor or as initial materials for the manufacture of products of the oil industry or chemical industry. For example, butylene may serve as an initial material for the production of octanes. The gas oils may be employed as diesel fuels or diesel fuel constituents or as initial materials for the production of these products, the solid hydrocarbon products may serve as initial materials for oxidation to fatty acids or for the production of lubricating oils.

The following Examples will further illustrate the nature of the said invention and in what manner the same can be carried out in practice, but it should, however, be understood that the invention is not limited to said Examples.

EXAMPLE 1.

A mixture containing 4 parts by volume of carbon monoxide and 5 parts by volume of hydrogen, obtained in a water gas producer, and in which the content of sulphur has been reduced to less than 5 milligrams per cubic metre, is introduced under a pressure of 20 atmospheres in an amount of 700 cubic metres per hour measured at atmospheric pressure and room temperature into the hot cycle of a synthesis plant as illustrated in Figure 1. The catalyst consisting mainly of sintered iron which has been produced by decomposition of iron car-

bonyl, is contained in the reaction vessel in a layer 1 metre deep. The cycle gas is circulated so rapidly that 70.000 cubic metres per hour, measured at atmospheric pressure and atmospheric temperature, pass through the reaction space per hour. At the entrance to the reaction space a temperature of 320° Centigrade is maintained and at the outlet a temperature of 330° Centigrade. So much heat is taken up from the gases issuing from the reaction vessel in cooler F (a high pressure steam boiler) that after admixture of fresh gas, the cycle gas returned to the reaction vessel has a temperature of 320° Centigrade. An amount of gas equal in weight to the weight of fresh gas introduced to the system is withdrawn from the hot cycle. The products formed are separated from the portion withdrawn by cooling. Per hour there are obtained 96 kilograms of solid, liquid and gaseous products of the following composition:

17 kilograms of methane and ethane.
20 kilograms of ethylene and gaseous hydrocarbons with 3 and 4 carbon atoms in the molecule which consist mainly of olefines.
42 kilograms of benzine boiling up to 200° Centigrade, which is highly knock-proof.
10 kilograms of middle oil (200—400° Centigrade).
1 kilogram of solid paraffin wax.
6 kilograms of alcohols, mainly ethyl-alcohol, which are contained in the water formed.

Example 2.

7000 cubic metres (measured under ordinary pressure) daily of a mixture consisting of 2 parts of carbon monoxide and 3 parts by volume of hydrogen are passed under a pressure of 15 atmospheres through a catalyst space having a volume of 1 cubic metre (filled with an iron catalyst) and are converted therein. The temperature at the inlet is adjusted at 320° Centigrade and during the conversion an increase in temperature of 10° Centigrade is permissible. For this purpose the amount of the circulated gas is taken about 100 times larger than the amount of fresh gas and the cycle gas is cooled almost down to 320° Centigrade by passing through a high pressure steam boiler. A duration of sojourn of the gas measured by volume under the pressure prevailing in the catalyst space of about $\frac{3}{4}$ second in each passage through the reaction space is required, the calculation of duration of sojourn being based on the supposition that the reaction space is empty. If the catalyst space has, for example, a height of 50 centimetres, a linear velocity of flow of the gas of 65 centimetres per second is necessary for maintaining the said duration of sojourn. The gas pumped back has the following composition:

5 per cent. by volume of CO
35 per cent. by volume of H_2
27 per cent. by volume of CO_2
13 per cent by volume of H_2O vapour
17 per cent. by volume of hydrocarbon gases and vapours
3 per cent. by volume of N_2.

An amount by weight, which is equal to that of the fresh gas introduced, is withdrawn from the circulating gas. In this manner roughly 70 per cent. of the fresh gas are converted and daily about 1 ton of liquid, gaseous and solid hydrocarbons beside a small amount of oxygen-containing organic compounds are formed per cubic metre of catalyst space. The composition of the products is similar to that obtained according to Example 1. The energy used for the circulation of the gases amounts to only a fraction of that needed for the compression of the fresh gas.

The amount of product which can be produced by a given amount of catalyst in the unit of time when working with circulating gas is hardly different from that obtainable by treatment of a non-diluted gas mixture under the conditions suitable therefor, though the circulating gas—as shown above—contains only very little carbon monoxide.

Having now particularly described and ascertained the nature of my said invention and in what manner the same is to be performed, I declare that what I claim is:—

1. Improvements in the synthesis of hydrocarbons with more than one carbon atom in the molecule and contingently minor amounts of liquid or solid oxygen-containing derivatives thereof by conversion of carbon monoxide with hydrogen, which comprises returning to the reaction space gases which have already been subjected to the reaction, the volume of the gases returned per unit of time being at least 20 times that of the fresh gas introduced in said unit of time.

2. A process as claimed in claim 1, in which the volume of the gases returned is at least 50 times that of the fresh gas introduced.

3. A process as claimed in claim 1, which comprises returning gases leaving the reaction space after cooling them to adjust the temperature at the entrance of the reaction space, the volume of which gases is between 20 and 500 times that of the fresh gas introduced.

4. A process as claimed in any of claims

1 to 3, in which the volume of the gases returned to the reaction space is between 50 and 200 times that of the fresh gas introduced.

5. A process as claimed in any of claims 1 to 4, in which part of the gases leaving the reaction space is branched off and reaction products are separated therefrom.

6. A process claimed in any of claims 1 to 5, in which the gases issuing from the reaction space are cooled to about the temperature required for temperature regulation prior to the branching off of that part of the gases from which reaction products are separated.

7. In the process claimed in any of claims 1 to 6, cooling the gases to be returned to the reaction space to about the temperature prevailing at the entrance of the reaction space.

8. A process as claimed in any of claims 1 to 7, in which unconverted gaseous constituents remaining after the removal of the reaction products are returned to the reaction space.

9. A process as claimed in claim 8, in which the gaseous constituents remaining after the removal of the reaction products are returned to the reaction space after removal of impurities by washing.

10. In the process as claimed in any of claims 1 to 9, limiting the increase in temperature in the reaction space to at the utmost 50° Centigrade, preferably 40° Centigrade.

11. In the process as claimed in any of claims 1 to 10, limiting the increase in temperature of the reaction gases in the reaction space to at the utmost 5° Centigrade and preferably 2° Centigrade when working with nickel or cobalt catalysts.

12. In the process claimed in any of claims 1 to 10, working in contact with iron catalysts.

13. In the process claimed in any of claims 1 to 12, limiting the increase in temperature of the reaction gases in the reaction space to below 10° Centigrade when working with iron catalysts obtained by decomposition of iron carbonyl followed by a sintering of the obtained flocks or powder.

14 In the process as claimed in any of claims 1 to 13, working with at least 2 cycle systems connected one behind the other, if desired with separation of reaction products therebetween.

15. In the process as claimed in any of claims 1 to 14, working with a rate of flow of the reaction gases which corresponds to a duration of sojourn between 0.1 and 5 seconds in each passage through a reaction space controlled by a given cycle.

16. In the process as claimed in any of claims 1 to 15, working under pressures between 10 and 50 atmospheres.

17. In the process as claimed in any of claims 1 to 16, working at temperatures within the range of 150° to 450° Centigrade, in general between 170° and 400° Centigrade.

18. A process for the production of hydrocarbons with more than one carbon atom in the molecule substantially as described in each of the foregoing Examples.

19. Hydrocarbons with more than one carbon atom in the molecule contingently together with liquid or solid oxygen-containing derivatives thereof when obtained in accordance with any of the preceding claiming clauses.

Dated this 19th day of May, 1939.

J. Y. & G. W. JOHNSON,
47, Lincoln's Inn Fields, London, W.C.2,
Agents.

Leamington Spa: Printed for His Majesty's Stationery Office, by the Courier Press.- 1940

[This Drawing is a reproduction of the Original on a reduced scale.]

Fig. 1

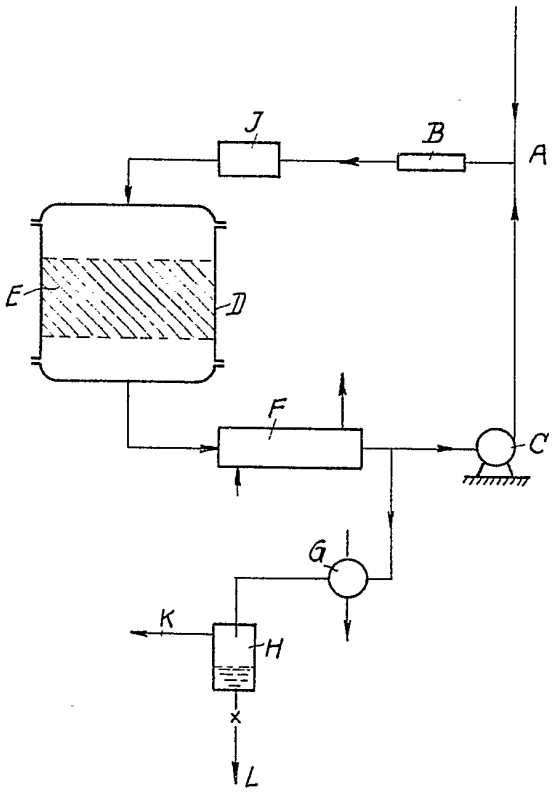

Fig. 2

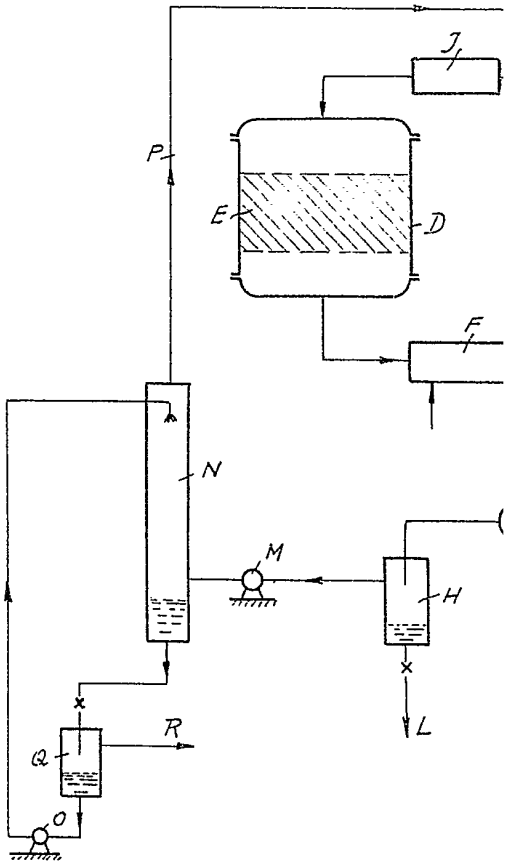

Fig. 2

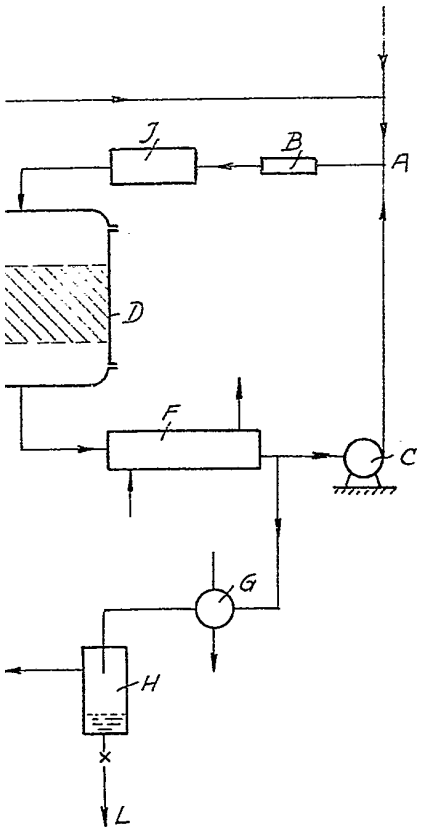

Fig. 3

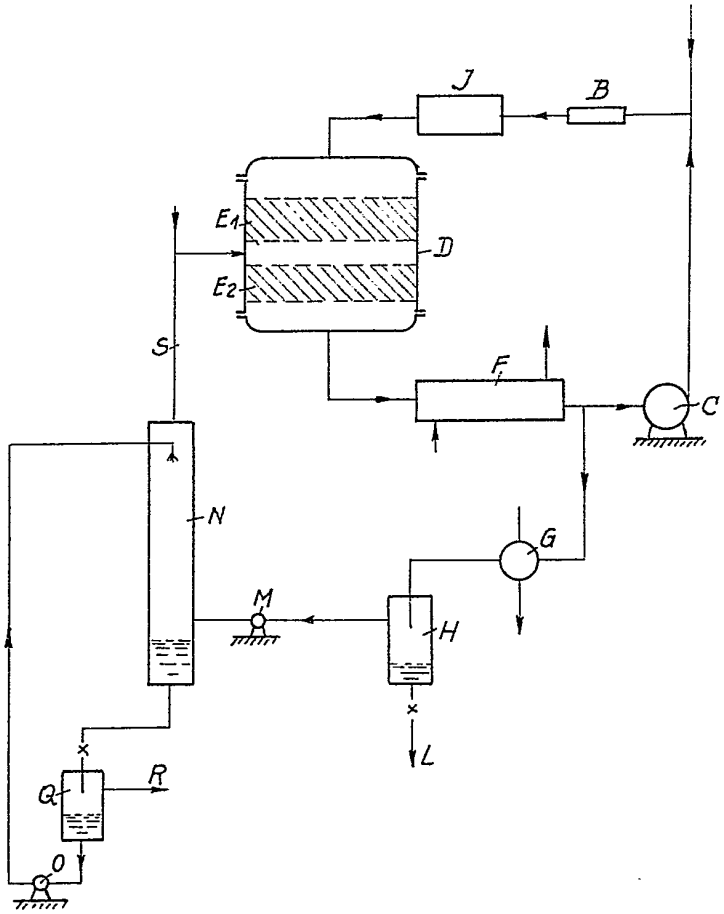

Malby & Sons, Photo-Litho.

Fig. 1

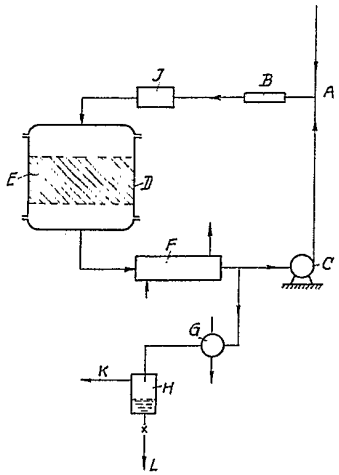

Fig. 2

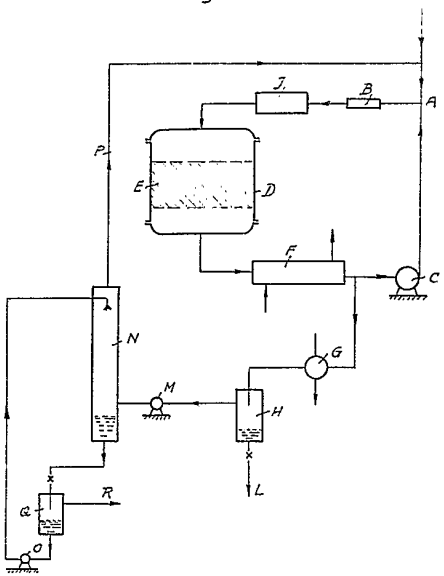

Fig. 3

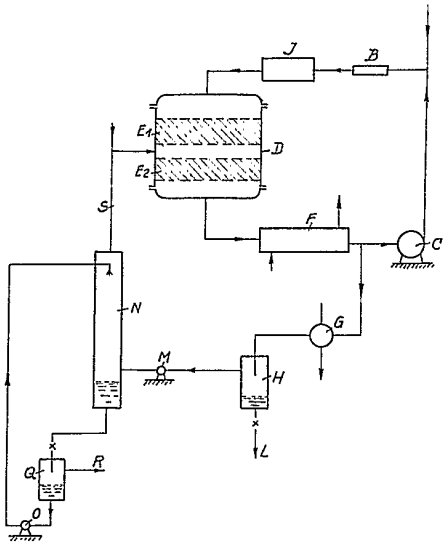

[This Drawing is a reproduction of the Original on a reduced scale.]

Malby & Sons, Photo-Litho