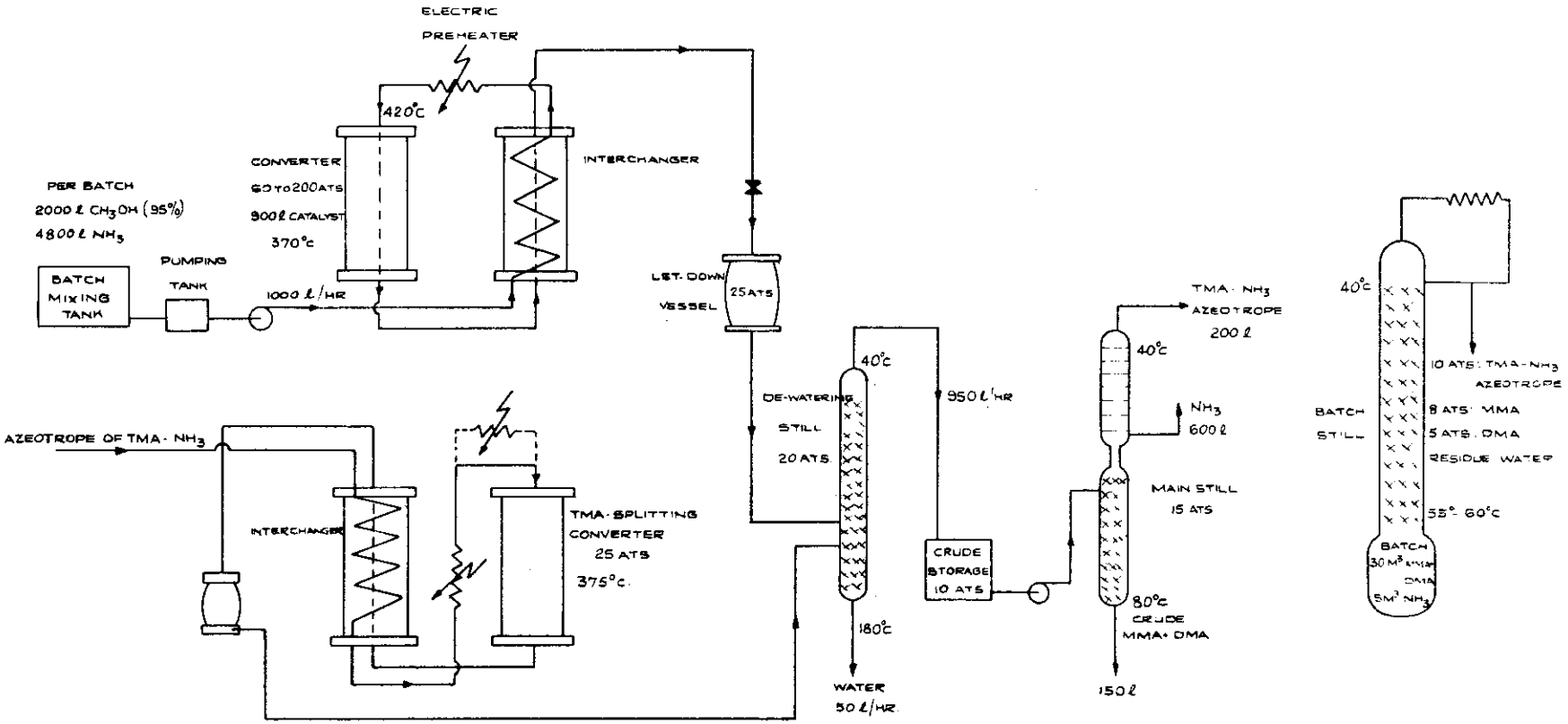

FIG XXXVII METHYLAMINE MANUFACTURE