RESTRICTED
DECLASSIFIED

INDEX NO. S-01-5

SHIP AND RELATED TARGETS

CHARACTERISTICS OF JAPANESE NAVAL VESSELS

ARTICLE 5

SHIPBOARD ELECTRICAL EQUIPMENT

U.S. NAVAL TECHNICAL MISSION TO JAPAN

QC/a9

NS/lnb

U. S. NAVAL TECHNICAL MISSION TO JAPAN
CARE OF FLEET POST OFFICE
SAN FRANCISCO, CALIFORNIA

1 February 1946

RESTRICTED

From: Chief, Naval Technical Mission to Japan.
To : Chief of Naval Operations.

Subject: Target Report - Characteristics of Japanese Naval Vessels, Article 5 - Shipboard Electrical Equipment.

Reference: (a)"Intelligence Targets Japan" (DNI) of 4 Sept. 1945.

1. Subject report, dealing with Targets S-01, S-05, S-40, S-44 through S-47, S-49 through S-58, S-60 through S-69, and S-86(N) through S-90(N) of Fascicle S-1 of reference (a), is submitted herewith.

2. The investigation of the targets and the target report were accomplished by Capt. J. W. Hammond, USNR, assisted by Lt.(jg) E. W. Rosston, USNR; Lt.(jg) P. S. Myers, USNR; Lt.(jg) O. L. George, USNR; Ens. M. D. Mulholland, USNR; and the following U.S. Naval Technicians: L. M. Flaherty, S. W. Cochran, J. W. Simpson, J. R. Cole and F. W. Nickerson.

C. G. GRIMES
Captain, USN

CHARACTERISTICS OF JAPANESE NAVAL VESSELS

ARTICLE 5

SHIPBOARD ELECTRICAL EQUIPMENT

"INTELLIGENCE TARGETS JAPAN" (DNI) OF 4 SEPT. 1945

FASCICLE S-1, TARGETS S-01, S-05, S-40, S-44 TO S-47, S-49 TO S-58, S-60 TO S-69 AND S-86(N) TO S-90(N)

FEBRUARY 1946

U.S. NAVAL TECHNICAL MISSION TO JAPAN

SUMMARY

SHIP AND RELATED TARGETS

CHARACTERISTICS OF JAPANESE NAVAL VESSELS
ARTICLE 5 - JAPANESE SHIPBOARD ELECTRICAL EQUIPMENT

The electrical installations in Japanese naval vessels are neither extensive nor well planned; the equipment is inadequate in performance and obsolete in design. This handicapped the vessels, increased the strain on personnel, made damage control difficult, and multiplied the problems of operation and control when damage occurred. In this respect the electrical design deficiencies contributed to the loss of vessels which otherwise might have been saved.

Power equipment (generators, motors and switch gear) is copied from European or American designs five to ten years old. Only the most obvious precautions are taken to protect and limit the effects of casualties or damage to the equipment. Protective devices are elementary. Selective tripping of circuit breakers and fuses is not practiced or attempted. Protection against damage and mal-operation from shock was not thorough or complete and in several cases loss of all electrical power due to near misses was the result. Water and moisture protection of equipment, wiring devices, fixtures and cables either was not attempted or was not thorough or complete.

Lighting throughout the ships is inadequate, and, except in compartments provided with ports, the officers and crew lived and worked in a perpetual and depressing gloom.

Interior communication equipment is a hodge-podge of "too little and too much", which again demonstrates a lack of intelligent planning. Voice communications, both telephone and announcing, are meager to the extent that each general announcement must be followed by runners who pass through the ship repeating the order. There is an abundance of telegraph systems: engine order telegraphs, damage control telegraph, steering telegraphs, oil pressure telegraph, and oil burner telegraph. This equipment is either unnecessary or distributed in so much duplication or so widely that confusion in orders can and must result.

The greatest deficiency in Japanese combatant vessels is the lack of modern automatic fire control equipment and radar. The lack of these two placed a heavy handicap on Japanese vessels.

The Japanese fire control system is entirely optical for obtaining ranges and bearings, and transmission to the guns and turrets is by a follow-the-pointer system or by telephone. There is no automatic control of guns from either director or plot in train or elevation.

A fire control radar for practical installation on board ship had not been developed or obtained from the Germans. Search radar was in use on all combatant vessels but was about equivalent to British or U. S. search radar developed prior to 1940.

Japanese equipment for infra-red signalling and detection, and for echo ranging is considered equivalent to the best British and U. S. practice.

Japanese design tended to use steam driven equipment as much as possible: the anchor windlass is steam driven, almost all main engine auxiliaries are driven by small high speed turbines, and turbo-generator auxiliaries are largely shaft driven. The rudder, turrets, elevators in aircraft carriers, and ventilating fans are electrically operated.

The capacity of the ship's service power and plant in Japanese vessels is approximately 25% of that installed in the same class vessel in the U. S. Navy. This plant is divided into four to eight units, three-quarters of which are turbo driven and the remainder are diesel driven. The units are generally spread throughout the ship, behind armor, and are separated by watertight bulkheads. The earlier destroyer classes do not have segregated power plants; all the capacity is concentrated in one compartment.

The power system on major combatant vessels (cruisers and upward) is 220 volts D.C. with a ring main distribution system. The exceptions are the cruiser OYODO which had a 450 volt, 3 phase, A.C. ring main installation and the carrier TAIHO which had a 450 volt, 3 phase, A.C. in-line switchboard installation. Destroyers, since 1935, have been designed with a 220 volt, 3 phase, A.C. power system and an in-line switchboard distribution system. The D.C. ring main installation, copied from British practice, is difficult to maintain and vulnerable to damage. The A.C. in-line switchboard installation closely duplicates U. S. practice. Japanese Navy engineers are convinced that the moderate voltage, 3 phase, A.C. ship's service power plant with an in-line switchboard distribution system is best for combatant vessels for the following reasons:

1. Lower maintenance requirements
2. Lighter weight
3. Less vulnerable to damage
4. Commercial equipment is more readily available

Interior communication equipment is almost entirely copied from obsolete foreign design. The original intention allegedly was to install a simple I.C. system. This was not done and due to poor planning and design, there are insufficient telephone and announcing circuits while I.C. equipment of other types are more than sufficient.

Japanese vessels are equipped with less than one-half the telephones carried by similar U. S. vessels. Most of these telephones are on cumbersome and vulnerable exchange circuits. Announcing and teletalk circuits provided on Japanese vessels are less than one-quarter those provided on U. S. vessels of the same type. This voice communication is not sufficient and must be supplemented by voice tubes and runners.

Telegraph circuits are numerous and in several cases are duplicated throughout the vessel. This unquestionably results in confusing orders. Indicators on many I.C. circuits such as the rudder angle indicator are distributed liberally throughout the vessel and are located in many cases where the indication is neither useful nor necessary.

The interior communication system is not well planned.

The fire control system is elementary. The parameters of the fire control problem, obtained optically at the directors or by ship control instruments, are transmitted to plot or the turrets by selsyn circuits or by telephone. These parameters are set into the computer manually. There are no automatic inputs to the computer. The solution of the fire control problem is transmitted to the turrets from either the director or plot by a follow-the-pointer system. There is no provision for automatic control of turrets in either train or elevation. The Japanese developed only one director which could control automatically. This was used for an anti-aircraft guns only.

A stable platform was maintained manually for the range finder by means of optical viewers trained on the horizon fore and aft and athwartships.

This simple fire control system did not require a fire control switchboard and only the most elementary electrical circuits.

Japanese naval engineers were cognizant of many of the deficiencies of their vessels. Some of this knowledge is, unquestionably, hindsight. However, they seemed unable to correct speedily and thoroughly even those defects which were recognized. The factor which contributed most to their condition was insufficient production facilities. Nevertheless, full advantage was not taken of the production facilities which were available. Ship building in the Japanese Navy was not well organized and planning was incomplete. There seemed to be no authority to formulate opinion and make plans and decisions. Constant and continuous delays in adopting good practice was the result.

The Japanese Navy made little use of the skill, talent, and experience available in commercial companies. Civilian engineers were seldom consulted and never were taken into the confidence of the Navy. There seems to be no doubt that, had the Japanese Navy abandoned its policy of secrecy toward commercial companies and sought to make use of the talent and experience of the engineers in these companies, the equipment for shipboard installation would have been of better quality and would have given improved performance.

TABLE OF CONTENTS

Summary ..... Page 1
List of Enclosures ..... Page 3
List of Illustrations ..... Page 4
References ..... Page 12
Introduction ..... Page 15
The Report
Part I Power Installations and Equipment ..... Page 17
Part II Lighting for Illumination, Signalling, and Navigation . Page 100
Part III Interior Communications ..... Page 114

LIST OF ENCLOSURES

(A) List of Equipment Forwarded to Naval Ordnance Investigation Laboratory, Indianhead, Md. ..... Page 341

(B) List of Documents Forwarded to Washington, D.C. ..... Page 343

LIST OF ILLUSTRATIONS

Figure 1 CV TAIHO - 440 V AC Primary Power Plant ..... Page 22

Figure 2 CL OYODO - Construction Plan of Primary Electric Power Ring Main Circuit ..... Page 23

Figure 3 BB YAMATO - Plan Showing Ring Main Primary Distribution System, Including Control System ..... Page 24

Figure 4 DD HARUTSUKI (TERUTSUKI Class) Primary Power System .... Page 27

Figure 5 CL OYODO - Diagram Showing Ring Main, Feeder Circuit Breakers, and Circuit Breaker Control Points ..... Page 28

Figure 6 CV KATSURAGI - Feeder Supply Box Connected to Ring Main in Ring Main Wiring Tunnel ..... Page 29

Figure 7 CV KATSURAGI - Feeder Circuit Breaker Located in Ring Main Wiring Tunnel ..... Page 29

Figure 8 CV KATSURAGI - Distribution Panel Located in Ring Main Wiring Tunnel ..... Page 30

Figure 9 DE MATSU - Primary Power Distribution System ..... Page 33

Figure 10 DD SHIMOTSUKI (TERUTSUKI Class) Primary Power Distribution System ..... Page 34

Figure 11 CL OYODO - Power Supply to Steering ..... Page 36

Figure 12 DD HARUTSUKI (TERUTSUKI Class) Secondary Power System, 20 V DC and 60 V AC Systems ..... Page 39

Figure 13 CL OYODO - Plan Showing 20 V DC Generator and Distribution Switchboards ..... Page 40

Figure 14 DD HARUTSUKI (TERUTSUKI Class) Secondary Power System 100 V DC ..... Page 43

Figure 15 CL OYODO - Plan Showing Reserve Power 100 V DC Generator and Distribution Switchboard ..... Page 44

Figure 16-18 DE OTAKI - Wireways ..... Pages 49 - 50

Figure 19 CV KATSURAGI - Wireway on Inboard Side of Ring Main Wiring Tunnel Showing Ring Main Cable and 601 Conductor IC Cable ..... Page 50

Figure 20 CV KATSURAGI - Wireways on Outboard Side of Ring Main Wiring Tunnel ..... Page 51

Figure 21 Standard Cable Strap Dimensions ..... Page 52

Figure 22 DE OTAKI - Cable Stuffing Box for Passing a Number of Cables Through a Watertight Bulkhead ..... Page 53

Figure 23 Dimensions for Community Cable Stuffing Boxes ..... Page 55

Figure 24 Standard Dimensions for Bulkhead Stuffing Tubes for Cable ..... Page 57

Figure 25 Standard Dimensions for Deck Stuffing Tubes for Cable ..... Page 58

Figure 26 DE OTAKI - Two Watertight Boxes Side by Side, One with Terminal Tubes for Cable Entrance and One with Cable Stuffing Box ..... Page 59

Figure 27 DE OTAKI - Distribution Box with Stuffing Box for Cable Entrance ..... Page 59

Figure 28 Standard Dimensions of Terminal Tubes for Surface Vessels ..... Page 60

Figure 29 Standard Dimensions for Terminal Tubes for Submarines .. Page 63

Figure 30 Destroyer Generator and Distribution Switchboard ..... Page 66

Figure 31 AC Circuit Breaker Tripping and Time Delay Device ..... Page 71

Figure 32 AC Circuit Breaker Drawout Contacts ..... Page 72

Figure 33 AC Circuit Breaker Withdrawing Mechanism ..... Page 72

Figure 34 Rotary Type Automatic Voltage Regulator Cross Section Diagram ..... Page 73

Figure 35 Rotary Type Automatic Voltage Regulator and External Connections ..... Page 74

Figure 36 DC Reverse Current Relay ..... Page 77

Figure 37 Vibration-Shockproof DC Overload Relay ..... Page 78

Figure 38 DC Motor Starter, 60 A ..... Page 81

Figure 39 DC Motor Switch, 60 A ..... Page 82

Figure 40 AC Linestarter, 60 A ..... Page 83

Figure 41 AC Generator Decrement Curves, No Load, with Regulator ..... Page 84

Figure 42 AC Generator Decrement Curves, No Load, Without Regulator ..... Page 85

Figure 43 AC Generator Decrement Curves, Full Load, Without Regulator ..... Page 86

Figure 44 Shock Testing Machine ..... Page 89

Figure 45 CL SAKAWA - Main Control Switchboard - Front View ..... Page 90

Figure 46 CV KATSURAGI - Main Engine Control Room ..... Pages 92 - 93

Figure 47 CV KATSURAGI - Battery Charging Switchboard, Front View ..... Page 93

Figure 48 DE OTAKI - Ships Service Switchboard, Front, Rear, and Forward Views ..... Page 94

Figure 49 SS HA 205 - Control Board, Front View ..... Page 95

Figure 50-51 CV KATSURAGI - Distribution Panel, Fused ..... Page 96

Figure 52 CV KATSURAGI - IC Room Battery Charging Panel and IC Board ..... Page 97

Figure 53-54 DE OTAKI - Controller for Searchlight Motor-Generator ..... Page 98

Figure 55a CV KATSURAGI - Switches for Rocket Firing Current ..... Page 99

Figure 55b CV KATSURAGI - Electric Panel for Control of Rocket Firing ..... Page 99

Figure 56 DD HATSUKAZE - Normal Lighting, Wiring Diagram ..... Page 101

Figure 57 DD HATSUKAZE - Working Lighting, Boiler and Engine Room, Wiring Diagram ..... Page 102

Figure 58 DD HATSUKAZE - Alarm Lighting, Wiring Diagram ..... Page 103

Figure 59 DD HATSUKAZE - Emergency Lighting, Wiring Diagram ..... Page 104

Figure 60 DD HATSUKAZE - Lighting Distribution System, Wiring Diagram ..... Page 105

Figure 61 DD SHIMOTSUKI - Arrangement of Navigation and Signal Lights ..... Page 106

Figure 62 DD ONAMI - Arrangement of Navigation and Signal Lights Page 107

Figure 63 Typical Lighting Distribution for Vessel with Ring Main ..... Page 111

Figure 64 Typical Lighting Distribution for Vessel Equipped with In-Line Switchboard ..... Page 112

Figure 65 Assembly, Fluorescent Lighting Fixture ..... Page 113

Figure 66 Starting Equipment, Fluorescent Lighting Fixture ..... Page 113

Figure 67 CV KATSURAGI - Open Bridge and AA Control Station ..... Page 132

Figure 68 CV KATSURAGI - Control Bridge ..... Page 137

Figure 69 CV KATSURAGI - Steering Bridge ..... Page 141

Figure 70 CV KATSURAGI - Steering Engine Room ..... Page 143

Figure 71 CV KATSURAGI - Engine Control Station ..... Page 144

Figure 72 DD HANAZUKI - Bridge ..... Page 145

Figure 73 DD HANAZUKI - Gyro Room ..... Page 149

Figure 74 DD HANAZUKI - Main Engine Control and Throttle Station ..... Page 152

Figure 75 BB NAGATO - Interior Communication Room and Switchboard ..... Page 157
Figure 76 CV KATSURAGI - Telephone Switchboard ..... Page 162
Figure 77 Block Diagram of Type 5A Announcing System ..... Page 165
Figure 78 Frequency Characteristic of Microphone for Battle Announcing System ..... Page 168
Figure 79 Announcing System Control Box ..... Page 169
Figure 80 Amplifier Assembly - Type 5A Announcing System ..... Page 170
Figure 81 Schematic Diagram - Type 5A Amplifier ..... Page 171
Figure 82 Frequency Response - Type 5A Amplifier ..... Page 174
Figure 83 Load Curve - Typical Announcing Amplifier ..... Page 175
Figure 84 Magnetic Reproducer (Large) ..... Page 176
Figure 85 - 86 Magnetic Reproducer (Small) ..... Pages 176 - 177
Figure 87 Magnetic Reproducer - Junction Box Open ..... Page 177
Figure 88 Frequency Response - Magnetic Reproducer (Model 2 Modification 1) ..... Page 178
Figure 89 Sensitivity Curve - Magnetic Reproducer ..... Page 179
Figure 90 Impedance Characteristic - Magnetic Reproducer ..... Page 180
Figure 91 Mechanism for Magnetic Reproducers ..... Page 181
Figure 92 - 94 Permanent Magnet, Dynamic Reproducer ..... Pages 182 - 183
Figure 95 Frequency Response - Permanent Magnet, Dynamic Reproducer (Type 3) ..... Page 183
Figure 96 Sensitivity Curve - Permanent Magnet, Dynamic Reproducer (Type 3) ..... Page 184
Figure 97 Impedance Curve - Permanent Magnet, Dynamic Reproducer (Type 3) ..... Page 185
Figure 98 Permanent Magnet, Folded Horn (Type 4) - Assembly ..... Page 186
Figure 99 Permanent Magnet, Folded Horn (Type 4) Mechanism Details ..... Page 187
Figure 100 Frequency Response - Permanent Magnet, Folded Horn (Type 4) ..... Page 188
Figure 101 Sensitivity Curve - Permanent Magnet, Folded Horn (Type 4) ..... Page 191
Figure 102 Impedance Curve - Permanent Magnet, Folded Horn (Type 4) ..... Page 191
Figure 103 Block Diagram - Flight Deck Announcing System ..... Page 193

Figure 104 Control Box for Flight Deck - Hangar Deck System ..... Page 194
Figure 105 Amplifier Assembly - Flight Deck Announcing System ..... Page 195
Figure 106 Schematic Diagram - Flight Deck Amplifier ..... Page 197
Figure 107 Bull Horn (Special 2) Assembly ..... Page 198
Figure 108 Blast Valve for Bull Horn (Special 2) Assembly ..... Page 199
Figure 109 Frequency Response - Bull Horn (Special 2) ..... Page 200
Figure 110 Frequency Response - Bull Horn (Special 1) ..... Page 201
Figure 111 Impedance Curve - Bull Horn (Special 2) ..... Page 202
Figure 112 Impedance Curve - Bull Horn (Special 1) ..... Page 202
Figure 113 Sensitivity Curve - Bull Horns (Specials 1 and 2) ..... Page 203
Figure 114 Circuit Diagram - 16 Station Teletalk System ..... Page 205
Figure 115 Circuit Diagram - 10 Station Teletalk System ..... Page 206
Figure 116 Circuit Diagram - 10 Station Teletalk System (1 Selector Switch Box) ..... Page 207
Figure 117 Speaker-Microphone - Weatherdeck Type ..... Page 209
Figure 118 Selector Switch Box - Teletalk System ..... Page 209
Figure 119 Schematic Diagram - Teletalk System Amplifier ..... Page 210
Figure 120 Carbon Microphone - Assembly ..... Page 212
Figure 121 Amplifier - Type A Equipment - Assembly ..... Page 213
Figure 122 Rectifier - Type A Equipment - Assembly ..... Page 214
Figure 123 Schematic Diagram - Type A Equipment ..... Page 215
Figure 124 Amplifier - Type B Equipment - Assembly ..... Page 216
Figure 125 Frequency Response Curve - Portable Carbon Microphone .. Page 217
Figure 126 Frequency Response Curve - Lapel Carbon Microphone ..... Page 218
Figure 127 Load Curve - Type A Amplifier ..... Page 219
Figure 128 Schematic Diagram - Type B Equipment ..... Page 220
Figure 129 - 134 Shock Test Machine ..... Pages 224 - 227
Figure 135 Sound Powered Telephone - Test Setup ..... Page 228
Figure 136 Details of Artificial Mouth and Coupling Chamber ..... Page 229
Figure 137 Detail of Standard Microphone - Diaphragm ..... Page 229
Figure 138 Sound Powered Microphone - Test Setup ..... Page 230
Figure 139 Frequency Response Curves - Sound Powered Transmitter and Receiver ..... Page 231

Figure 140 Sound Powered Unit - Diaphragm Cover Removed ..... Page 234
Figure 141 Sound Powered Receiver ..... Page 234
Figure 142 Sound Powered Breast Transmitter and Head Phones ..... Page 235
Figure 143 Ear Cap Sections and Clamping Ring ..... Page 235
Figure 144-145 Molded Rubber Handset ..... Page 236
Figure 146 Battery Telephone Handsets and Special Exchange Switch Box ..... Page 237
Figure 147 Battery Telephone Breast Transmitters and Head Phones .. Page 237
Figure 148 Wind Direction Transmitter - Assembly ..... Page 239
Figure 149 Wind Direction and Wind Intensity Indicator Junction Box - Assembly ..... Page 240
Figure 150 Wind Direction Indicator - Assembly ..... Page 241
Figure 151 Schematic Diagram - Wind Direction and Intensity System ..... Page 242
Figure 152 Wind Intensity Transmitter - Assembly ..... Page 243
Figure 153 Wind Intensity Indicator - Assembly ..... Page 245
Figure 154 Salinity and Temperature Compensation Circuit (Elementary Diagram) ..... Page 246
Figure 155 Salinity Indicator Circuit - Simplified Schematic ..... Page 246
Figure 156 Salinity Indicator Circuit Schematic, Yokogawa Electric Company ..... Page 247
Figure 157 Salinity Indicator Circuit Schematic, Hokushin Electric Company ..... Page 249
Figure 158 Type 98 Log - All Items ..... Page 252
Figure 159 Type 98 Log - Operation Diagram Speed System ..... Page 253
Figure 160 Type 98 Log - Operation Diagram Follow-up and Distance System ..... Page 253
Figure 161 Type 98 Log - Block Diagram ..... Page 255
Figure 162-163 Type 98 Log - Power Switch and Fuze Box ..... Page 256
Figure 164-165 Type 98 Log - Pressure Receiver ..... Page 257
Figure 166 Type 98 Log - Pressure Receiver Diagram ..... Page 258
Figure 167 Type 98 Log - Compensation Diagram ..... Page 258
Figure 168-169 Type 98 Log - Speed and Distance Transmitter ..... Page 260
Figure 170-171 Type 98 Log - Speed and Distance Indicator Distribution Boxes ..... Page 262
Figure 172-173 Type 98 Log - Condenser Box and Distance Indicator ..... Page 263

Figure 174 - 175 Type 98 Log - Resistance Box ..... Page 264

Figure 176 - 177 Type 98 Log - Speed and Distance Indicator ..... Page 265

Figure 178 Type 98 Log - Pitot Tube ..... Page 267

Figure 179 Type 98 Log - Calibration Curves ..... Page 267

Figure 180 Type 98 Log - Circuit Diagram ..... Page 269

Figure 181 - 182 Type 92 Log - Circuit Diagram ..... Pages 270 - 271

Figure 183 Type 92 Log - Impulse Motor - Schematic Diagram ..... Page 273

Figure 184 Type 92 Log - Drive Gear System ..... Page 274

Figure 185 Type 92 Log - Correction Curves ..... Page 276

Figure 186 - 187 Type 92 Log - Switch Box and Impeller Cable ..... Page 277

Figure 188 - 189 Type 92 Log - M.G. Starter and Branch Compensator Boxes ..... Page 278

Figure 190 - 192 Type 92 Log - Amplifier ..... Pages 279 - 280

Figure 193 - 195 Type 92 Log - Speed and Distance Transmitter ..... Pages 281 & 283

Figure 196 - 197 Type 92 Log - Condenser and Junction Boxes ..... Page 284

Figure 198 - 200 Type 92 Log - Polarized Relay Box ..... Pages 285 - 286

Figure 201 - 202 Type 92 Log - Speed and Distance Indicators ..... Page 287

Figure 203 Type 92 Log - Distance Indicator Assembly ..... Page 288

Figure 204 Type 92 Log - Motor Generator ..... Page 289

Figure 205 - 206 Type 92 Log - Distance Indicator ..... Pages 291 - 292

Figure 207 - 209 Type 92 Log - Speed Indicator ..... Pages 293 - 295

Figure 210 - 211 Type 92 Log - Impeller Tube ..... Pages 296 - 297

Figure 212 Type 92 Log - Seacock ..... Page 298

Figure 213 Type 92 Log - All Items ..... Page 299

Figure 214 Rudder Angle Indicator - Receiver Dial ..... Page 300

Figure 215 Selsyn Motor Transmitter - Assembly ..... Page 301

Figure 216 Selsyn Motor Receiver - Assembly ..... Page 302

Figure 217 Schematic Typical Selsyn Telegraph System ..... Page 304

Figure 218 Propeller Shaft RPM System - Circuit Diagram ..... Page 305

Figure 219 Propeller Shaft RPM System - Voltage Type Speed Transmitter ..... Page 306

Figure 220 Propeller Shaft RPM System - Receiver Junction Box ..... Page 307

Figure 221 Propeller Shaft RPM System - Voltage Receiver Type (Non-Illuminated) ..... Page 308

Figure 222 Propeller Shaft RPM System - Voltage Receiver Type (Illuminated) ..... Page 309

Figure 223 Propeller Shaft RPM System - Receiver Dial ..... Page 310

Figure 224 Sperry Type Gyro Compass ..... Page 312

Figure 225 Sperry Type Compass - Circuit Wiring Diagram ..... Page 313

Figure 226 Sperry Type Compass - Ring Damping Brake ..... Page 314

Figure 227 Sperry Type Compass - Binnacle and Stand ..... Page 315

Figure 228 Sperry Type Compass - Gyro Box ..... Page 316

Figure 229 Sperry Type Compass - Vertical Ring ..... Page 317

Figure 230-231 Sperry Type Compass - Mercury Stabilizer ... Pages 318-319

Figure 232 Sperry Type Compass - Tracking Ring ..... Page 320

Figure 233 Sperry Type Compass - Main Switchboard ..... Page 321

Figure 234 Sperry Type Compass - Repeater Switchboard ..... Page 322

Figure 235 Anschutz Type Compass - Circuit Diagram ..... Page 323

Figure 236 Anschutz Type Compass - Repeater Dial ..... Page 324

Figure 237 Anschutz Type Compass - Repeater Assembly ..... Page 325

Figure 238-239 Anschutz Type Compass - Master Compass Assembly ..... Pages 326-327

Figure 240 Anschutz Type Compass - Master Compass Rotor Assembly ..... Page 328

Figure 241 Anschutz Type Compass - Amplifier ..... Page 329

Figure 242 Anschutz Type Compass - Power Junction Box ..... Page 330

Figure 243 Anschutz Type Compass - Oscillation Control Switch .... Page 331

Figure 244 Portable and Semi-Portable Motion Picture Equipment ... Page 333

Figure 245 Semi-Portable Motion Picture Equipment ..... Page 338

REFERENCES

Location of Targets:

Third Division, Naval Technical Department, Navy Ministry, TOKYO

Navy Yards:

YOKOSUKA
KURE
SASEBO

Ships:

DE OTAKI, 1600 ton
SS Ha-205, 350 ton
CV KATSURAGI, 27,000 ton
DD HARUTSUKI
DD HANAZUKI
SS I-203
DE KEYAKI
CL SAKAWA
DD YUKIKAZE
CV JUNYO

Companies:

Shibaura Electric Co. Ltd., TOKYO
Mitsubishi Electric Co. Ltd., KOBE
Nisshin Electric Co. Ltd., KYOTO
Kawasaki Shipyard, KOBE
Nippon Electric Co. Ltd., KAWASAKI
Konishi Co. Ltd., TOKYO
Oki Electric Co., TOKYO

Japanese Personnel Interviewed:

Vice Adm. SENO	Commandant, Kure Naval Base
Capt. MATSUI	Chief of Section 3, Third Division, Technical Dept.
Comdr. ABE	Section 3, Third Division, Technical Dept.
Lt. Comdr. NAKAMUTO	Section 3, Third Division, Technical Dept.
Lieut. SATO	Section 3, Third Division, Technical Dept. (Submarine Design)
Comdr. ITO	Section 3, Third Division, Technical Dept.
Lt. Comdr. AIHARA	Section 3, Third Division, Technical Dept.
Lt. Comdr. MASAKI	Section 3, Third Division, Technical Dept.
Capt. KAWAGUCHI	Technical Dept.
Lt. Comdr. TAGAKI	Technical Dept.
Lt. Comdr. MATANO	Technical Dept.
Capt. HIDAKA	Chief of Electrical Section, Kure Navy Yard (After 1 Dec. 1945)
Mr. MIYAZAKI	Naval Technician, Electrical Section, Kure Navy Yard
Mr. ONO	Naval Technician, Electrical Section, Kure Navy Yard
Mr. OZAKI	Naval Technician, Eleetrical Section, Kure Navy Yard
Mr. SADASUE	Naval Technician, Electrical Section, Kure Navy Yard

Mr. NAKAMOTO	Naval Technician, Electrical Section, Kure Navy Yard
Adm. NAKAMURA	Chief of Electrical Section, Kure Navy Yard (Until 1 Dec. 1945)
Lt. Comdr. KAWASAKI	Electrical Section, Kure Navy Yard
Lt. Comdr. KANAZAWA	Electrical Section, Kure Navy Yard
Mr. YOSHIDA	Naval Technician, Electrical Section, Kure Navy Yard
Ens. MUTO	Capt., Ha-205, 350 ton SS
Ens. OKA	Eng. Officer, HARUTSUKI, DD
W. O. AIKAWA	Electrical Dept., KATSURAGI, 27,000 ton CV
Lieut. ABE	Chief Electrical Division, Maizuru Naval Base
Mr. OGASAWARA	Engineer, Furukawa Electric Co. Ltd., YOKOHAMA
Mr. KOMAZAWA	Engineer, Furukawa Electric Co. Ltd., YOKOHAMA
Mr. TANAKA	Chief Tester, Shibaura Electric Co. Ltd.
Mr. FWIWARA	Ass't Mgr. Fuchu Plant, Shibaura Electric Co. Ltd.
Mr. TODA	Chief of Design, Shibaura Electric Co. Ltd.
Mr. SUZUKI	Circuit Breaker and Control Eng. Mgr., Shibaura Electric Co. Ltd.
Mr. SAITO	Chief of Administration, Shibaura Electric Co. Ltd.
Mr. TAKANISHI	Induction Motor Design Engineer, Shibaura Electric Co. Ltd.
Mr. SANO	A.C. Generator Design Engineer, Shibaura Electric Co. Ltd.
Mr. ASAKAWA	Transformer Design Eng. Shibaura Electric Co. Ltd.
Mr. SAITO	Circuit Breaker Design Engineer, Shibaura Electric Co. Ltd.
Mr. OKADA	Engineer, Tokyo Plant, Shibaura Electric Co. Ltd.
Mr. TANAKA	Engineer, Tokyo Plant, Shibaura Electric Co. Ltd.
Mr. KAKIDA	Ass't Mgr. Kobe Plant, Mitsubishi Electric Co. Ltd.
Mr. OGAWA	Chief of Design, Kobe Plant, Mitsubishi Electric Co. Ltd.
Mr. MUNEMURA	Switch Gear and Control Eng. Mgr., Kobe Plant, Mitsubishi Electric Co. Ltd.
Mr. KAMEI	Chief Draftsman, Kobe Plant, Mitsubishi Electric Co. Ltd.
Mr. HAZAMA	Managing Director, Kobe Plant, Mitsubishi Electric Co. Ltd.
Vice Adm. YOSHICKA	Managing Director, Kawasaki S.B. Co. Ltd., KOBE
Mr. CHURIKI	Chief of General Affairs Dept., Kawasaki S.B. Co. Ltd., KOBE
Mr. TSUBOI	Staff Member, Affairs Dept., Kawasaki S.B. Co. Ltd., KOBE
Mr. MORIMOTO	Chief of Shipbuilding Dept., Kawasaki S.B. Co. Ltd., KOBE
Mr. KAYAMA	Chief of Design Dept., Nisshin Electric Co. Ltd., KYOTO
Mr. OKITA	Chief of Switch Gear Eng., Nisshin Electric Co. Ltd., KYOTO
Mr. GOTO	Design Engineer, Nisshin Electric Co. Ltd., KYOTO
Mr. TOMINAGA	Design Engineer, Nisshin Electric Co. Ltd., KYOTO
Mr. HARA	Nippon Electric Co. Ltd., KAWASAKI
Mr. NAGURA	Nippon Electric Co. Ltd., KAWASAKI
Mr. SHIMADA	Nippon Electric Co. Ltd., KAWASAKI
Mr. SATO	Nippon Electric Co. Ltd., KAWASAKI
Mr. FUKUSHIMA	Nippon Electric Co. Ltd., TOKYO
Mr. NISHISAKA	Nippon Electric Co. Ltd., TOKYO
Mr. SAITO	Kyodo Electric Co. Ltd., TOKYO
Mr. NAITO	Kyodo Electric Co. Ltd., TOKYO
Mr. MATSUZAKI	Hokushin Electric Co. Ltd., TOKYO
Mr. YAMADA	Engineer, Hokushin Electric Co. Ltd., TOKYO
Mr. MAEDA	Engineer, Hokushin Electric Co. Ltd., TOKYO
Mr. ISHIZUKA	Engineer, Hokushin Electric Co. Ltd., TOKYO

Mr. FUJII	Nihon Onkyo Co. Ltd.
Mr. TAKU	Nihon Onkyo Co. Ltd.
Mr. YAJIMA	Nihon Onkyo Co. Ltd.
Mr. SUGIURA	Konishi Co. Ltd., TOKYO
Mr. IKEGAMI	Konishi Co. Ltd., TOKYO
Mr. HOSAKA	Konishi Co. Ltd., TOKYO
Mr. MATSUDA	Konishi Co. Ltd., TOKYO
Mr. KANEKO	Elec. Engineer, Asano Dockyard, YOKOHAMA
Mr. NAKATA	Mgr., Oki Electric Co. Ltd., Tokyo Plant
Mr. SUGIYAMA	Engineer, Oki Electric Co. Ltd., Tokyo Plant
Mr. OKAHARA	Engineer, Oki Electric Co. Ltd., Tokyo Plant
Mr. JIN	Engineer, Yokogawa Electric Works
Mr. NOTOMI	Engineer, Tokyo Keiki Co. Ltd.

INTRODUCTION

This report is a survey of the electrical installations on Japanese combatant vessels. Electrical equipment, methods of installation and connection, and the use and performance of the entire system are reviewed.

The radio, radar, underwater sound and the infra-red signalling and detection installations, and the electrical side of fire control are discussed in other NavTechJap reports.

The most recently designed combatant vessels of the Japanese Navy which are afloat were inspected in company with Japanese Navy operating and design personnel. Japanese designers, civilian and naval, were interrogated. All pertinent plans and documents which were available were confiscated and reviewed.

Every effort has been made to substantiate statements and allegations in this report by photographic or documentary proof.

THE REPORT

Part I
POWER INSTALLATIONS AND EQUIPMENT

A. POWER INSTALLATIONS ON SHIPBOARD

1. General Discussion

This section covers the power installations on destroyer escorts, destroyers, cruisers, aircraft carriers, and battleships. Every effort has been made to give a picture of the power installation on the latest vessels of the type. However, in making this study no specifications comparable to the U. S. Navy General Specifications or Special Specifications have been obtained. All naval activities claimed that all such documents were destroyed at the close of hostilities or burned in the bombing raids. Information was obtained from interrogation of Japanese design personnel and inspection of naval vessels and installations plans for vessels.

The lack of an overall knowledge of the power installation on Japanese naval vessels as indicated by personnel interrogated, serves to confirm the lack of coordination obvious from a study of the power systems. An example of the lack of coordination is the equipment and auxiliaries requiring a multiplicity of operating voltages different from that of the primary plant. Numerous motor generators and transformers for special loads are required.

In a number of respects the power installation and distribution employed on Japanese vessels is five to ten years behind that in U. S. Navy vessels. The reserve power (emergency plant) is entirely battery, a practice which was discontinued by the U. S. Navy more than 10 years ago in favor of diesel generation. Very little consideration is given to shock in the mounting of equipment. Selective tripping of protective devices in the distribution system to isolate a fault with the least possible interruption of power to auxiliaries was realized as a problem, but was treated with indifference and it is doubtful if any degree of selectivity was achieved. Transmission of water longitudinally through cable, thus damaging electrical equipment remote from flooded areas, was also recognized as a problem but was not solved by the Japanese.

When the emergency diesels on U. S. Navy vessels are considered, the specification of the power plants on Japanese vessels was less adequate than the specification on U. S. Navy vessels of comparable size. The Japanese installed both 450 volt A.C. and 225 volt D.C. primary power plants, and used both the ring main and in-line switchboard radial types of distribution in cruisers and aircraft carriers built in the last five years. With this in mind it is interesting to note that vessels under design and building at the close of hostilities were to have been 450 volt A.C. with in-line switchboard radial distribution. This is similar to the installations on U. S. cruisers and aircraft carriers completed in the last 10 years. However, the Japanese practice of having all feeder circuit breakers on these switchboards electrically operated with local control and remote control at a master control is considered to be an unnecessary refinement with its complications in installations and control cable as possible sources of trouble.

2. Primary Power Plant

The following is a discussion of the primary power plant, the capacity of the power plant and its relative location. The Japanese have come to the conclusion that A.C. power is the most suitable for naval vessels of the size of destroyer escorts and larger. The separation between power plants on destroyers is poor. The athwartship separation between the two forward and two after primary power plants on aircraft carriers and cruisers is also considered to be poor, compared to U. S. installations. This is especially true when it is realized that there are no diesel generators installed remote from the primary power plant to supply emergency power On cruisers and aircraft carriers the practice of installing the switchboards in a watertight compartment other than boiler rooms or engine rooms is considered desirable from the viewpoint of possible damage to the switchboards as a result of failure of equipment, including pumps, located in the boiler rooms and engine rooms.

On all Japanese vessels provision is made for paralleling all primary power generators. Therefore, on both A.C. and D.C. vessels all generators are required to operate satisfactorily in parallel. D.C. generators are two-wire, stabilized, shunt compounded and with no equalizer connections. The standard Japanese practice is to design turbo generators for an overload capacity of 25% for one half hour and 50% for two minutes. Diesel generators are designed for an overload capacity of 15% for one half hour and 25% for two minutes. However, there seems to be some question as to the ability of the diesels to actually carry this overload.

a. Type of Voltage

In the last ten years the Japanese have installed 230 volt, three phase, 60 cycle, A.C. power plants on all destroyers and destroyer escorts and either 225 volt D.C. or 450 volt, three phase, 60 cycle, A.C. power plants in cruisers, aircraft carriers, and battleships. However, it will be noted that in the case of JUNYO, a 230 volt A.C. plant was installed. This aircraft carrier had a power plant voltage different from Japanese standard practice because it was converted from a merchant ship.

As early as 1933 the Japanese Navy started the design of 230 volt A.C. installations for destroyers. In 1935 the construction of the first 230 A.C. destroyer (ASASHIO class) was started and all destroyers built or designed since that time have had 230 volt A.C. power plants. The AKASHI, a repair ship built in 1936, was the first 450 volt, three phase, 60 cycle vessel built by the Japanese Navy. After the success of the 450 volt A.C. installation in this vessel, the Japanese Navy decided to incorporate a 450 volt, three phase, 60 cycle power plant in the design of all future cruisers, aircraft carriers, and battleships where practicable.

It will be noted, however, from Table I that a number of recent designs have had 225 volt D.C. installations. This is primarily due to the fact that D.C. equipment of the previously used designs was available.

Therefore, in the decision to go to A.C. power plants the following points, among others, were considered:

(1) On DD's the D.C. electric plant was about 110% as heavy as a 230 volt A.C. electric plant.

(2) On larger vessels the D.C. electrical plant was about 120% as heavy as a 450 volt A.C. electrical plant.

Table I

TABLE SHOWING ELECTRICAL DATA AND SHIPS DATA ON JAPANESE NAVAL VESSELS

Class	Primary Power Plant	Reserve Power Batteries and MG Sets	Power for Selsyn Motors AC	Power for Telephone Motor Generators and Batteries	Search Light Motor Generators
BB YAMATO	DC 225V 4800 kw (T) 600 kw x 4 (D) 600 kw x 4	320 AH - 112 Cells x 3 Banks 320 AH - 112 Cells x 1 Bank *	M-G AC 230V 80 KVA x 4	M-G DC 22V 15 kw x 2 320 AH - 11 Cells x 4 Banks 2 Banks in parallel for each of two batteries	8-19.8 kw at 88V DC
CV TAIHO	AC 450V 3600 KVA** (T) 800 KVA x 3 (D) 600 KVA x 2	320 AH - 53 Cells x 4 Banks 320 AH - 53 Cells x 2 Banks* M-G DC 105V 50 kw x 2	Step down transformers	M-G DC 22V 1 kw x 2 320 AH - 11 Cells x 2 Banks	4-17.6 kw at 88V DC 15.0 kw at 105V DC
CV JUNYO	AC 230V 6395 KVA** (T) 200 KVA x 3 (T) 250 KVA x 1 (D) 145 KVA x 1	320 AH - 112 Cells x 1 Bank M-G DC 225V 3 kw x 1	Do	M-G DC 22V 25 kw x 1 320 AH - 11 Cells x 2 Banks	Do
CV UNRYU	DC 225V 1600 kw (T) 400 kw x 3 (D) 200 kw x 2	320 AH - 112 Cells x 2 Banks 160 AH - 112 Cells x 1 Bank*	Directly connected to Turbo-Generators AC 230V 15 KVA x 3 M-G 230V 50 KVA x 1	M-G DC 22V 3 kw x 2 320 AH - 11 Cells x 2 Banks	4-17.6 kw at 88V DC
CA TONE	DC 225V 1300 kw (T) 300 kw x 3 (D) 200 kw x 2	320 AH - 112 Cells x 1 Bank 160 AH - 112 Cells x 1 Bank*	M-G 25 KVA x 3	Do	Do
CA IBUKI	DC 225V 1300 kw (T) 300 kw x 3 (D) 200 kw x 2	320 AH - 112 Cells x 2 Banks 160 AH - 112 Cells x 1 Bank*	Directly connected to Turbo-Generators AC 230V 15 KVA x 3 M-G 230V 30 KVA x 1	Do	3-17.6 kw at 88V DC
CL AGANO	AC 450V 1740 KVA** (T) 400 KVA x 3 (D) 270 KVA x 2	320 AH - 53 Cells x 2 Banks 320 AH - 53 Cells x 1 Bank* M-G DC 105V 50 kw x 2	Step down transformers	M-G DC 22V 1 kw x 2 320 AH - 11 Cells x 2 Banks	3-17.6 kw at 88V DC 15.0 kw at 105V DC
CL OYODO	AC 450V 1740 KVA** (T) 400 KVA x 3 (D) 270 KVA x 2	Do	Do	Do	Do
DD ASASHIO	AC 230V 245 KVA** (T) 135 KVA x 1 (D) 55 KVA x 2	80 AH - 55 Cells x 1 Bank M-G DC 105V 12 kw x 1	Do	M-G DC 22V 0.5 kw x 1 160 AH - 11 Cells x 1 Bank	1-16.8 kw at 80V DC 15.0 kw at 105V DC
DD KAGERO	AC 230V 290 KVA** (T) 135 KVA x 1 (D) 55 KVA x 2	Do	Do	Do	Do
DD TERUTSUKI	AC 230V 380 KVA** (T) 270 KVA x 1 (D) 55 KVA x 2	Do	Do	M-G DC 22V 1.0 kw x 1 160 AH - 11 Cells x 1 Bank 20 AH - 10 Cells x 1 Bank	Do
DD Late Vessels of TERUTSUKI class	AC 230V 490 KVA** (T) 270 KVA x 1 (D) 110 KVA x 2	Do	Do	Do	Do
MATSU	AC 230V 245 KVA** (T) 135 KVA x 1 (D) 55 KVA x 2	Do	Do	80 AH - 11 Cells x 5 Banks Note: Batteries charged from 100V DC system by resistance type battery charger	Do

* For steering only ** At 75% power factor

Table I (continued)
TABLE SHOWING ELECTRICAL DATA AND SHIPS DATA ON JAPANESE NAVAL VESSELS

Class	Distribution System	Lighting Voltage	Year First of Class Completed	Displacement in Metric Tons	Length in Meters	Beam and Draft in Meters	Type of Propulsion and H.P.	Speed in Knots	Armament
BB YAMATO	Ring Main	220	1941	64,000	235	31.5 9.2	Turbine 150,000	25	3-3 Gun Turrets 46cm 3-3 Gun Turrets 15.5cm 16-2 Gun Turrets 12.7cm 150-25mm Guns
CV TAIHO	In line SWBD Radial	100	1944	30,360	238	27.7 9.6	Turbine 160,000	33	6-2 Gun Turrets 10cm 17-3 Gun Mounts 25mm
CV JUNYO	Do	100	1942	19,000	206	26.7 8.0	Turbine 56,250	23	6-2 Gun Turrets 12.7cm 8-3 Gun Mounts 25cm
CV UNRYU	Ring Main	220	1944	20,100	210	21.0 7.5	Turbine 152,000	30	6-2 Gun Turrets 12.7cm 9-3 Gun Mounts 25mm 2-2 Gun Mounts 25mm 30-25mm Guns
CA TONE	Do	220	1938	8,500	190.5	18.2 4.5	Turbine 152,000	33	3-2 Gun Turrets 20cm 4-2 Gun Turrets 12.7cm 10-3 Gun Mounts 25mm Torpedoes 4 - Triple Mounts
CA IBUKI	Do	220	1943	12,500	187.8	20.0 6.0	Turbine 152,000	35	5-2 Gun Turrets 20cm 4-2 Gun Turrets 12.7cm 4-2 Gun Mounts 25mm 2-2 Gun Mounts 13mm Torpedoes 4 - Quad Mounts
CL AGANO	Do	100	1941	6,500	162.0	15.2 5.6	Turbine 100,000	35	3-2 Gun Turrets 15cm 2-2 Gun Mounts 8cm 2-3 Gun Mounts 25mm Torpedoes 2 - Quad Mounts
CL OYODO	Do	100	1942	8,000	180.0	16.6 5.9	Turbine 110,000	35	3-2 Gun Turrets 15cm 4-2 Gun Turrets 10cm 6-2 Gun Mounts 25mm Torpedoes 2 - Quad Mounts
DD ASASHIO	In line SWBD Radial	100	1935	1,500	180.55	10.15 2.75	Turbine 38,000	34	3-2 Gun Turrets 12.7cm 2-2 Gun Mounts 25mm Torpedoes 2 - Quad Mounts
DD KAGERO	Do	100	1937	2,000	110.96	10.76 3.3	Turbine 43,000	34	Do
DD TERUTSUKI	Do	100	1942	3,450	126	11.6 3.7	Turbine 52,000	32	4-2 Gun Turrets 10cm 4-3 Gun Mounts 25mm Torpedoes 1 - Quad Mount
DD Late Vessels of TERUTSUKI class	Do	100	1944	3,450	126	11.6 3.7	Turbine 52,000	32	Do
MATSU	Do	100	1944	1,260	92.2	9.4 2.87	Turbine 19,000	27	1-2 Gun Turrets 12.7cm 1-1 Gun Turrets 12.7cm 4-3 Gun Mounts 25mm

(3) 90% of the motor trouble on D.C. vessels had been commutator trouble.

(4) A.C. was used commercially; therefore, commercial A.C. equipment could be easily adapted for naval installations.

(5) Better speed control could be obtained from D.C. motors.

(6) Batteries could be used for reserve power with less difficulty on D.C. vessels.

(7) Change to A.C. required the development of a suitable A.C. circuit breaker for naval shipboard use.

b. Power Plant Capacity

Table II, which has been taken from NavTechJap Document Number ND50-1079, indicates the connected load and calculated operating load for each switchboard on the aircraft carrier TAIHO.

Table II
CONNECTED LOAD AND CALCULATED OPERATING LOAD
JAPANESE AIRCRAFT CARRIER TAIHO

Switch Board	Connected Load in KVA	Gen. Out Put in KVA	Battle Load in KVA		Anchor Load in KVA	
			Operating Connected Load	Loads Supplied Jointly	Operating Connected Load	Loads Supplied Jointly
For 1 and 2 Gen.	1,369.19	1,200.00	501.12	193.10	353.61	94.00
For 3 Gen.	1,957.98	800.00	494.26		351.64	
For 4 Gen.	2,424.48	800.00	985.22	605.25	360.11	65.00
For 5 Gen.	2,352.55	800.00	859.10		357.21	
Total	8,104.20	3,600.00	2,839.20	789.35	1,422.17	159.00
Net Battle Load		3,600.00	2,041.40			
Net Anchor Load		1,200.00			1,263.17	

No other load analysis or actual operating load data has been obtained. Captain MATSUI of the Naval Ministry stated that in the design of a vessel the generator capacity is selected on the basis of calculated battle load. Calculated battle load is determined by multiplying the individual connected loads by a factor and taking the sum of the results. Factors used are as follows: 0.3 for lighting, 0.8 for continuous battle loads such as turrets, 0.5 for intermittent battle loads such as fans, blowers and searchlights and 0.0 for non-battle loads.

On cruisers and aircraft carriers the general practice is to divide the power plant essentially into four power plants, three turbine and one diesel plant. The minimum capacity of each turbo plant is selected on the basis of 130% of one-fourth calculated battle load for the entire ship. The diesel plant is made up of two diesel generators. The size of each diesel generator is such that with overload capacity one diesel will carry 14 of the calculated battle

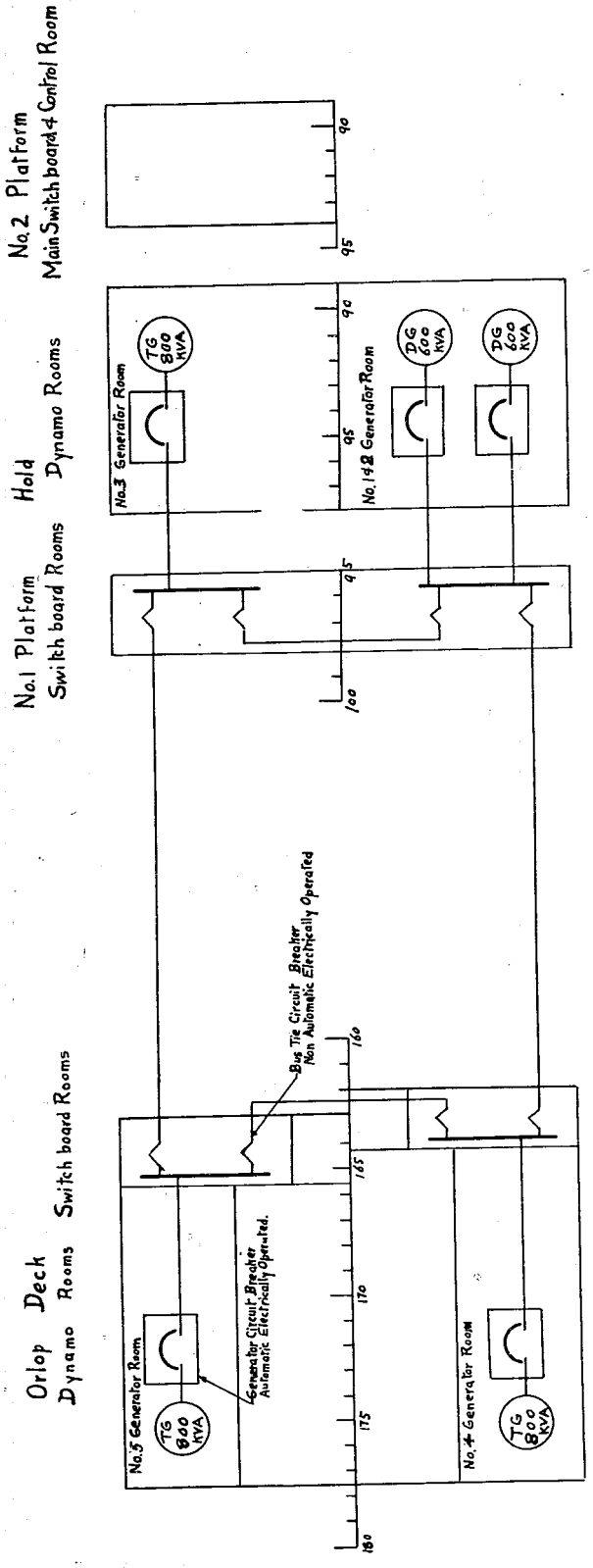

Figure 1
CV TAIHO
440V A.C. Primary Power Plant:
Plan Showing Relative Location
of Switchboards and Generators,
and Bus Tie Arrangement

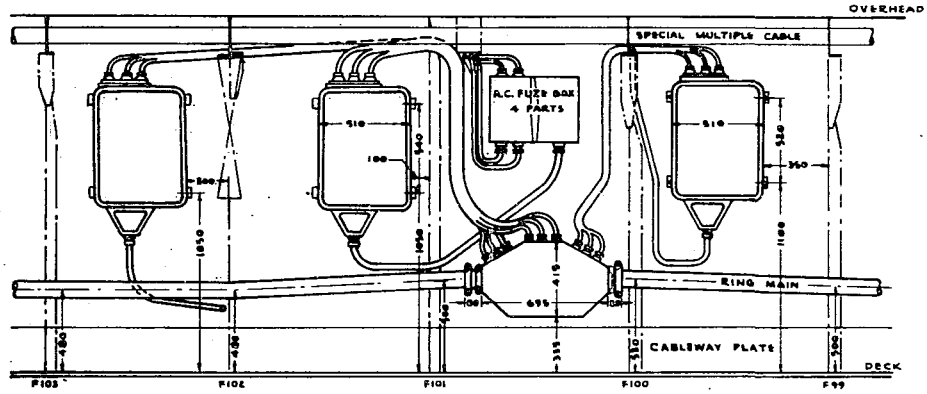

NO. 1 CABLE TUNNEL - FRONT VIEW IN VICINITY OF FR. 101 LOOKING TOWARD CENTER OF HULL

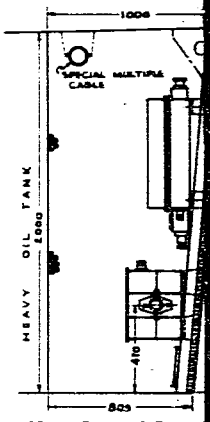

FR. 157 PORT - SECTION L

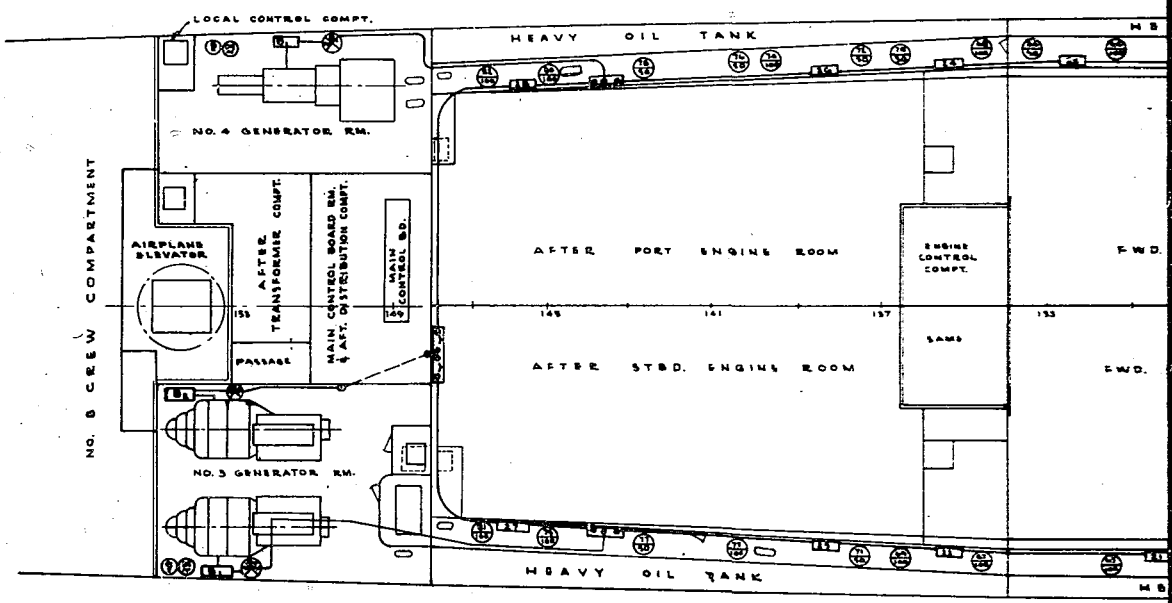

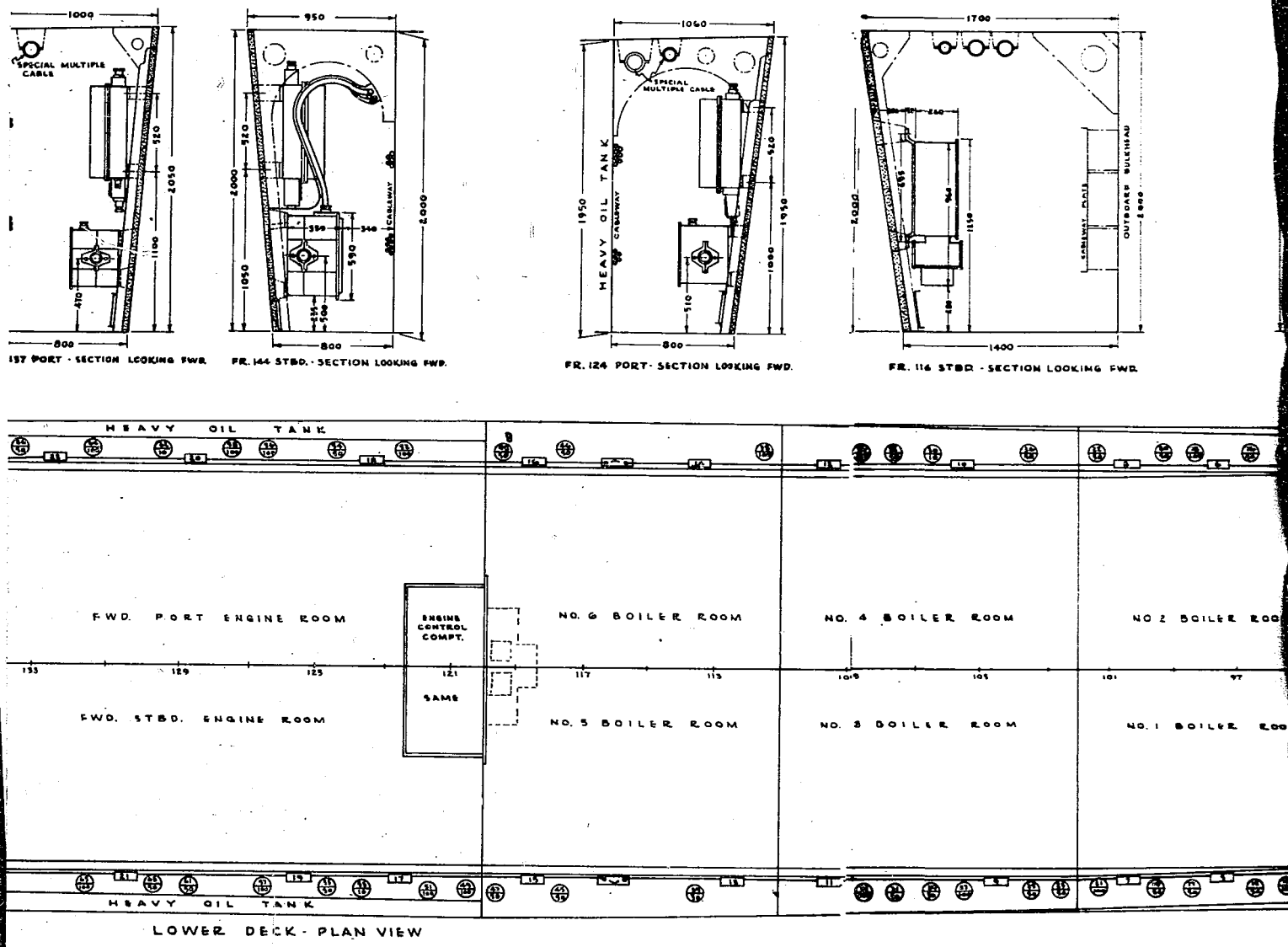

Figure 2
CL OYODO
Construction Plan of Primary
Electric Power Ring Main Circuit

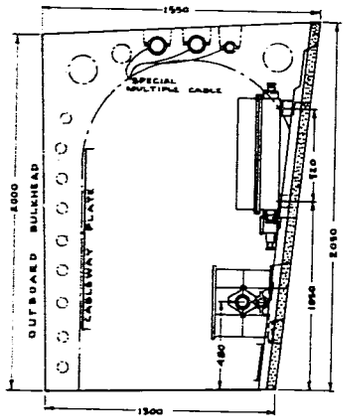

FR. 107 PORT - SECTION LOOKING FWD.

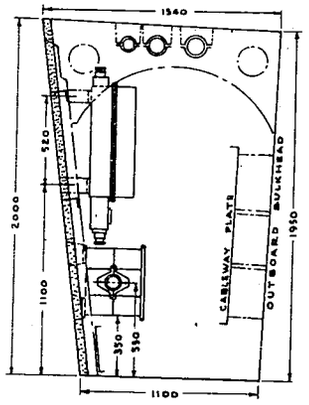

FR. 99 STBD. - SECTION LOOKING FWD.

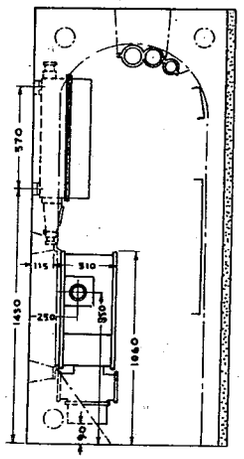

Ⓑ SECTION SEEN FROM DIRECTION OF ARROW

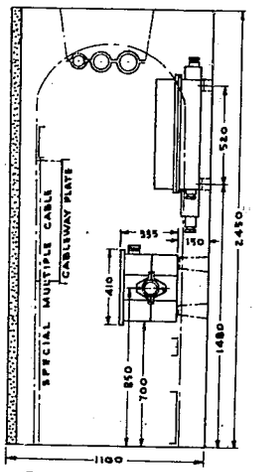

Ⓐ SECTION SEEN FROM DIRECTION OF ARROW

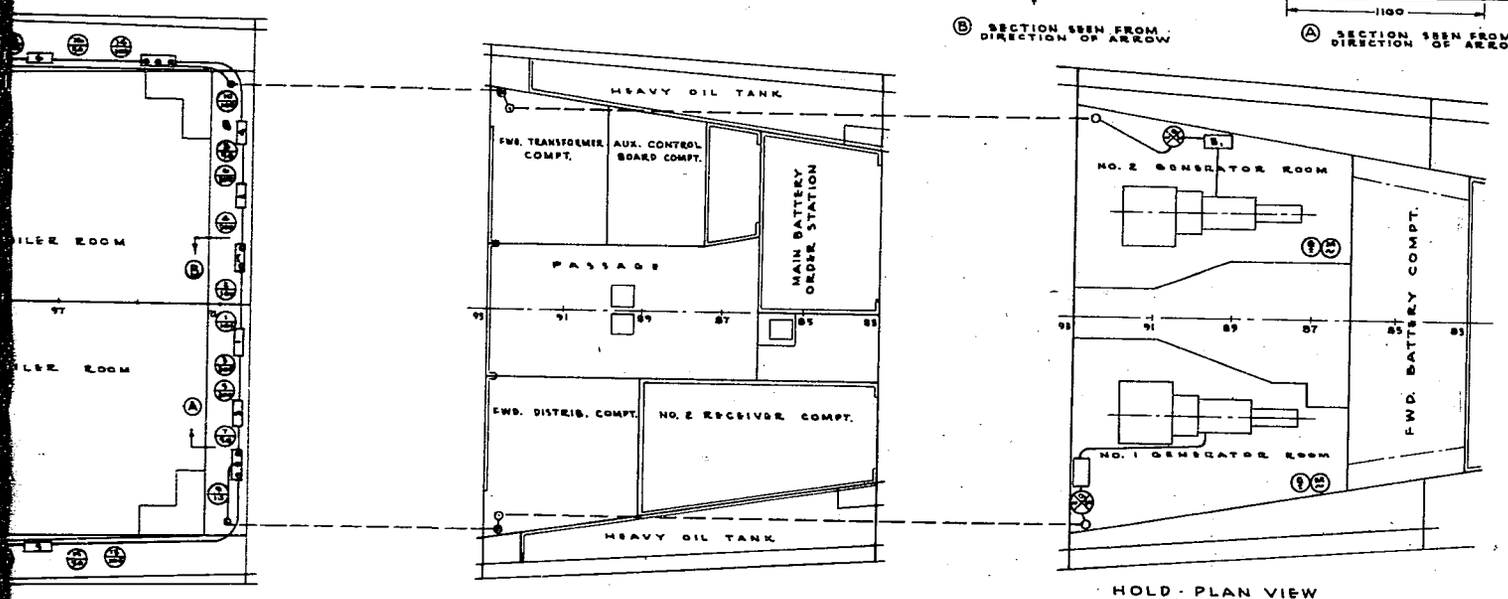

HOLD - PLAN VIEW

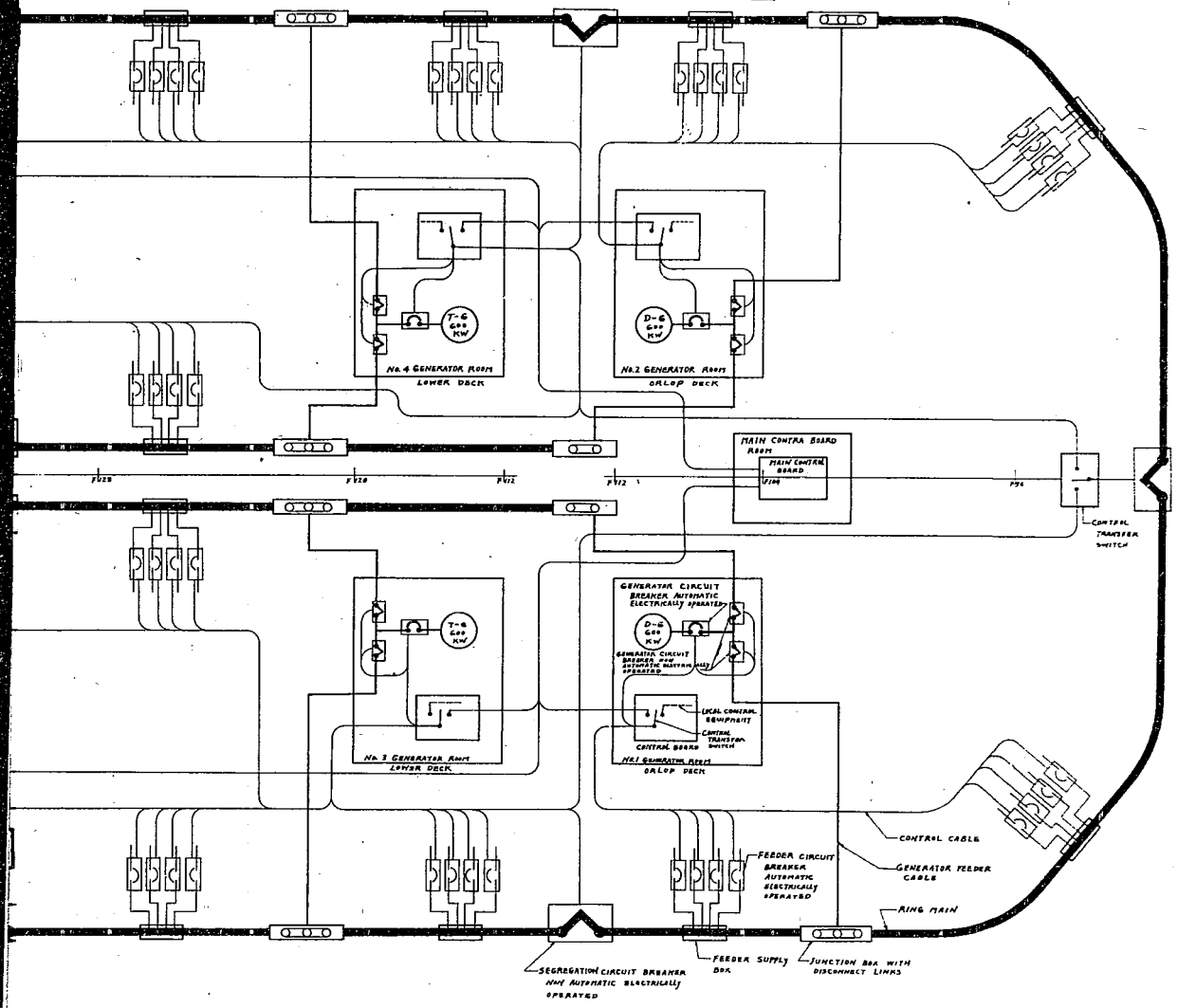

Figure 3
BB YAMATO
h Primary Distribution System,
g Control System

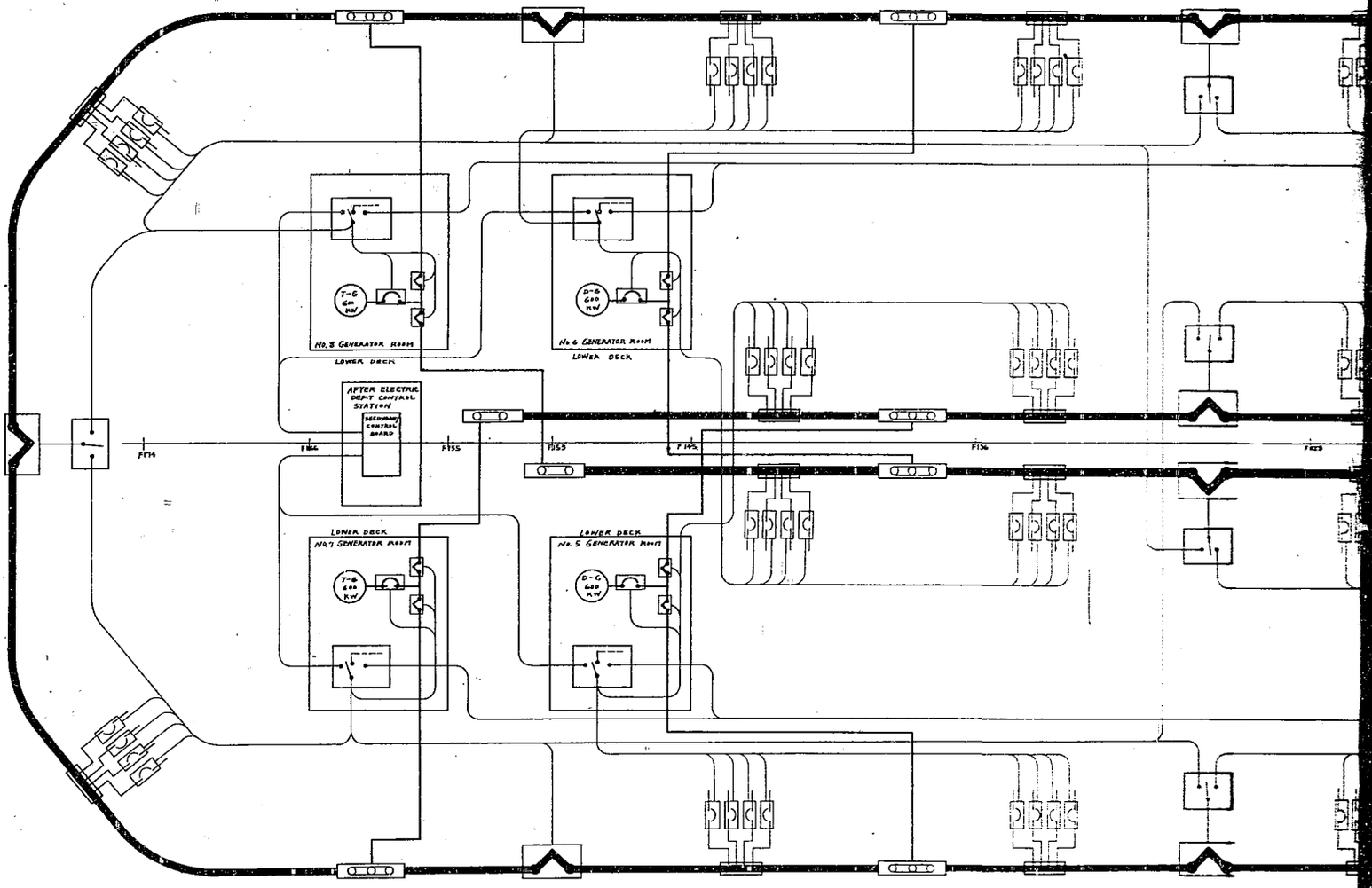

Figure 3
BB YAMATO
Plan Showing Ring Main Primary Di
Including Control Sy

loads. Two diesels are used because Japanese experience has indicated that diesels are subject to more mechanical failures than turbines.

In YAMATO, which is the latest Japanese battleship design, there were eight generators installed in separate compartments, four 600 kw turbo-generators and four 600 kw diesel generators. The Japanese Navy Ministry states that the four turbo-generators with overload capacity were capable of carrying the calculated battle load.

The standard practice in destroyers was to install two diesel generators and one turbo-generator. In destroyers and destroyer escorts the generator capacity was based on a minimum of 60% of the connected load and the turbo-generator always was of sufficient capacity to carry calculated cruising and anchor loads. It was the Japanese practice to operate diesels only under battle condition.

Table I indicates the capacity of the primary plants on various classes of Japanese naval vessels. It will be noted that the generator capacity on Japanese vessels is considerably less than the generator capacity installed on vessels of comparable displacement in the U. S. Navy. One reason for this is the fact that turbine driven auxiliaries are used quite extensively. Auxiliaries for propulsion are turbine driven. Condensate pumps and condenser cooling water pumps for turbo-generator are often directly connected to the turbo generators. In fact, in battleships the turrets are hydraulically driven from turbine driven pumps located in the machinery spaces.

c. Relative Location of Primary Power Plants

In cruisers and aircraft carriers it is the Japanese practice to install two of the above mentioned power plants in two generator compartments forward of the machinery space and two of the generator plants in two generator compartments aft of the machinery spaces. The generator plants are always within armor in armored vessels; no attempt, however, is made to select compartments below the the waterline for the generators. In fact, in one vessel the forward two generator compartments may be in the hold while the after two generator compartments are on the highest deck below armor. Each of the two forward generator plants are located in outboard compartments athwartships from each other and as a rule at least two watertight longitudinal bulkheads are run between the two compartments. The two after generator compartments are similarly located athwartships aft of the machinery spaces. Figures 1 and 2 show the relative location of the generator compartments on a typical cruiser and aircraft carrier.

Where in-line switchboards are installed for power distribution, they are placed in separate watertight compartments, quite often at different deck levels than the generator compartments. Figure 1 shows the location of the switchboards for such an installation.

In BB YAMATO four of the power plants, two turbine and two diesel, were located in separate compartments at the forward end of the machinery spaces, and the other four plants, two turbine and two diesel, were located at the after end of the machinery spaces. Figure 3 shows the relative location of the generator plant. Although installed within the armored box all but two of the generator plants in YAMATO were installed above the waterline.

In destroyers and destroyer escorts the latest practice is to install the turbo-generator plant in one engine room and the diesel generator plant in the other engine room. However, in the older destroyers

such as the ASASHIO class the entire power plant was installed in one engine room, while in the earlier vessels of the TERUTSUKI class the turbo-generator and one diesel generator were installed in the forward engine room and only one diesel generator was installed in the after engine room. Figure 4 shows the relative location of the power plants on a late destroyer. It should be noted that there is only one watertight transverse bulkhead between the two compartments. In the MATSU class (destroyer escort) there is a boiler room between the two engine rooms which contain the power plants. This arrangement is shown in Figure 9.

3. Methods of Distributing Primary Power

Two basic types of distribution systems were used in Japanese naval vessels, the in-line switchboard radial distribution systems and the ring main distribution system. The in-line switchboard radial distribution system had been installed in all destroyers, destroyer escorts and smaller vessels, and some of the latest designs of cruisers and aircraft carriers. Ring main distribution systems were installed in all battleships as well as on all of the older designs and some of the newer designs of cruisers and aircraft carriers. This method of distribution has been employed on 225 volt D.C. vessels and 450 volt A.C. vessels. As nearly as can be determined, experience convinced the Japanese that the comparatively long ring main distribution sections are more vulnerable than the more compact in-line switchboards located in watertight compartments. Therefore, toward the close of hostilities every effort was being made to incorporate the in-line switchboard in cruisers and aircraft carriers being designed. In fact, in-line switchboards and 450 volt power plants were being installed in aircraft carriers of the UNRYU class under construction at the close of hostilities. There is no record of an in-line switchboard radial distribution system having been installed in a cruiser or aircraft carrier with a 225 volt D.C. primary power plant.

a. Ring Main Distribution Systems

The ring main is a continuous loop bus running in a wireway tunnel around the machinery spaces. In some vessels the athwartship section of the ring main is just forward and just aft of the machinery spaces while in other vessels the athwartship section of the ring main is just inside the forward and after ends of the armored box. In D.C. vessels separate cables are used for the two ring main fuses and in A.C. vessels a three conductor cable is used for the buses. This loop is divided into sections by segregation circuit breakers which are electrically operated and have no protective feature. As a rule there are as many sections as power plants with one generator feeding each section. It was standard practice on cruisers and aircraft carriers to install a diesel plant consisting of two diesel generators, one diesel being connected to the ring main in such a manner that it may be used to supply power to either of two sections. Figure 5 shows the ring main for the light cruiser OYODO which is typical for Japanese cruisers and aircraft carriers. Figure 2 is a ring main installation diagram for the same vessel.

Each generator feeds the loop through an electrically operated type ACB circuit breaker which is in a watertight enclosure and located in the same compartment as the generator. Distribution of power, in most cases, is from the ring main through feeder circuit breakers, which are in individual watertight boxes and located in the ring main wiring tunnel. In some vessels the steering power supply is taken from the ring main or the generator feeders to the ring main through a fused box. The feeder circuit breakers are connected to the ring main through feeder supply boxes. Figure 6 is a photograph of one of the feeder supply boxes installed in the ring main tunnel in

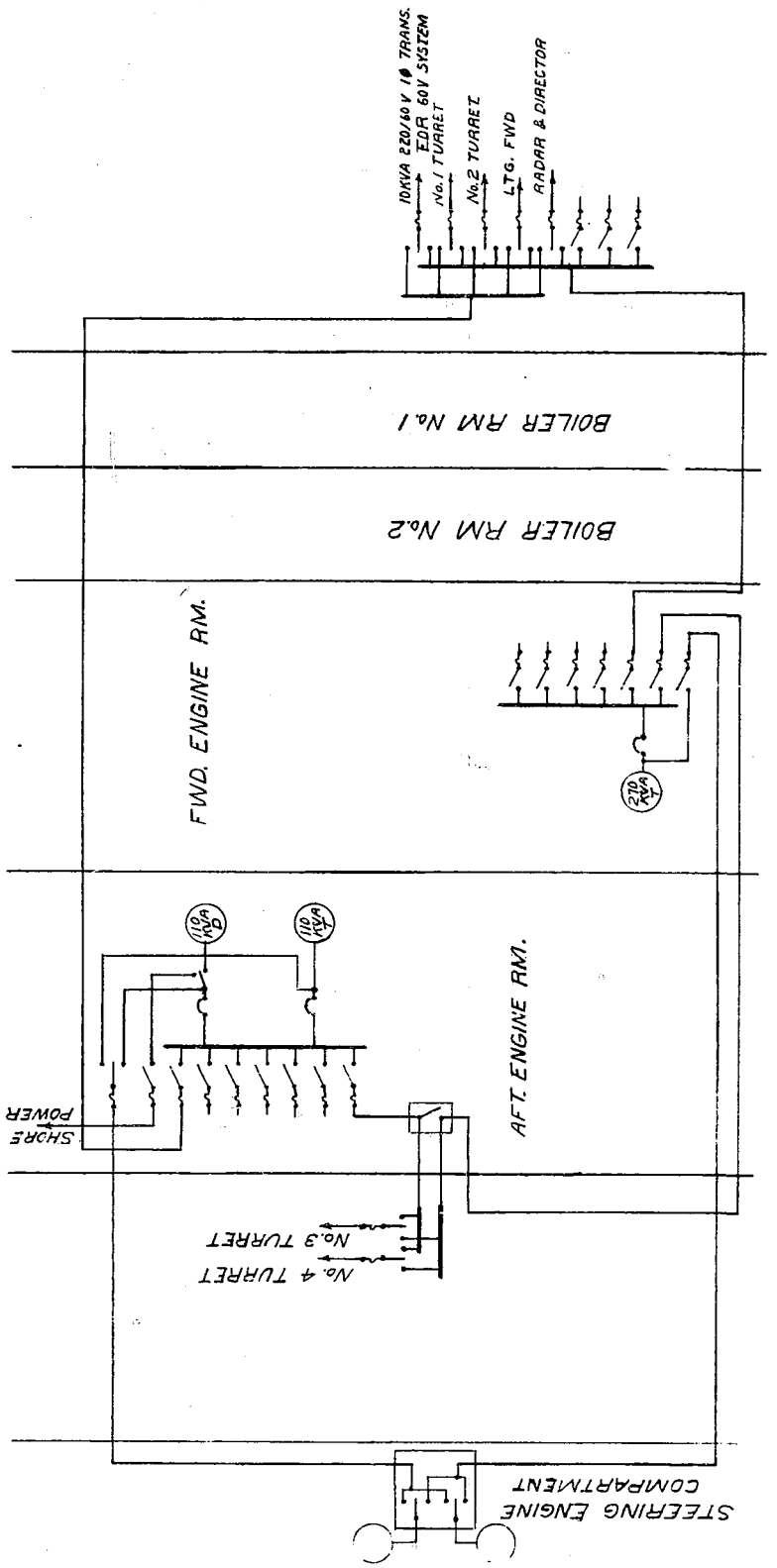

Figure 4
DD HARUTSUKI (TERUTSUKI CLASS)
Primary Power System

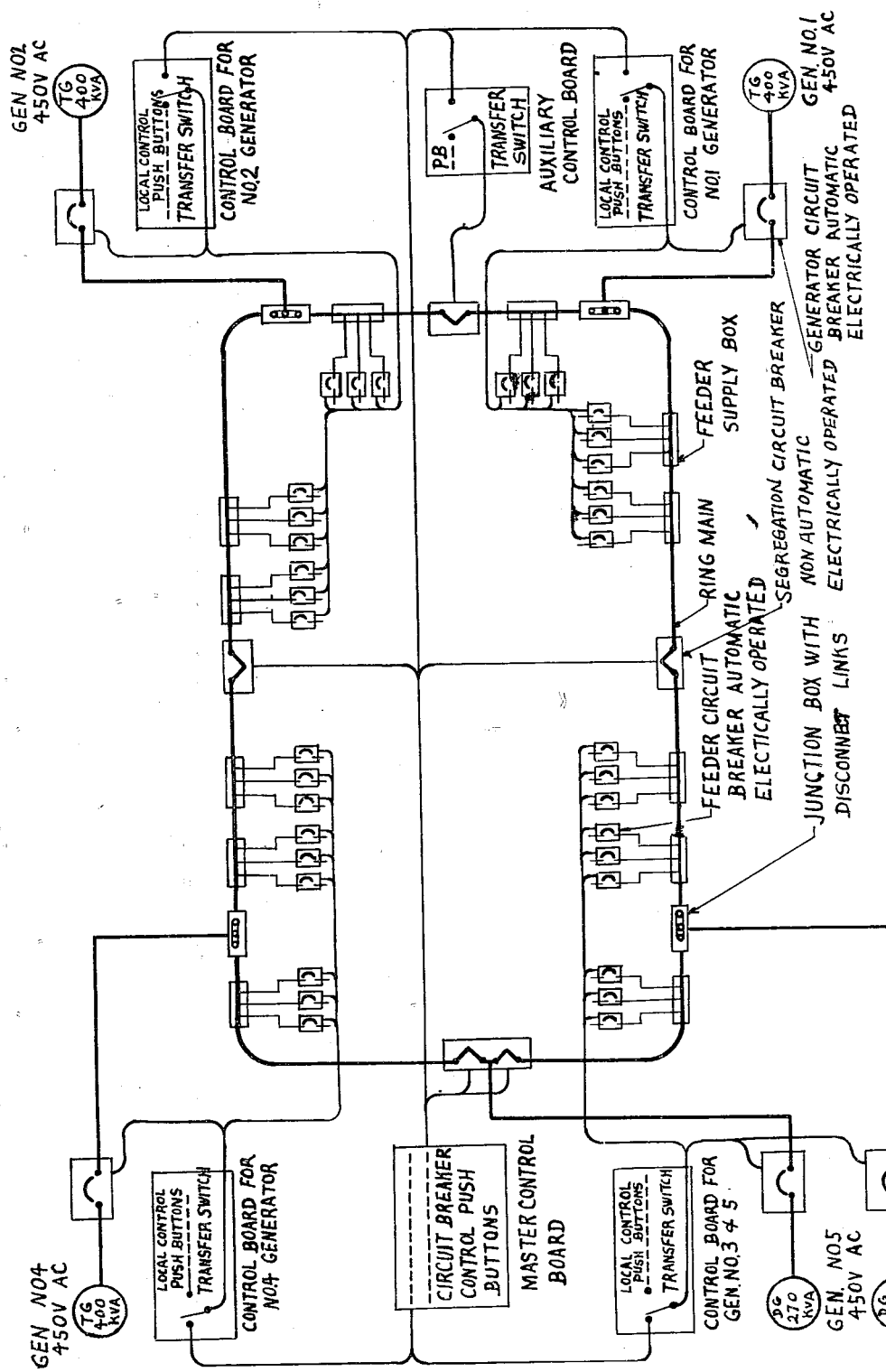

Figure 5
CL OYODO
Diagram Showing Ring Main,
Feeder Circuit Breakers,
and Circuit Breaker Control Points

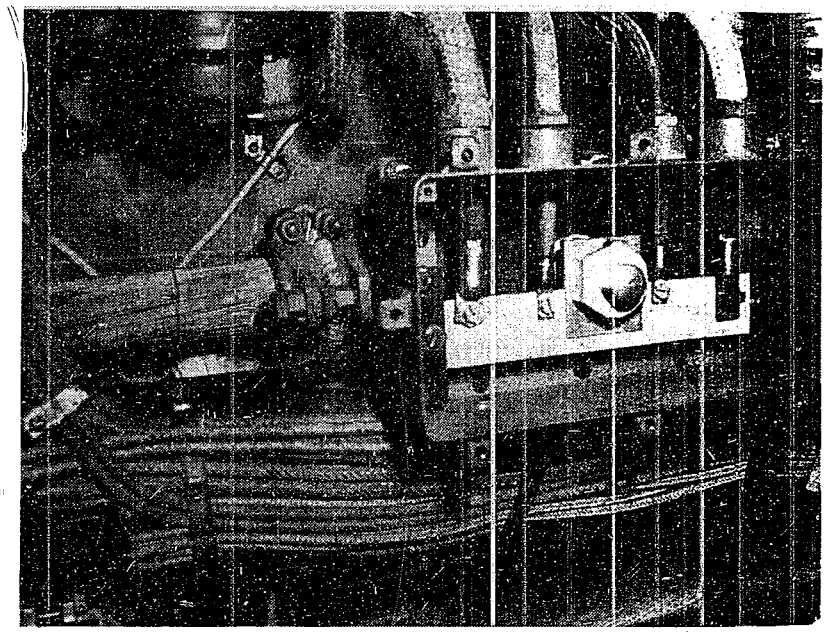

Figure 6
CV KATSURAGI
Feeder Supply Box Connected to Ring Main
in Ring Main Wiring Tunnel

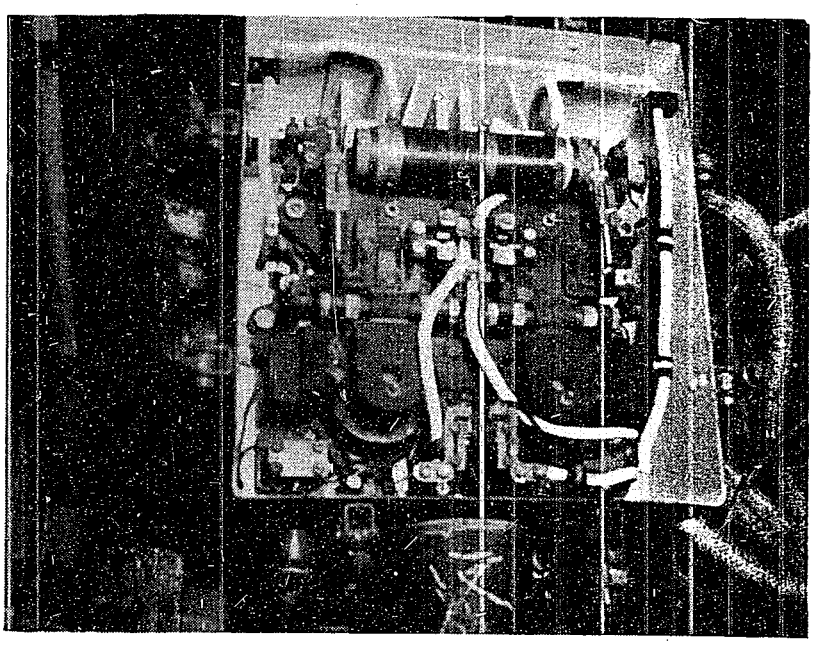

Figure 7
CV KATSURAGI
Feeder Circuit Breaker Located
in Ring Main Wiring Tunnel

KATSURAGI. As are all circuit breakers installed in Japanese naval vessels, the feeder circuit breakers used for distribution from the ring main are type ACB. Figure 7 is a photograph of a feeder circuit breaker installed in the ring main wiring tunnel in KATSURAGI.

In battleships the ring main is more extensive than the installation in cruisers and aircraft carriers, having cross-connections and in some cases longitudinal buses running in a tunnel amidships. Figure 3 shows the ring main for YAMATO.

As already noted, the circuit breakers installed in the ring main distribution system are generator and feeder circuit breakers, both of which have protective features and ring main segregation circuit breakers, which have no protective features and are merely electrically operated switches. It is standard practice to feed all loads of over 15 KVA direct from individual feeder circuit breakers and all loads of 15 KVA and under from fused distribution panels which have no switches. However, in certain cases, such as tunnels where a number of loads are used for the same function, loads of greater than 15 KVA are grouped on a distribution panel. Distribution panels are fed either from feeder circuit breakers or from other distribution panels. No-load center panels such as are used in U. S. naval vessels are installed in Japanese cruisers, aircraft carriers, and battleships. Figure 8 is a photograph of one of the distribution panels installed in KATSURAGI.

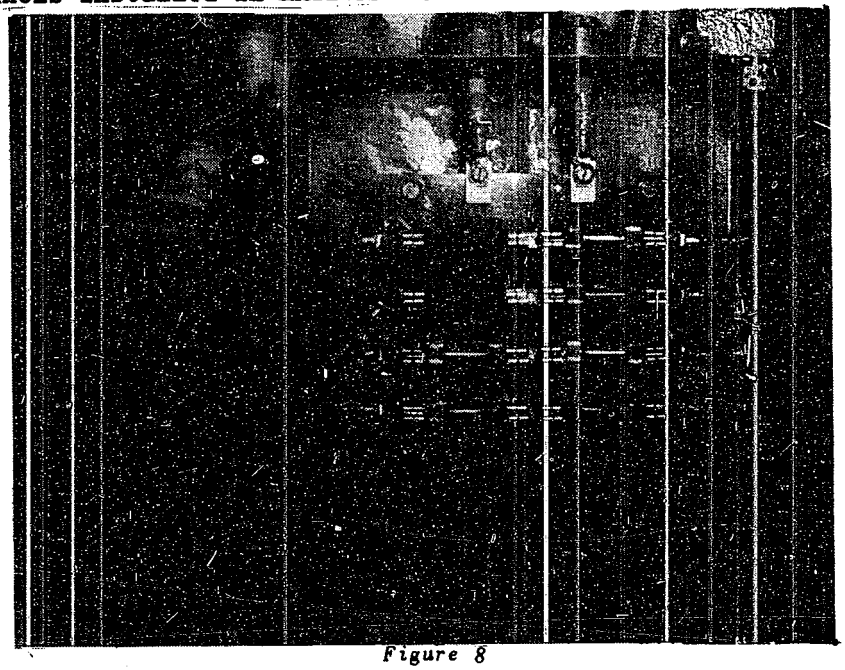

Figure 8
CV KATSURAGI
Distribution Panel Located
in Ring Main Wiring Tunnel

Section I-B-2 of this report contains a discussion of the overcurrent protection in these circuit breakers and fuses. Reverse power relays are installed for tripping of generator circuit breakers and fuses. For a discussion of the characteristics of these relays see section I-B-2 of this report.

Generator circuit breakers, segregation circuit breakers and feeder circuit breakers are all remote electrically operated. In all vessels inspected there was no local control for these circuit breakers

either manual or electrical. In most vessels there are three points of control for the circuit breakers and generators as follows: side engine control boards, a master control board and a secondary control board. Figure 5 shows the control points for the cruiser OYODO and Figure 3 shows the same for the battleship YAMATO.

There is a side engine control board for each generator plant located in the same compartment as the generators. Each side engine control board has all necessary equipment for the operation of the section of the ring main feed by the local generator plant as an independent system. The main control board is for the control of all generator plants as a unit, and is located in a separate watertight compartment in the vicinity of either the forward or after generator plants. The secondary control board is located in the vicinity of the power plants at the end of the vessel opposite that in which the main control board is located. As a rule, it had all necessary equipment and instruments for control of either the forward or after half of the generator plants depending upon its location. Therefore, there are three types of control boards provided for the operation of the power plant in any of three ways as follows: (1) the operation of each generator plant as an independent unit by the use of the local side engine control boards, (2) the operation of all plants as one unit from the main control boards, or (3) the operation of the vessels power plants as two units, a forward and after section, by the use of both the secondary control board and the main control board.

All transfer of control points from one panel to another is accomplished by switches located on the side engine control board except that switches, as a rule, are installed adjacent to each segregation circuit breaker so that control of this breaker may be connected to either of two side engine control boards.

In some vessels there are no side engine control boards, all control being accomplished at the main control board and the secondary control board. In these vessels the devices are controlled from both control boards and have two sets of control leads, one set running to each control board, each set of control leads being fused at the device.

The standard Japanese practice was to operate the power plants from the side engines control boards with all segregation circuit breakers open under battle condition and to operate the plant as a single unit from the master control board under cruising and anchor conditions. Where no side engine control boards were installed, the standard method of operation under battle condition was with all segregation circuit breakers open and one half of the power plant controlled from the main control board and the other half from the secondary control board.

b. <u>In-Line Switchboard Radial Distribution System in Cruisers and Aircraft Carriers</u>

In cruisers and aircraft carriers, that have the in-line switchboard radial method of distribution, four electrical plants have been installed. Figure 32 shows the location for the aircraft carrier TAIHO, which is typical for an in-line switchboard installation. The generators and generator circuit breakers for each plant are located in a watertight compartment separate from the switchboard. Each switchboard consists of a distribution section and a control section. The distribution section of each switchboard has one bus to which all feeder circuit breakers are connected. All distribution from the switchboard is through electrically operated type ACB circuit breakers.

It is standard practice to feed all loads of over 15 KVA direct from individual feeder circuit breakers and all loads of 15 KVA and under from fused distribution panels which have no switches. However, in certain cases, such as turrets where a number of loads are required for the same function, loads of greater than 15 KVA are grouped on a distribution panel. Distribution panels are fed either from feeder circuit breakers on the switchboard or from other distribution panels. No-load center panels such as are installed in U. S. naval vessels are used in Japanese cruisers and aircraft carriers.

As already noted the circuit breakers installed in aircraft carriers and cruisers for the in-line switchboard radial system are feeder and generator circuit breakers. In addition, there are bus tie circuit breakers, as indicated in Figure 1, which have no protective features and are essentially nothing more than electrically operated switches. The only other protective features of this system are fuses installed in distribution panels as noted above. Section I-B-2 of this report contains a discussion of the overcurrent protection of the circuit breaker and fuses. Reverse power relays are installed for the tripping of the generator circuit breaker. For a discussion of the characteristics of these relays see section I-B-2 of this report.

As stated herein, each switchboard has a control section for the control of the generator feeding that board and control of the feeder circuit breakers. In addition, there is a master control board located in a separate compartment. Figure 1 shows the location of this board with respect to the rest of the primary power plant in TAIHO. This master control board has equipment for all metering and control functions that are installed on the local control board; the latest practice, however, is to install voltage regulators only on the local control board with voltage adjusting rheostats on both the local and master control boards. All metering on the master control board is taken from transformers separate from those used for local metering. Transfer switches are provided on the local control board for transferring generator control and circuit breaker electric control from the local control board to the master control board.

The master control board was used under cruising and anchor conditions for control of the primary electric plant. Under battle conditions it was standard practice in the Japanese Navy to operate each electrical plant from the local control board as a separate plant with all bus ties open. There is no reason why, with the proper use of communication facilities, the electric plants could not be operated from the local control panels under cruising and anchor conditions when the bus ties are closed. Therefore, the installation of the master control board is considered an unnecessary use of equipment.

c. In-Line Switchboard Radial Distribution Systems in Destroyers and Destroyer Escorts

The latest practice in destroyers and destroyer escorts was to install two power plants, one diesel and one turbine. The diesel plant is located in one engine room and the turbine plant in the other (see Figure 4). The switchboards for each power plant have manually operated generator circuit breakers, fused knife switches for distribution and one bus tie between the two switchboards with fused knife switches for connecting the bus tie to each switchboard bus.

Power is distributed directly from the switchboard, from fused distribution panels without switches and from load center panels. According to the Japanese Naval Ministry, it is standard practice to feed all loads of 5 KVA and over, except turret motors, direct from the

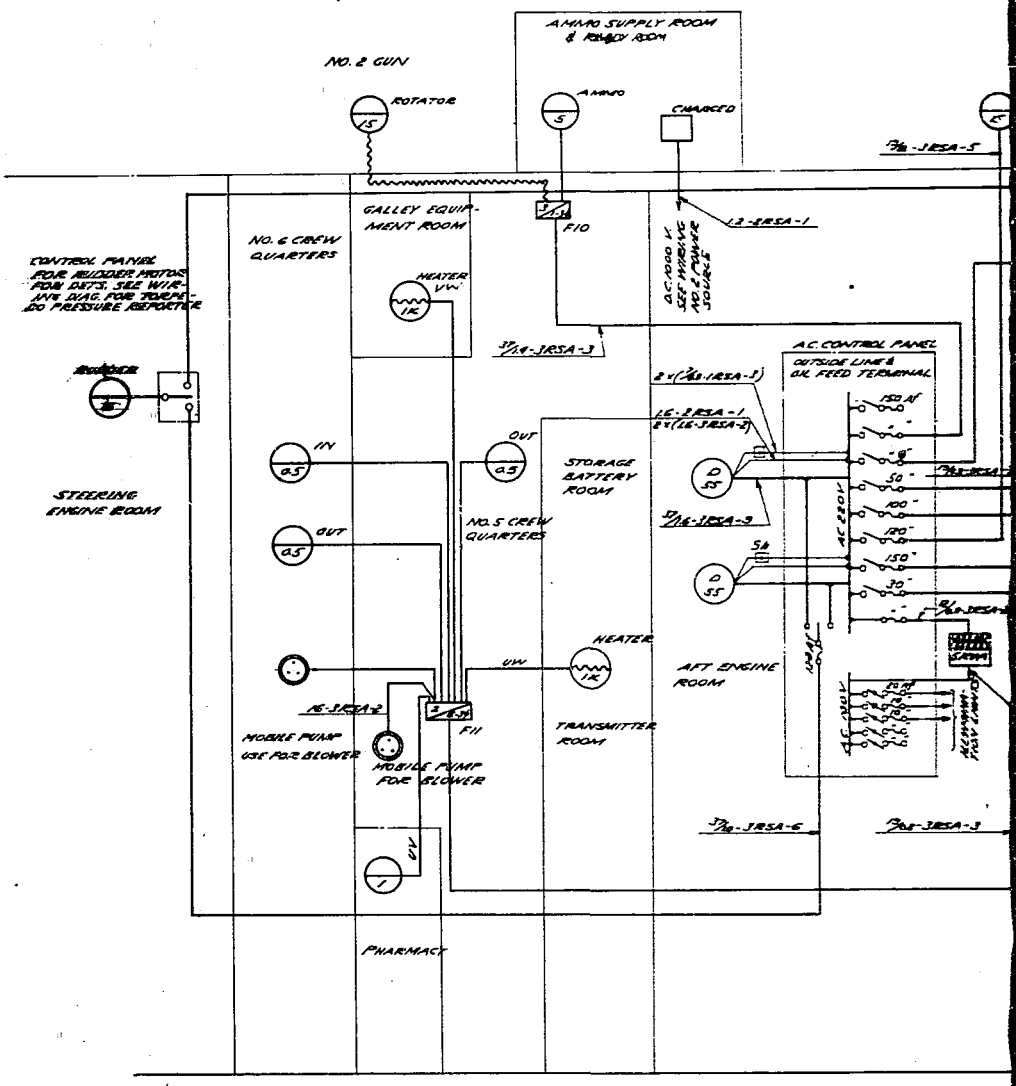
AMMO SUPPLY ROOM & READY ROOM
NO. 2 GUN
ROTATOR
AMMO
CHARGER
GALLEY EQUIPMENT ROOM
NO. 6 CREW QUARTERS
F10
HEATER VW 1K
CONTROL PANEL FOR RUDDER MOTOR, RAM DUCTS, SEE WIRING DIAG. FOR TORPEDO PRESSURE REPORTER
STEERING ENGINE ROOM
IN
OUT
OUT
NO. 5 CREW QUARTERS
STORAGE BATTERY ROOM
A.C. CONTROL PANEL
OUTSIDE LINE & GR. FEED TERMINAL
AFT ENGINE ROOM
HEATER
VW
1K
F11
MOBILE PUMP USE FOR BLOWER
MOBILE PUMP FOR BLOWER
TRANSMITTER ROOM
PHARMACY
A.C. 1000 V. SEE WIRING NO. 2 POWER SOURCE

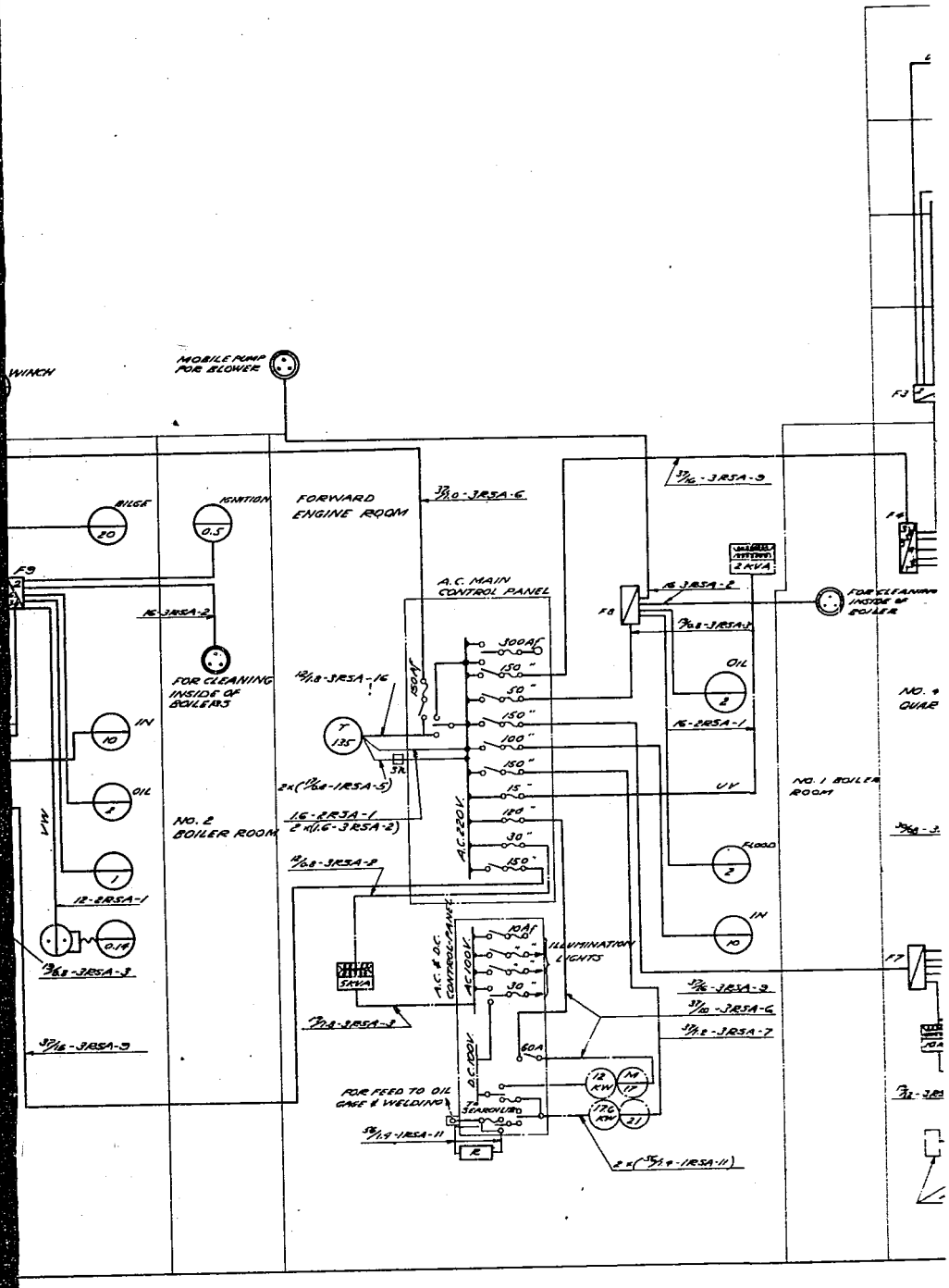

Figure 9
DE MATSU
Primary Power Distribution System

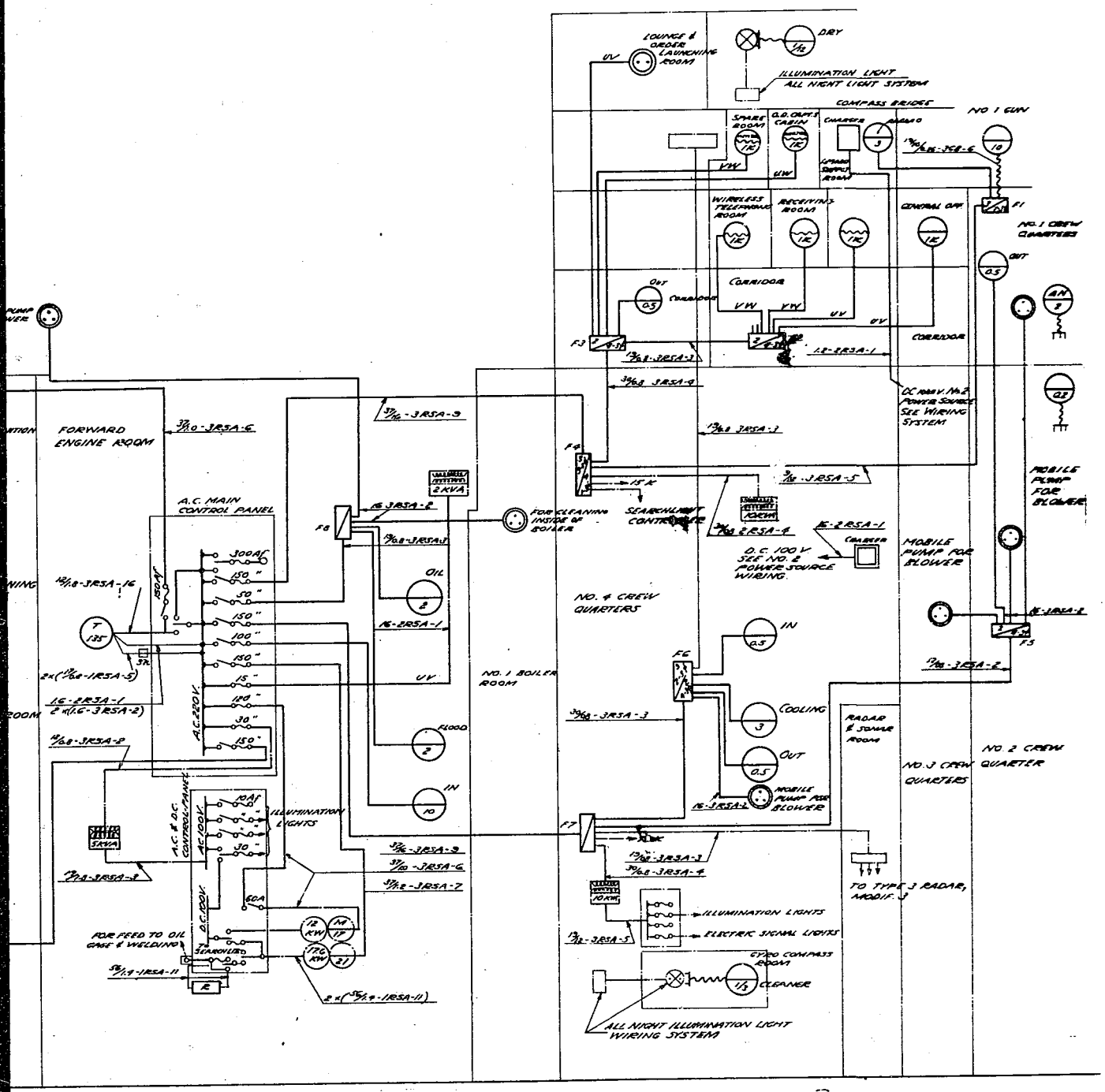

Figure 9
DE MATSU
er Distribution System

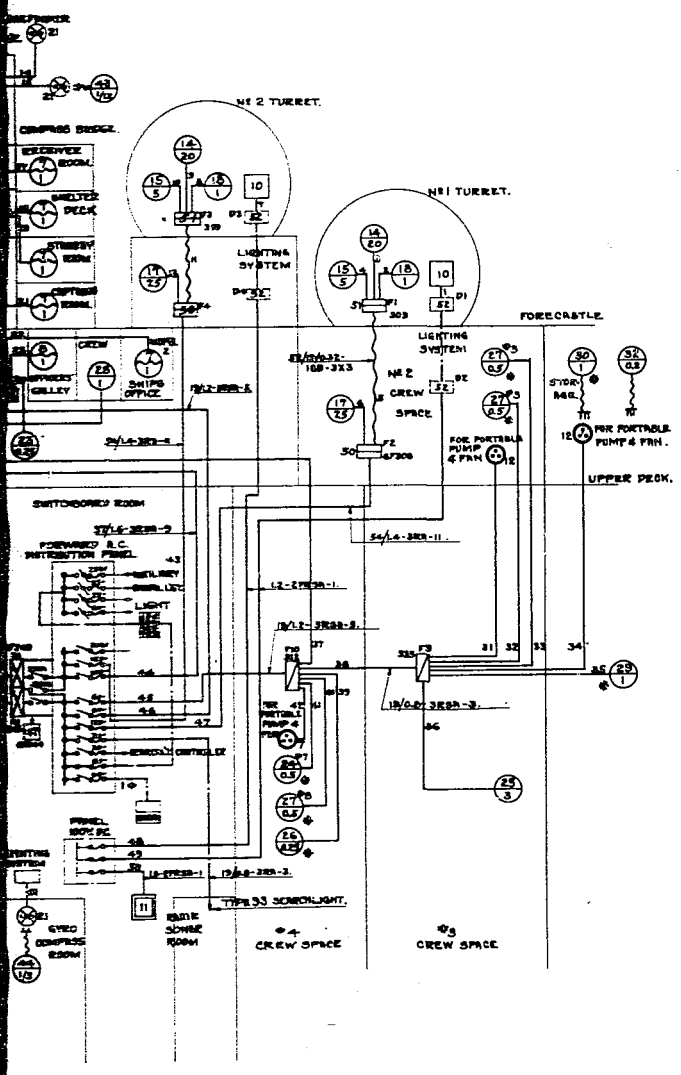

	SYM BOL	DESCRIPTION	NR
1		A.C. DIST'N. PANEL - 220V - FORWARD SECT.	1
2		A.C. DIST'N. PANEL - 220V - AFTER SECT.	1
3		MAIN A.C. DIST'N. PANEL.	1
4		SHUNT	3
5		TURB.A.C. GENERATOR - 270 KVA. 220V - 3Φ - 60~	1
6		DIESEL FOR ABOVE - 35 KVA. 230V - 3Φ - 60~	2
7		ELECTRIC STOVE 220V. - 1 KW.	8
8		ELECTRIC WATER HEATER - MODEL 2 - 220V - 1 KW.	2
9		DECONTAMINATION SYSTEM - MOD 1 - 220V - 1 KW.	1
10	10	BATTERY CHARGER - MODEL I - 100V, 5A.	4
11	11	BATTERY CHARGER - MODEL I - 100V - 10A.	1
12		JUNCT. PLATE, STERM, 10A, W.P.	9
13		SAME MOD 1.	1
14		A.A. TURRET MOTOR, 20 KW.	4
15		UPPER AMMUNITION HOIST MOTOR FOR ABOVE - 5 KW	4
16		LOWER " " " " " - 5 KW	1
17		" " " " " " - 2.5 KW	3
18		FAN FOR TURRET MOTOR - 1 KW.	4
19		TURRET TURNTABLE AIR TYPE 34 AA SYSTEM MOTOR 2.5 KW	1
20		REMAINDER INSTRUMENT DRYER MOTOR ½ H.P.	.
21		CONNECTION PLATE SWITCH, W.P.	3
22		MOTOR, 0.25 KW.	1
23		ELECTRIC REFRIGERATOR MOTOR, 0.25 KW.	1
24		AIR CIRCULATING FAN MOTOR, 0.5 KW.	2
25		REFRIGERATOR MOTOR, 3 KW.	1
26		EXHAUST FAN MOTOR, 0.25 KW.	4
27		" " " 0.5 KW.	7
28		HEATER FAN MOTOR, 1 KW.	1
29		2.5 TON FLOODING PUMP MOTOR, 1 KW.	1
30		PORTABLE PUMP MOTOR, 1 KW.	1
31		HOIST MOTOR, 7.5 KW.	1
32		PORTABLE FAN MOTOR 0.2 KW.	1
33		OIL PURIFIER MOTOR, 2. KW.	2
34		FIRE PROTECTION - BILGE PUMP MOTOR, 15 KW.	2
35		ENGINE ROOM EXHAUST MOTOR, 20 KW.	2
36		STEERING ENGINE MOTOR, 25 KW.	2
37		MAIN ENGINE ROTATION MOTOR, 3 KW.	2
38		PORTABLE SAW MOTOR, 0.5 KW.	1
39		FUEL OIL IGNITION PUMP MOTOR, 0.5 KW.	1
40		MACHINE SHOP MOTOR 1. KW.	1
41		PORTABLE FUEL OIL PUMP MOTOR, 4 KW.	1
42		BOILER OVERFLOW PUMP MOTOR, 2 KW.	1
43		TYPE 30 DRYER MOTOR, ½ H.P.	1
44		CLEANER MOTOR, ⅓ H.P.	1
45		CIRCUIT BREAKER	1
46			
47	47	PANEL	1
48	48	FUEL OIL CIRCUIT JUNCTION BOX, F.O.S.B.S. R.C.	1
49	49	JUNCTION BOX	1
50	50	CIRCUIT JUNCTION BOX - 2 CIRCUITS	2
51	51	" " " - 3 "	4
52	52	" " " - FOR POWER	2
53		" " " - PRIMARY POWER	4
54		" " " - 3Φ - 6 CIRCUITS	1
55		" " " - 3Φ - 2 "	1
56		" " " - 3Φ - 6 "	1
57		" " " - 3Φ - 8 "	1
58		" " " - 3Φ - 6 "	3
59		" " " -	3
60		" " " - MODEL 2 - 5 "	1
61		" " " - 4 "	
62	62	" " " - D.C. - FUEL OIL CIRCUIT	1
63		JUNCTION BOX, MODEL 2, 7 CIRCUITS	1
64		" " , 2 FUSES, 6 "	1
65		CIRCUIT JUNCTION BOX	1
66		" " " - 3 CIRCUITS	2

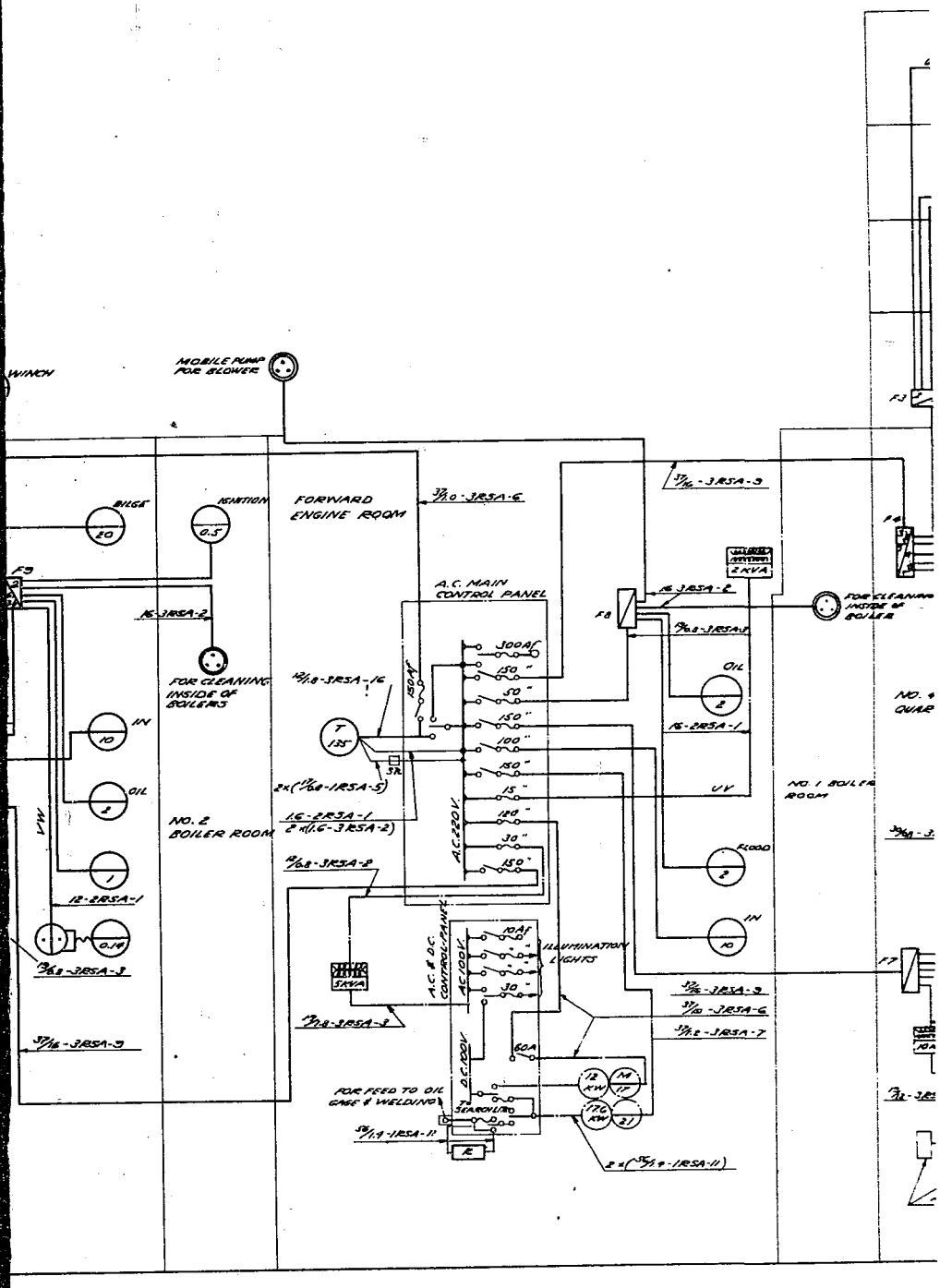

Figure 9
DE MATSU
Primary Power Distribution System

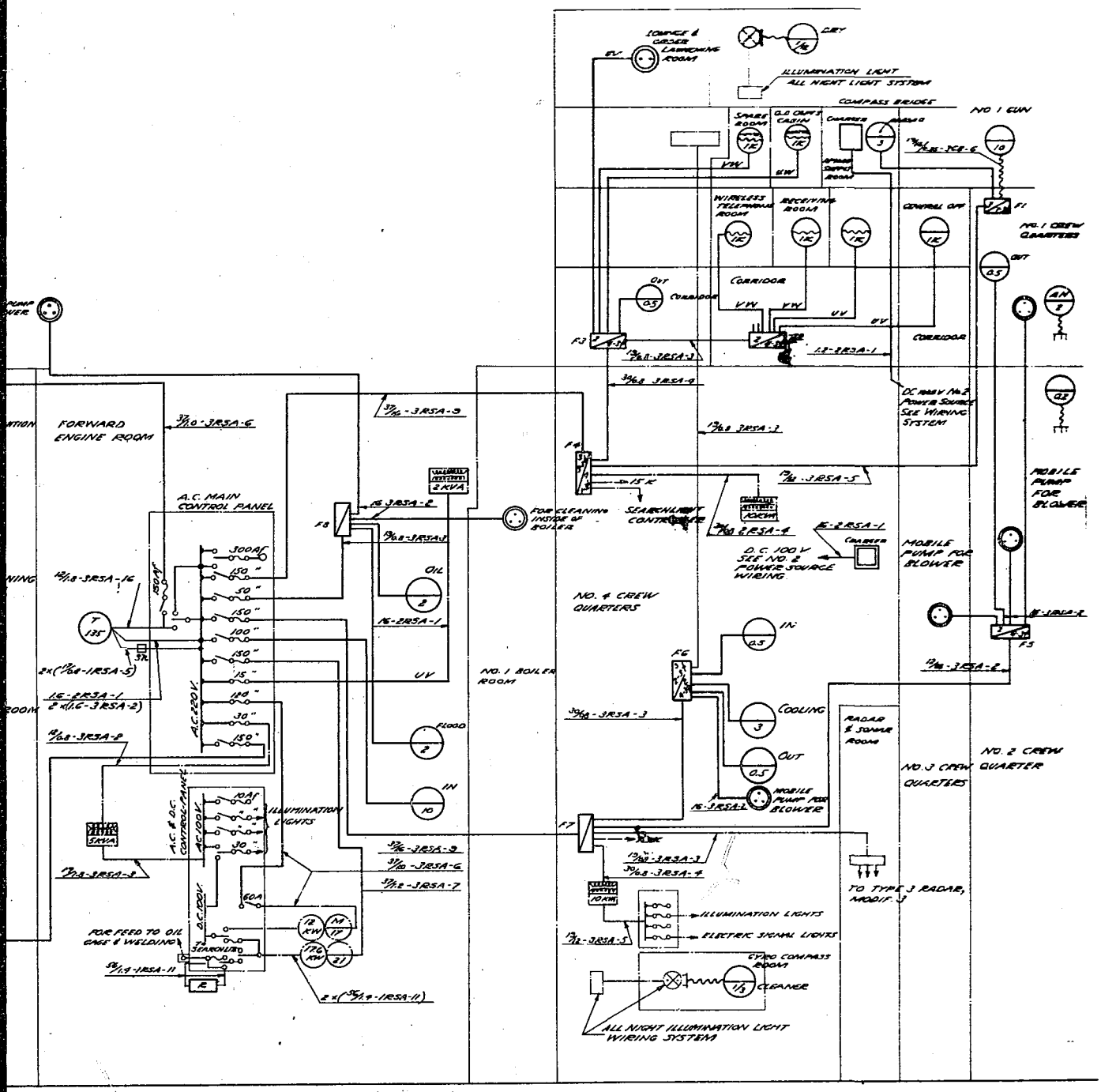

Figure 9
DE MATSU
er Distribution System

switchboards or load center panels, and all loads of less than 5 KVA from distribution panels. All of the turret motors for each turret are fed from a fused power panel which is fed directly from the switchboard or load center panel. In destroyer escorts of the MATSU class, which are the latest class destroyer escorts, this rule was followed. Figure 9 is a plan covering the primary power installation in MATSU. In ASASHIO, KAGERO AND TERUTSUKI classes of destroyers this rule was not strictly adhered to. Figure 10, covering the primary power installation in SHIMOTSUKI, a TERUTSUKI class destroyer, shows examples of loads larger than 5 KVA being fed from fused distribution panels.

The load center panels installed in the TERUTSUKI class are typical. As shown in Figure 10, the earlier vessels of this class had only one load center panel located forward. This panel had two buses, both fed from the forward power plant, one bus being fed by a port feeder and one bus by a starboard feeder. They were so arranged that in case of a fault in either feeder it could be isolated from the bus, and the two buses connected through a switch. This lead center panel supplied power to the forward two turrets, lighting forward, the 60 volt A.C. secondary system forward, the director and associated radar, and miscellaneous loads. In later vessels of the TERUTSUKI class there were two load center panels installed, one aft of the machinery spaces and one forward of the machinery spaces as shown in Figure 4. The after load center panel had two buses, one fed from the forward distribution switchboard and one supplied from the after distribution switchboard. This load center panel was used only to supply power to the two after turrets, each turret being fed from a double throw, fused knife switch on the panel. The forward load center panel had two buses, fed from each of the two main switchboards. From this panel, the two forward turrets, forward lighting, the 60 volt A.C. system, and the director and its associated radar were fed from double throw, fused knife switches. Other miscellaneous loads were fed from this panel through single throw, fused knife switches from the forward bus only.

d. Alternate Power (Duplicate Power)

The provision for a duplicate power source to equipment is quite extensive in cruisers, aircraft carriers and battleships; however, in destroyers and destroyer escorts there is very little equipment provided with alternate power. The method of transfer in practically all cases is manual. The only two cases of automatic transfer noted were the steering supply in TAIHO and a portion of the supply to the 60 volt secondary system in OYODO. In most cases duplicate power cables were run with the greatest possible horizontal separation. This was especially true of the cable runs to steering and turrets in cruisers.

In the ASASHIO and KAGERO classes of destroyers there was only one switchboard and accordingly no equipment was provided with alternate source of power. However, in these classes of vessels there was a port and starboard feeder to the steering engine. In addition, feeders to the steering engine were connected through a switching arrangement at the switchboards so that either feeder could take power from any of the three generators ahead of the generator circuit breakers. This connection at the switchboard was such that the current taken by the steering engine went through the overload coils of the generator circuit breaker. In the later classes of destroyers and destroyer escorts it was standard practice to provide two sources of power to steering only as indicated in Figures 9 and 10. However, in the late TERUTSUKI class destroyers two sources of power also were provided for turrets, director and associated radar, lighting forward and the 60 volt, secondary system forward as shown in Figure 4

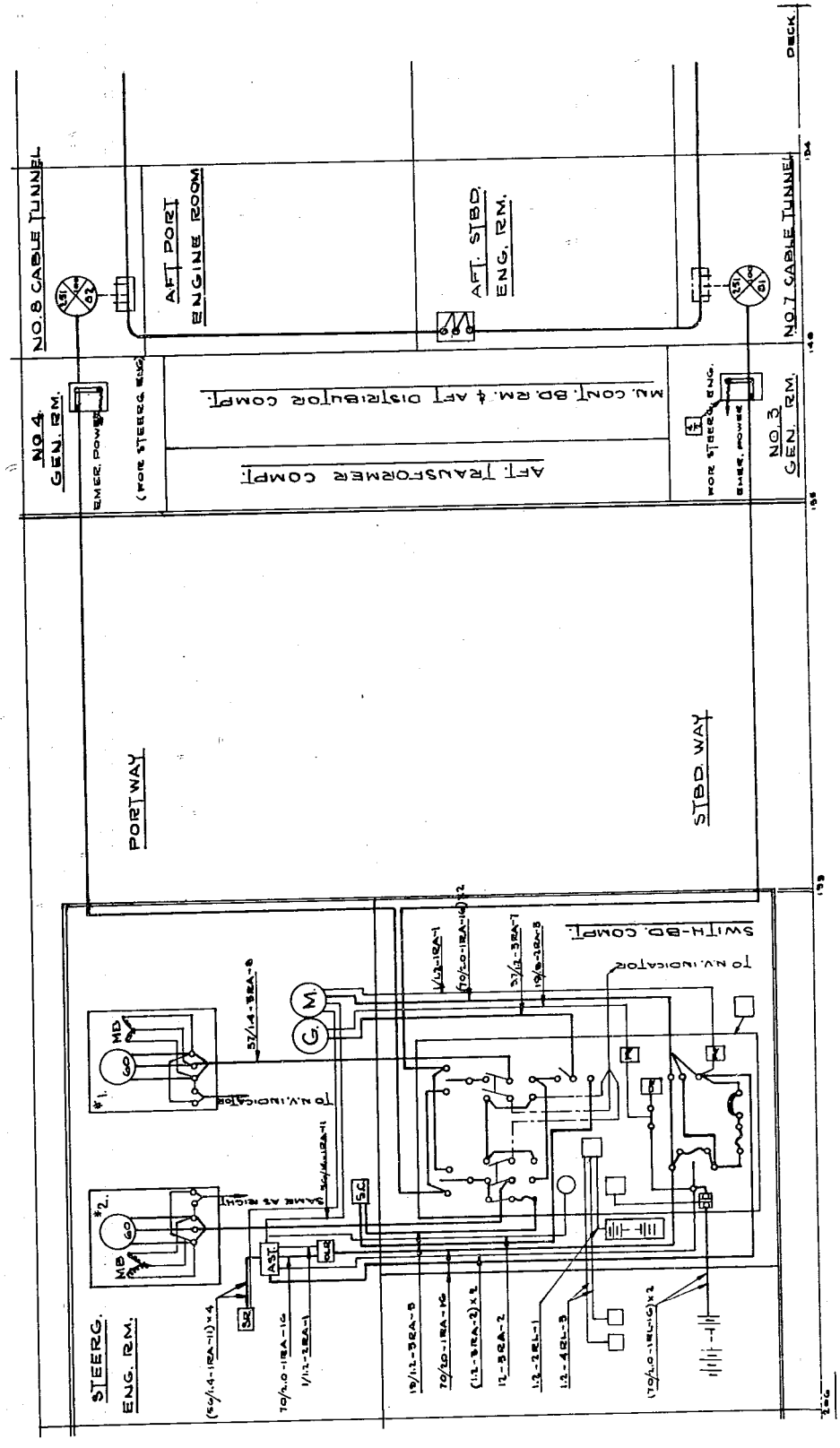

Figure 11
CL OYODO
Power Supply to Steering

and described in sub-section I-A-3-c of this report. This installation of two power sources for the turrets and director is considered to be a poor arrangement with the selection of power source remote from the equipment and a long run of only one cable.

In cruisers, aircraft carriers and battleships the Japanese practice is to provide two sources of power for all auxiliaries and equipment required in battle, that is, those auxiliaries used for combat and those necessary to maneuver the vessel. This includes the following equipment:

Turrets
Anti-aircraft guns
Directors
Fire control
Interior communications
Radio
Radar
Electric driven fire pumps
Electric driven bilge pumps
Ventilation for spaces required
to be manned under battle conditions.

Other auxiliaries and loads such as heating, galley equipment, illumination, anchor windlass, etc., have only one source of primary power.

As noted in sub-section I-A-2-c of this report, the Japanese practice in cruisers and carriers is to have two power plants forward and two power plants aft with athwartship separation only between the two forward plants and the two after plants. Further, when an in-line switchboard is used it is standard practice to locate the switchboards similar to the generator plants. In sub-section I-A-3-a it is pointed out that the ring main in cruisers and aircraft carriers is broken down into four distribution sections each of which includes one-fourth of the ring main. It has been the Japanese practice, when supplying duplicate sources of power to equipment, to take these two sources from the two switchboards with only athwartship separation or two sections of the ring main with only athwartship separation. Figure 11 indicates this arrangement for the duplicate supplies to steering in the light cruiser OYODO. In the latest cruisers and aircraft carriers the Japanese were taking one source of power from a forward plant and the other from the diagonally opposite after plant. The Japanese state that this change was made because of battle experience.

e. Miscellaneous Details of Power Distribution

The Japanese, in the design of an A.C. power installation for shipboard, required that the maximum voltage drop at the switchboard bus due to starting of motors should not be greater than 10%. However, they did not limit the use of compensated starters to those cases when the use of across-the-line starters would cause a voltage drop greater than 10%, but installed compensated or stardelta starters for all motors larger than 15 kw on 220 volt plants and all motors 30 kw and larger on 440 volt A.C. plants no matter what the capacity of the generator might have been. The U. S. naval practice is to install compensated starters only where the use of across-the-line starters would cause the voltage drop at the switchboard bus to go below a specified limit. There the selection of across-the-line or compensated starters is dependent upon the generator characteristics. The Japanese method required the installation of unnecessary control equipment, adding to the weight of the plant and requiring increased maintenance.

The selection of cable sizes for power loads was based upon the rated current carrying capacity of the cable and a maximum of 2.2% voltage drop in the cable between the switchboard bus and the load. The rated current carrying capacity of the cables are given in specifications (NavTechJap Documents Number ND22-2011 and ND22-2012) which have been forward to the Bureau of Ships. Where a single load is fed by a cable, the cable is required to have a rated capacity of full rated load for the device being supplied. Where installations of this cable result in a voltage drop of over 2.2% under full rated load, the necessary larger size cable to limit the voltage drop under full rated load to 2.2% is selected. Where a number of loads are supplied from a distribution panel, cable sizes for the common feeder cable and branch cables are selected on the basis of using the minimum copper necessary to fulfill the following requirements:

(1) The common feeder cable shall have a minimum current rating of 0.8 the sum of the full rated loads of all the equipment fed from the distribution panel.

(2) The branches feeding individual loads shall have a minimim current rating of full load for the device supplied.

(3) The greatest voltage drop between the switchboard and any load shall be 2.2% based on the minimum feeder cable current as calculated under (1) above and the minimum branch cable current as required under (2) above.

In the selection of cable sizes no consideration is given to the current required for starting motors.

In order to provide a power supply with better voltage regulation than can be obtained directly from the primary power plant, motor generators are installed for power supply to radar. As near as could be determined, the Japanese have never used constant potential output transformers for this purpose. The use of transformers is considered to be more desirable than motor generators because the transformer is a static device and does not require the maintenance and complication of control which is necessary with motor generators.

4. Secondary Power Systems

In Japanese vessels there are numerous motor generators and transformers used for special application such as radio, radar, heating and galley equipment. In addition the following principal secondary systems are installed in A.C. vessels:

60 volt, A.C., 60 cycle system for selsyns
20 volt, D.C. system for telephones
100 volt, D.C. system for reserve power
88 volt, D.C. system for searchlights and welding
100 volt, A.C. system for lighting

In D.C. vessels the principal secondary systems are as follows:

50 volt, 50 cycle, A.C. system for selsyns
20 volt, D.C. system for telephones
88 volt, D.C. system for searchlights and welding
220 volt, D.C. reserve power system

The lighting system is covered by sub-section II-A of this report and the reserve power systems are covered by sub-section I-A-5 of this report. Therefore, only the secondary system for selsyns, the 22 volt D.C. systems for telephone and the 88 volt D.C. systems for searchlights are included in this sub-section.

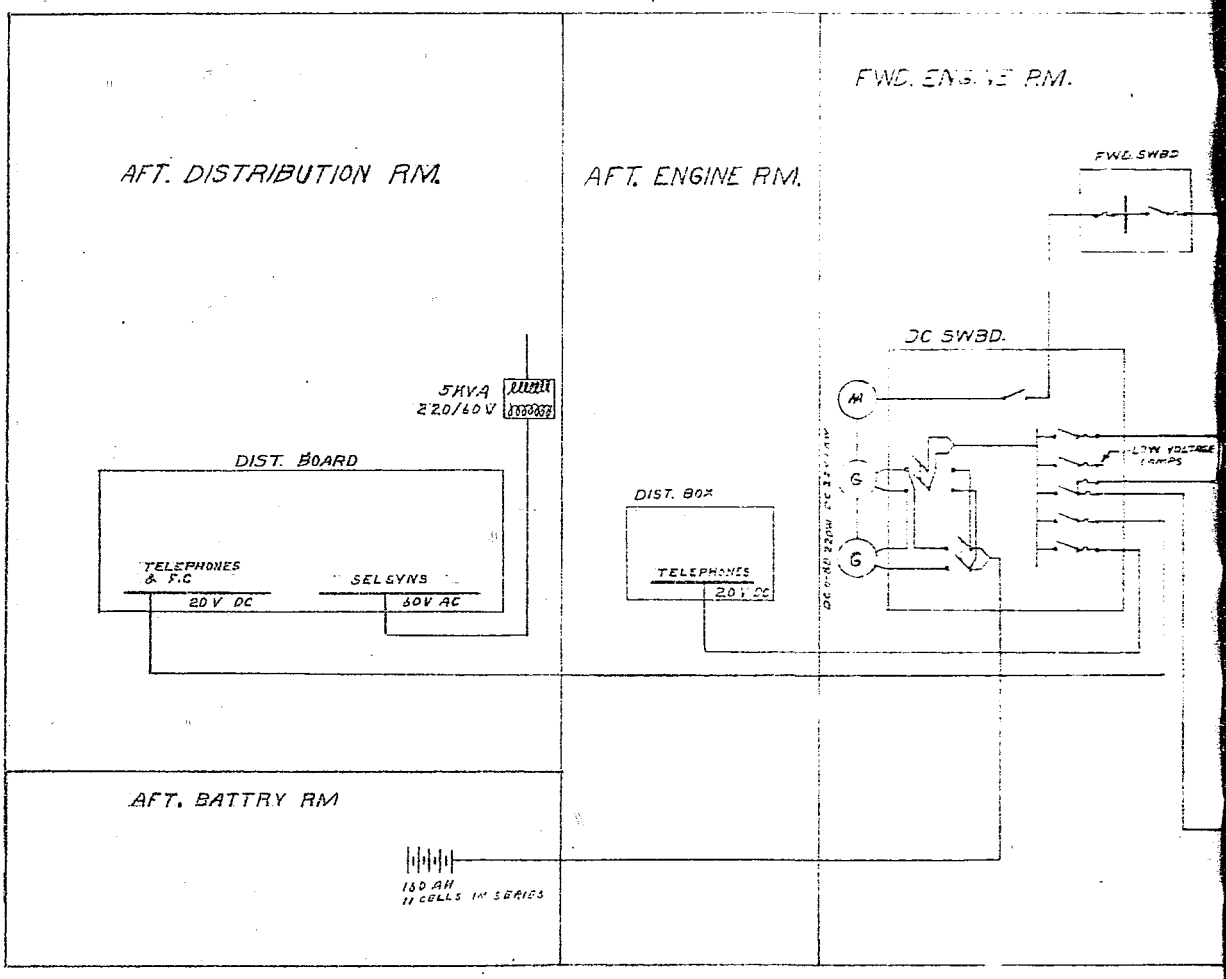
AFT. DISTRIBUTION RM.
AFT. ENGINE RM.
FWD. ENGINE RM.
FWD. SWBD
DC SWBD.
5KVA
220/60V
DIST. BOARD
TELEPHONES & F.C
20V DC
SELSYNS
60V AC
DIST. BOX
TELEPHONES
20V DC
AM
G
G
LOW VOLTAGE LAMPS
AFT. BATTRY RM
150 AH
11 CELLS IN SERIES

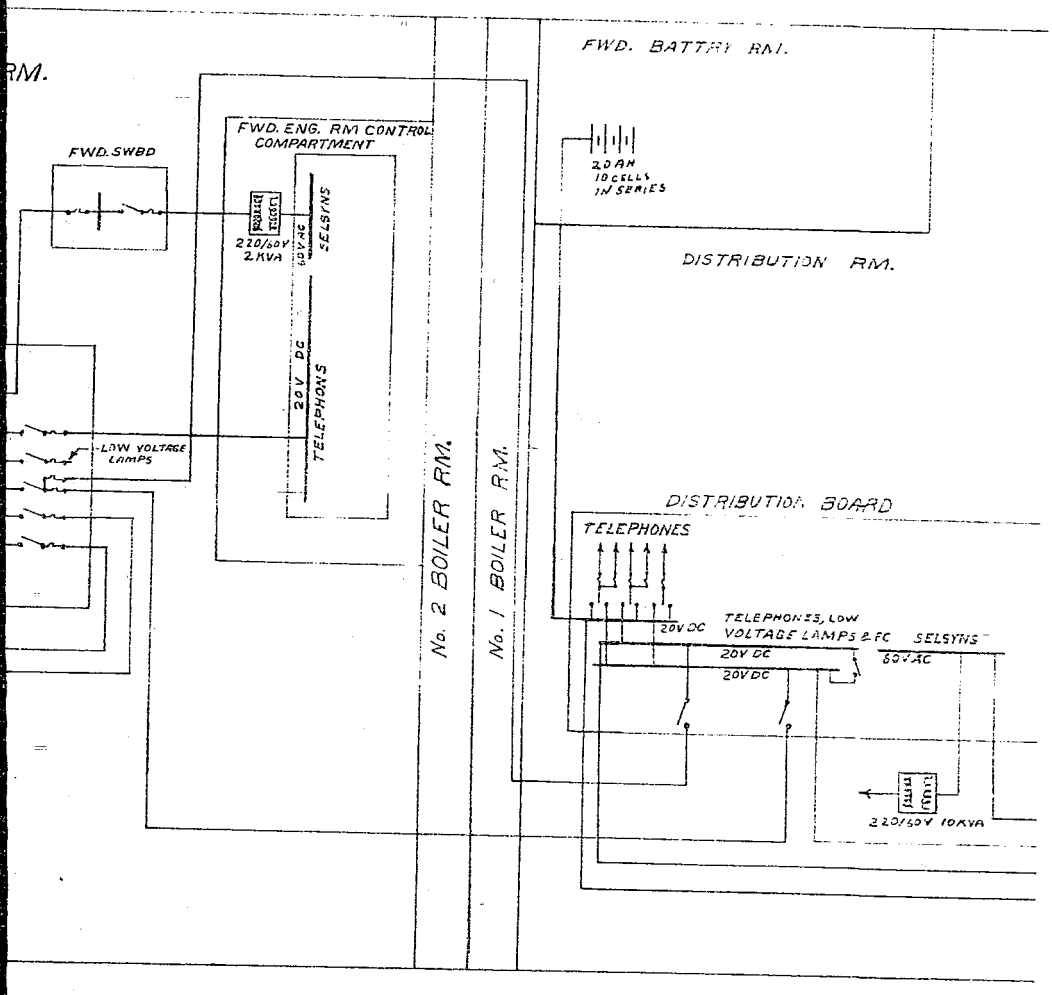

Figure 12
DD HARUTSUKI (TERUTSUKI CLASS)
Secondary Power System,
20V D.C. and 60V A.C. Systems

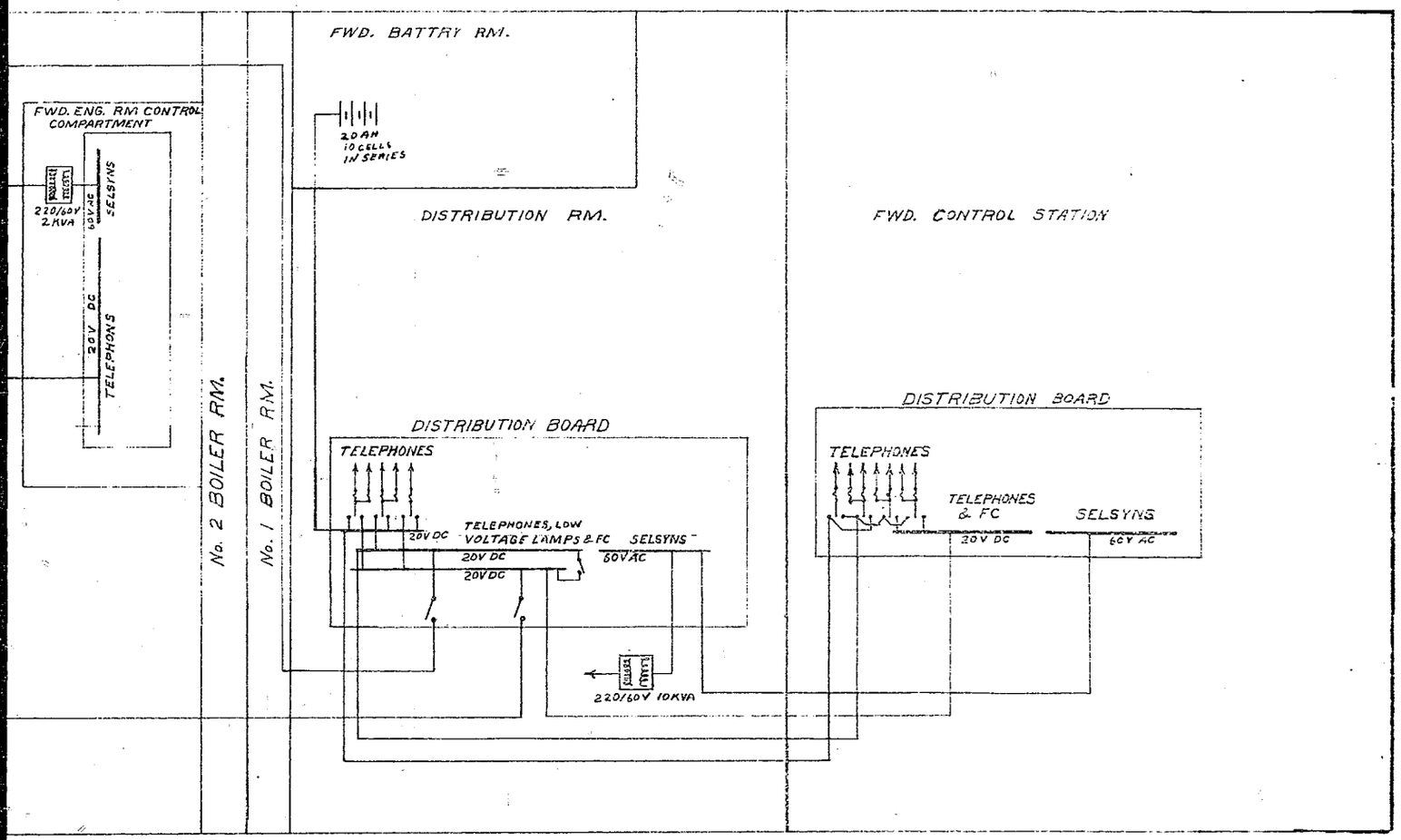

Figure 12
) HARUTSUKI (TERUTSUKI CLASS)
- Secondary Power System,
20V D.C. and 60V A.C. Systems

RESTRICTED

FOR AFTER PORTION

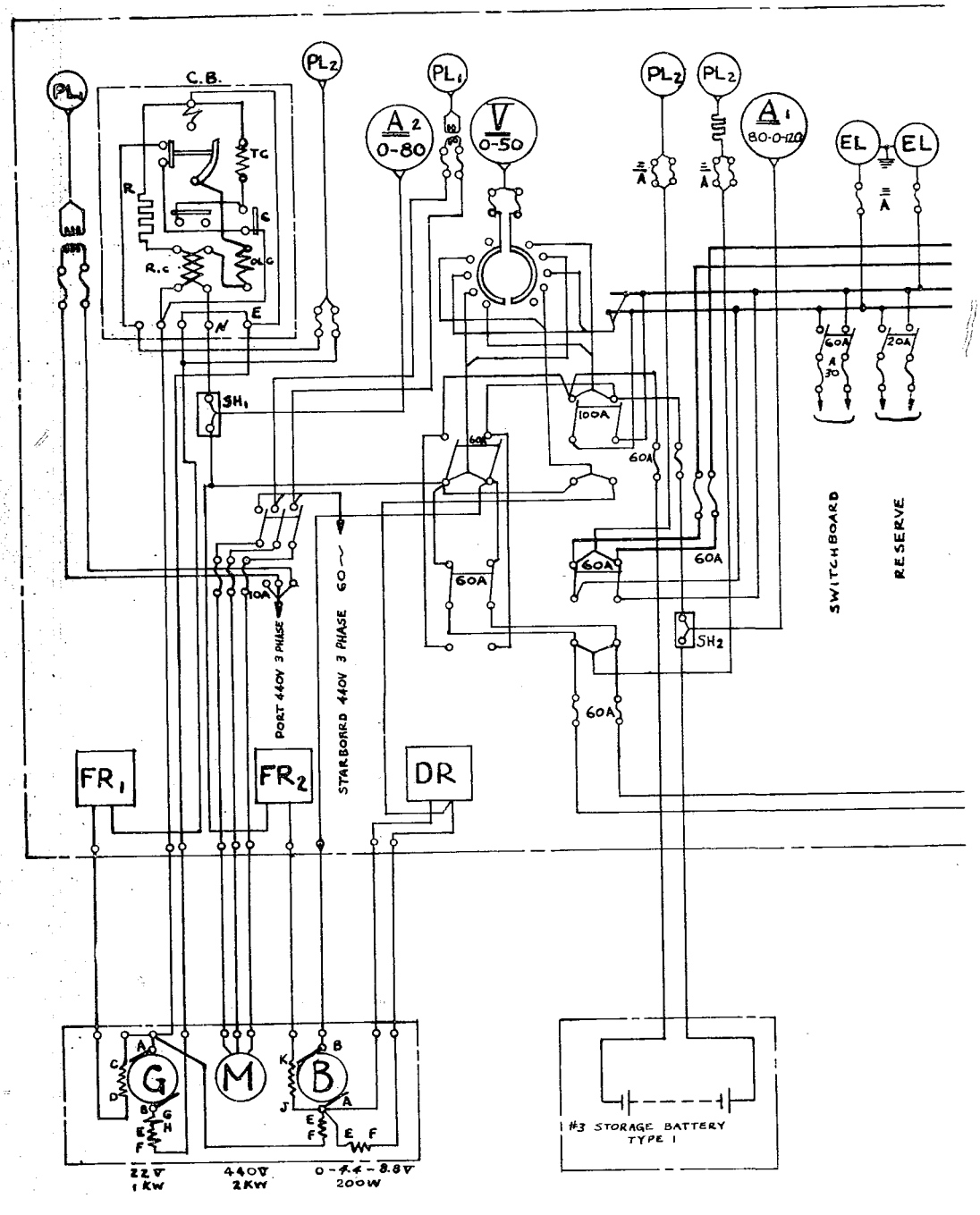

20 VOLT

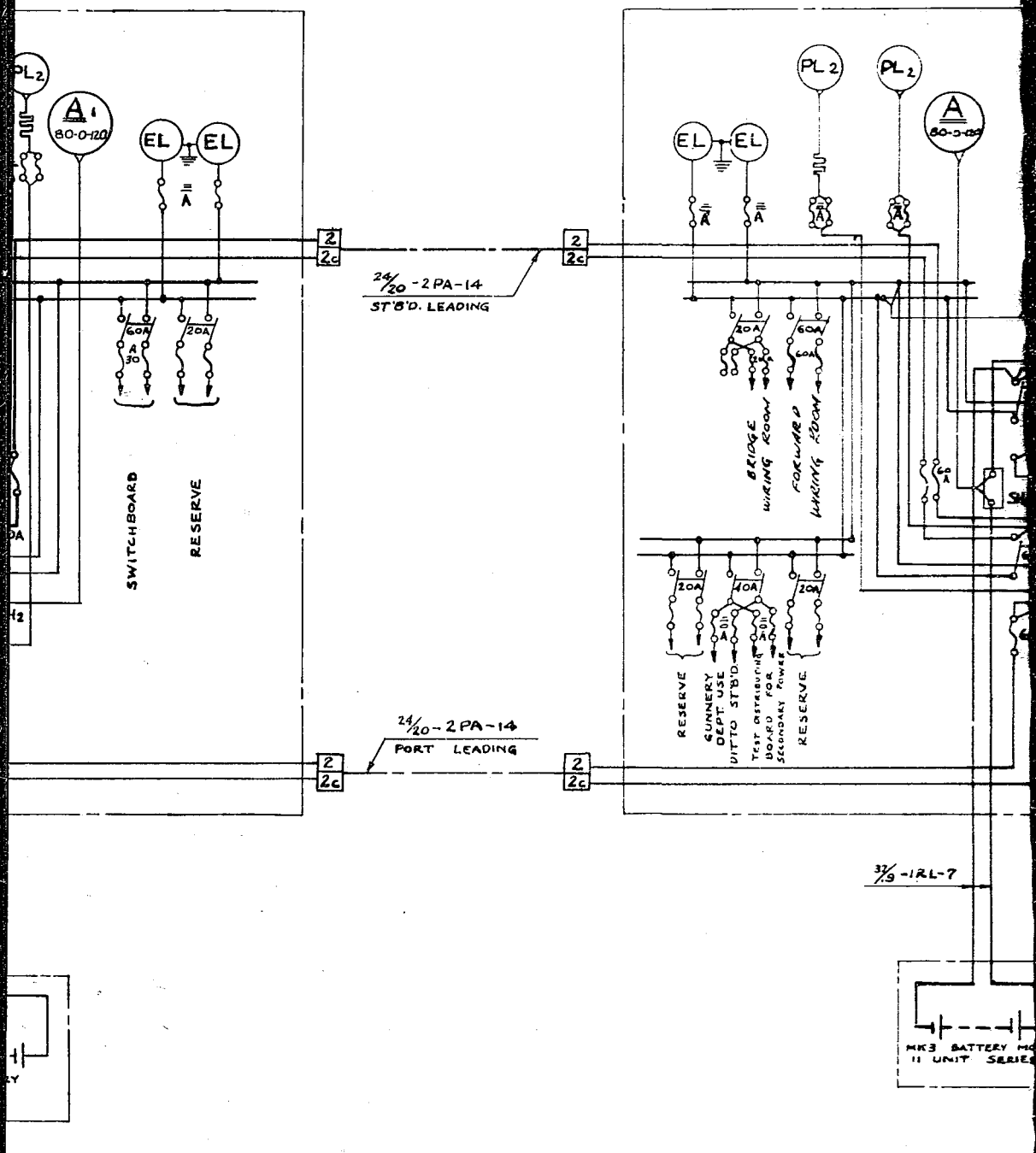

ŌYODO (CL)
20 VOLT DC GENERATOR & DISTRIBUTION

Figure 13
CL OYODO
Plan Showing 20V D.C. Generator and Distribution Switchboards

FOR FORWARD PORTION

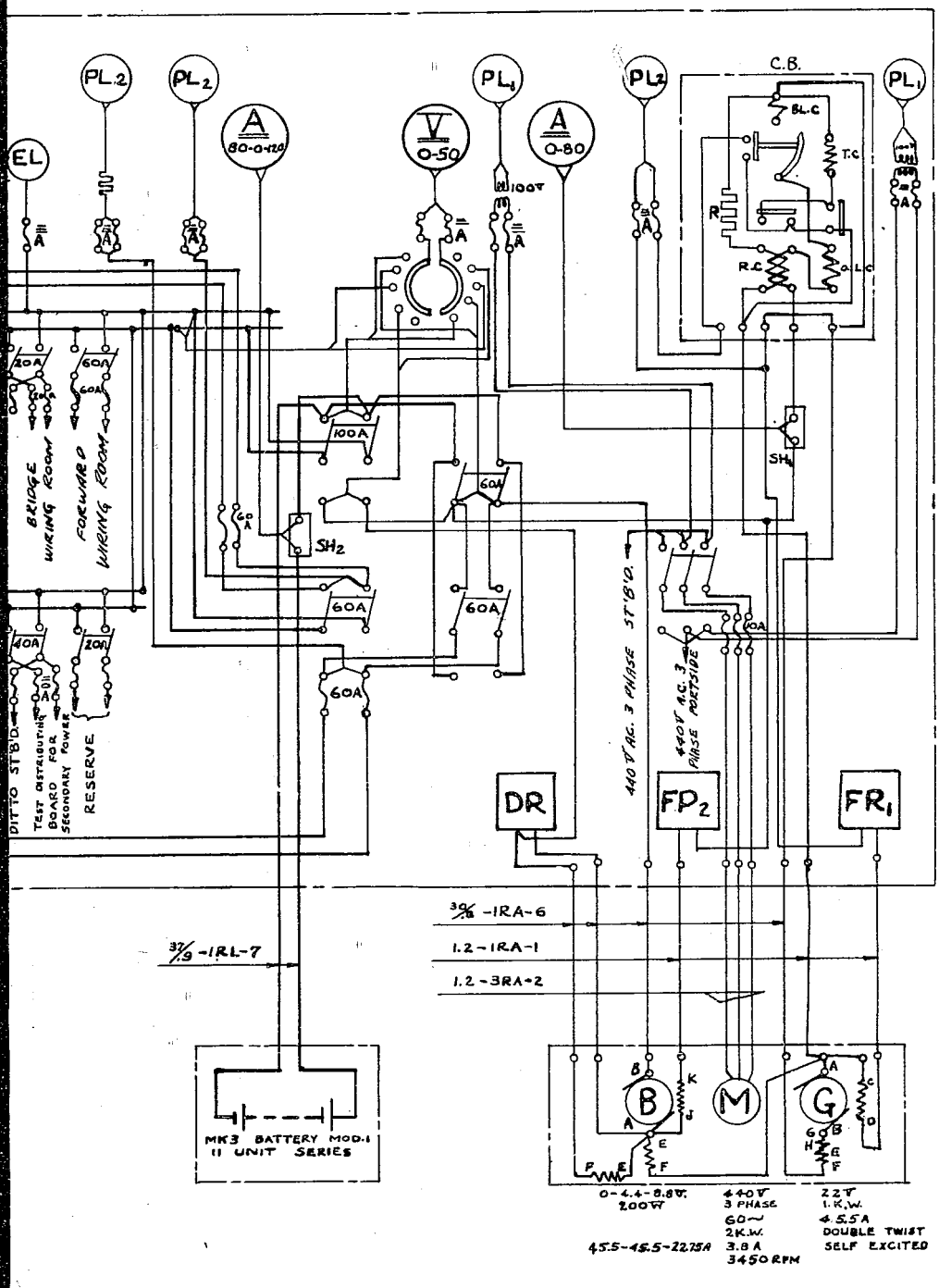

DISTRIBUTION SWITCHBOARDS

a. Secondary System for Selsyns

Table I indicates the power sources for this system. In D.C. vessels the supply is either from motor generators or from generators driven by the primary power plant turbo-generators. The generators are either 50 volt, 50 cycle or 230 volt, 50 cycle. Where 230 volt generators are used the voltage is stepped down to 50 volts for the selsyn systems. The practice was to install approximately one-half of the generators for this system forward of the machinery spaces and approximately one-half of the generators aft of the machinery spaces. In vessels with an A.C. primary power plant this system is supplied with 60 volts from the primary power plant through step-down transformers.

The distribution of selsyn power to the selsyn circuit is from I.C. switchboards. These I.C. switchboards may be used also for the distribution of the 20 volt D.C. telephone power or may be located in the same compartments as the I.C. switchboards for distribution of 20 volt D.C. telephone power. Except in destroyers and destroyer escorts, each distribution switchboard has a minimum of two power supplies. In A.C. vessels, two feeders from the primary plant are provided and in D.C. vessels power is supplied from a minimum of two generators.

b. 20 volt D.C. Secondary System

This system is essentially the same in vessels with either D.C. or A.C. primary power plants. Power supply for this system is either from motor generators or batteries. Table I lists the capacity of the motor generator and batteries installed for the system in various vessels. The standard practice was to install one motor generator and one bank of batteries for this system in destroyers. Two motor generators and two banks of batteries for this system were installed in larger vessels. In MATSU class destroyer escorts batteries only were installed, these batteries being charged from the 100 volt D.C. reserve power system. In HARUTSUKI, a late TERUTSUKI class destroyer, a second 20 A.H. battery was installed making a total of two banks of batteries for this system. The 20 A.H. battery was charged from the 100 volt D.C. reserve power system. Figures 12 and 13 show a typical 20 volt system for a destroyer and for a cruiser. It was standard practice to provide only one primary power supply for these motor generators in destroyers and two power supplies in larger vessels with power source selection at the control and distribution switchboard for the motor generator.

The generator and distribution switchboard shown in Figure 13 are typical for the control of the motor generator and charging of the battery for this system. Each motor generator consists of motor, a 22 volt D.C. generator and a booster generator. Switching is provided on the switchboard so that the battery may be connected to feed the distribution bus, the 22 volt generator connected to feed the distribution bus, or the 22 volt generator connected to feed the distribution bus and to charge the battery with the booster generator in series.

In vessels with two motor generators there are two bus ties between the 20 volt D.C. switchboards, one running on the port side and one on the starboard side of the vessel. The switching at this switchboard is arranged so that either end of one bus tie may be connected to the distribution bus, the battery or to the 22 volt generator and booster generator in series. This arrangement permits supplying the distribution bus from the remote distribution bus, supplying the distribution bus from the remote battery or the charging of the

batteries from the remote generator and booster. Switching at the switchboard permits the connecting of the other bus tie only to the distribution bus at each switchboard. This permits the feeding of either distribution bus. It will be noted that the switching arrangement at the switchboards will permit the connection of the generators in parallel. However, it is not intended that the generators should be operated in parallel and meters are not installed to read bus tie voltage or current.

In destroyers, the practice was to install the motor generator for this system and its control board in one of the engine rooms. In destroyers with the entire primary plant in one engine room, it was standard practice to install the motor generator and its switchboard in the other engine room. The battery is located in a battery compartment aft of the machinery spaces.

In vessels larger than destroyers, one motor generator is installed forward and one motor generator aft of the machinery spaces. These motor generators and their associated switchboard are installed in the vicinity of the forward and after control boards.

Distribution from the control and distribution switchboard for this system is through fused switches to I.C. distribution switchboards. I.C. distribution switchboards as a rule have 20 volt D.C. buses and 60 volt or 50 volt A.C. buses for selsyn supply. However, in some vessels the selsyn distribution buses and 20 volt D.C. distribution buses are on separate distribution switchboards located in the same compartment.

c. 88 volt D.C. System for Searchlights and Welding

Table I lists the searchlight motor generators installed in various Japanese vessels. It was standard practice to have one motor generator for arc supply for each large size searchlight installed. Each motor generator may be connected to supply the arc on only one searchlight, and there is only one source of primary power to each searchlight motor generator. Switching is provided at the control panel for each of these motor generators so that the motor generator may be connected to an outlet for welding. There is no welding distribution system other than one welding outlet for each motor generator, all further connections being made with portable cable.

In all vessels with an A.C. primary power plant and a 100 volt D.C. reserve power system, the field of the searchlight is arranged so that it may be reconnected to give a 105 volt stabilized output. These motor generators are located in the same space as the 105 volt D.C. reserve power motor generators and the output of the searchlight motor generator is controlled and distributed from the reverse power switchboard. The switching on the switchboard is such that the searchlight motor generator may be connected for 105 volt output and connected to supply the 100 volt reserve power distribution bus. The searchlight motor generator is not intended for charging the reserve power batteries or operation in parallel with the reserve power motor generators. In destroyers, the switching arrangement at the reserve power switchboard also permits the connecting of the searchlight motor generator at 105 volts D.C. to supply power for the pumps on an alongside tanker. Figures 14 and 15 show typical arrangements of searchlight motor generators with respect to the 100 volt reserve power system in vessels with an A.C. primary power plant.

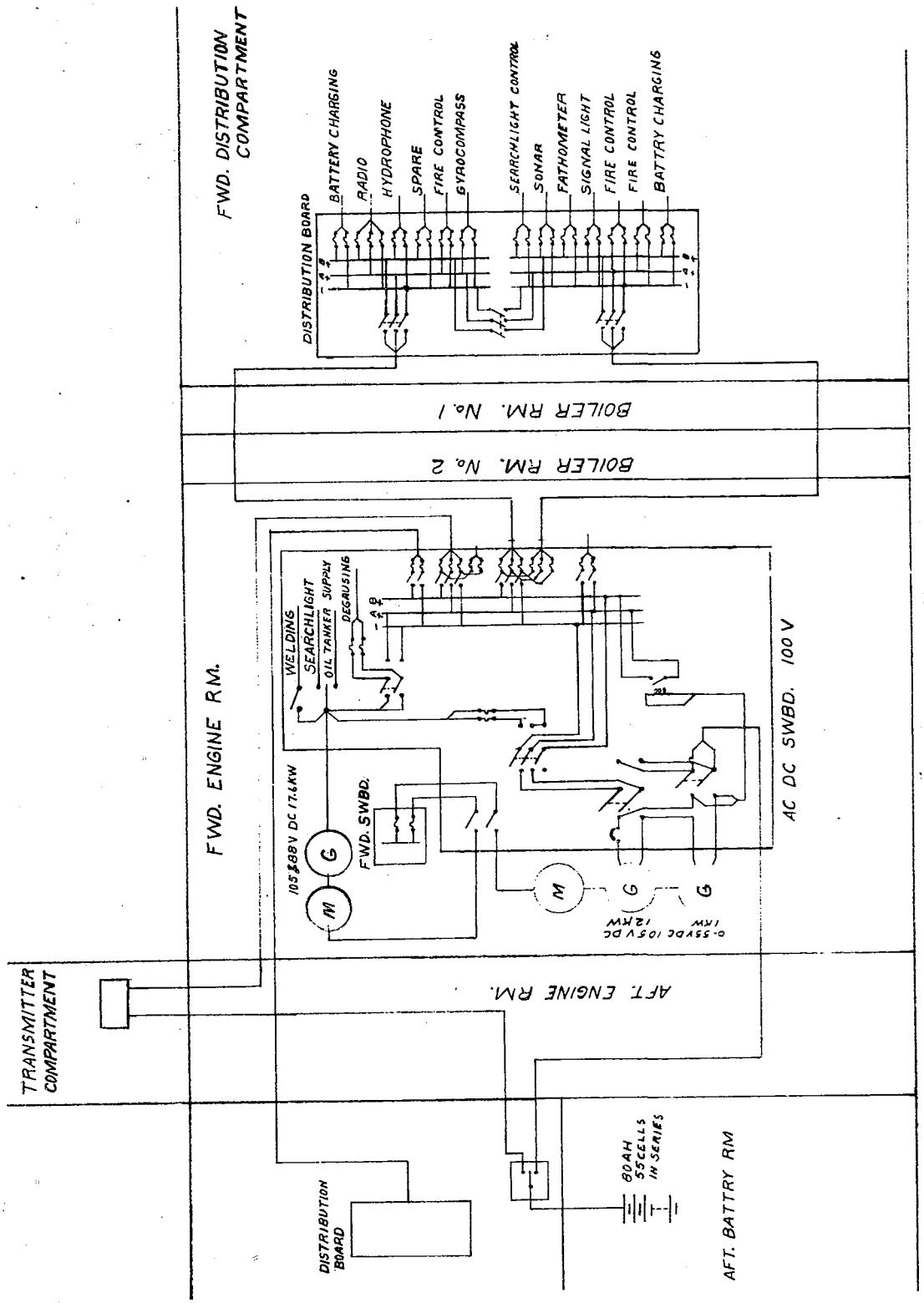

Figure 14
DD HARUTSUKI (TERUTSUKI CLASS)
Secondary Power System 100V D.C.

S-01-5

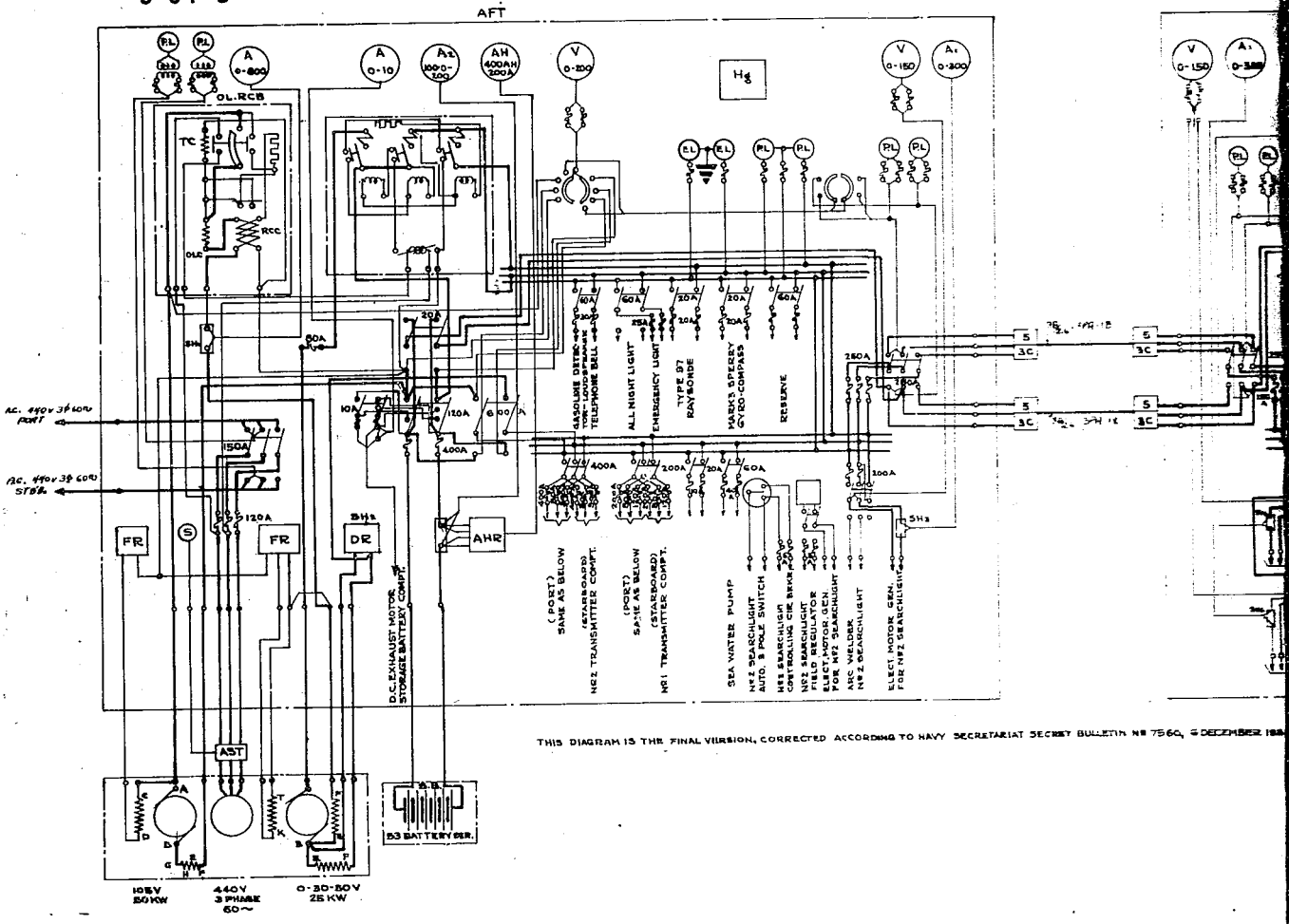

THIS DIAGRAM IS THE FINAL VERSION, CORRECTED ACCORDING TO NAVY SECRETARIAT SECRET BULLETIN No 7560, 6 DECEMBER 194

Figure 15
CL OYODO
Plan Showing Reserve Power 100V
Generator and Distribution Switc

RESTRICTED

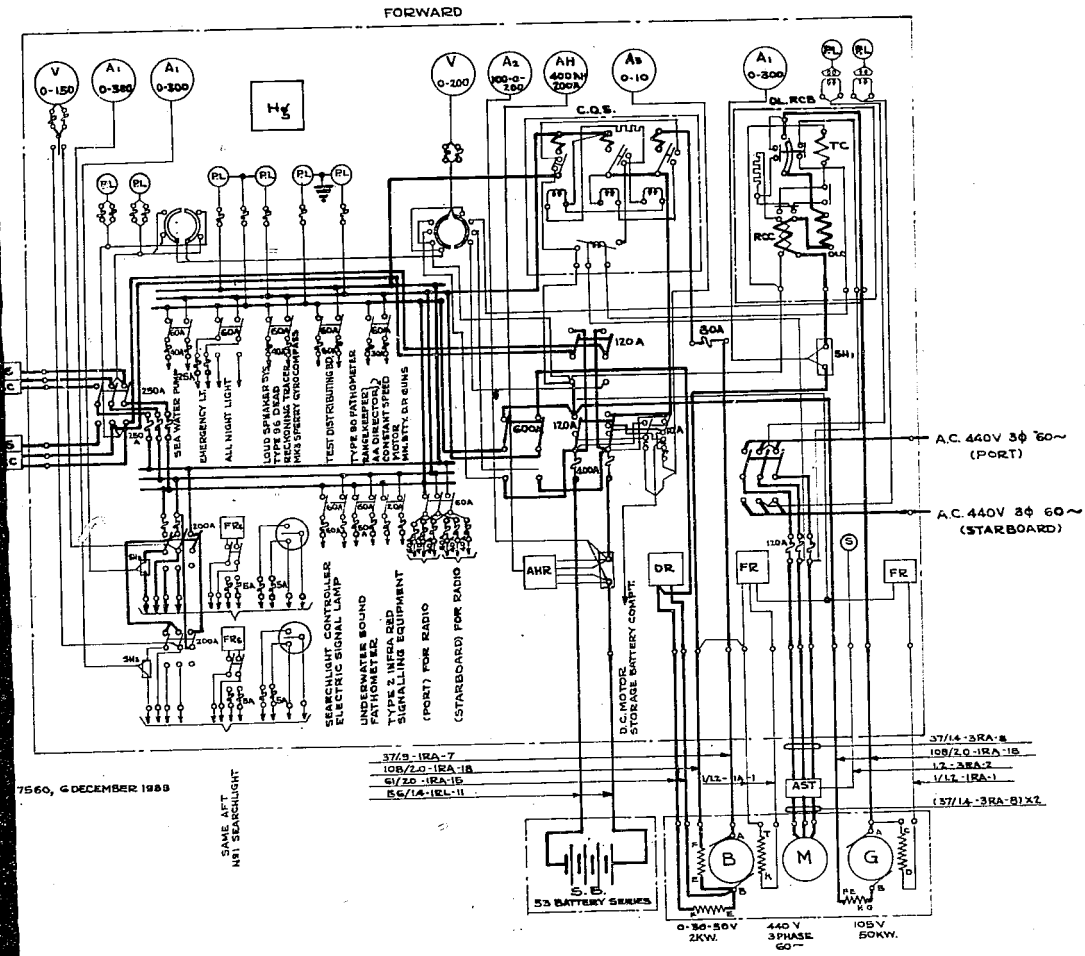

SYM	DESCRIPTION	QUAN.
V	D.C. VOLTMETER 0-200V / 0-150V	1 / 2
SH1, SH2	SHUNTS	1 / 8
A3	SAME AS BELOW 0-10A	2
A1, A2	SAME AS BELOW 100-0-200A	2
AH	D.C. AMMETER 0-600A / 0-300A	2 / 3
PL	PILOT LIGHT B TYPE BULB	12
EL	DETECTOR LAMP B TYPE & CP BULB	4
Hg	HYDROGEN TESTER MODEL 2 - 2 ATTACHED	2
FR's	FIELD RHEOSTAT	3
DL RCB	CONTROLLING CIRCUIT BREAKER	3
S.B.	MARK III STORAGE BATTERY MODEL 1	106
SH1	SHUNT	2
AHR	RELAY	2
AH	AMP-HOUR METER MODEL 3 FOR DISTRIBUTING BOARD	2
S	CONTROLLING CIRCUIT BREAKER FOR BELOW	2
AST	AUTOMATIC ACTUATOR BULKHEAD MODEL	2
DR	SHUNT REGULATOR	2
FR	FIELD REGULATOR	4
COS	AUTOMATIC SWITCH	2
DL RCB	AUTO. CIRCUIT BREAKER	2
B M G	ELECTRIC MOTOR D.C. GENERATOR	2

7560, 6 DECEMBER 1939

SAME AFT. AS STARBOARD

15
DO
Power 100V D.C.
ution Switchboard

5. Reserve Power System

The reserve power system is the nearest approach to an emergency power system installed in Japanese naval vessels. The reserve power in all cases is battery power. Table I contains a tabulation of the batteries and motor generators installed for reserve power in various Japanese vessels. It is understood from the Japanese Navy Ministry that they had experimented with automatically started diesel generators such as are installed in U. S. naval vessels, but that they never developed satisfactory control equipment for naval installations. Reserve power is used for only a limited amount of equipment as follows:

Steering in vessels larger than destroyers
Limited amount of radio equipment
Certain fire control equipment
Gyro compass
Signal and navigation lights
Limited amount of reserve lighting
Fire pumps (limited number)

Although not designated as such by the Japanese, the 20 volt secondary system might be considered as a reserve power system since all equipment supplied from that system can be fed from either motor generators or batteries.

The reserve power system may be divided into two parts: that used for steering and the general reserve power system. There are two different types of general reserve power systems: 220 volt systems installed in vessels with a 225 volt D.C. primary power plant and 100 volt systems installed in vessels with A.C. primary power plants.

a. 220 volt D.C. Reserve Power System

For this system there is, as a rule, a forward bank of batteries and an after bank of batteries. The battery charging control and reserve power distribution is from a switchboard located in the same space as the main control board for the primary plant and a switchboard located in the same space as the secondary control board for the primary power plant. The forward reserve power plant supplies reserve power loads forward and the after reserve power plant supplies reserve power loads aft. In some cases the transfer from primary power to reserve is at the load and in others it is at the reserve power switchboard. Lighting is always transferred to reserve power at the reserve power switchboard. The reserve power batteries are charged from the 230 volt line with a booster generator in series.

b. 100 volt Reserve Power System

Figure 14 shows a typical 100 volt reserve power system in a destroyer and Figure 15 shows a typical 100 volt reserve power system in a cruiser. In destroyers and destroyer escorts there is only one reserve power switchboard motor generator, and battery. In destroyers the reserve power switchboard and motor generator are installed in one of the engine rooms and the reserve power battery is installed in a compartment aft of the machinery spaces. In larger vessels there are two reserve power switchboards, each with its associated motor generators and battery. One of these switchboards is installed, as a rule, in the space containing the secondary control board. The motor generator and battery for each switchboard are installed in the adjacent motor generator compartment and the adjacent battery compartment. It was standard practice to provide only one primary power supply for the reserve power motor generators in destroyers and two sources of primary power for these motor generators in larger vessels.

Although this system is a reserve power system and has been compared to the U. S. Navy's emergency power system, it is really a secondary system in that no equipment supplied from this system is supplied directly from the primary system with the exception of lighting. In the case of lighting, the reserve lighting circuits may be connected to either the 100 volt D.C. reserve system or the 100 volt A.C. lighting system by means of a transfer switch located on the 100 volt D.C. reserve power switchboard. Therefore, the reserve power switchboard feeds only loads that are designed for 100 volt D.C. operations and it is not used as an additional power supply for equipment fed from the primary power plant. In addition to supplying power for vital functions, this system also is used to supply non-vital functions which are inherently more easily accomplished from a 100 volt D.C. power source, such as battery charging. The reserve power switchboard has a double bus arrangement with one bus connected so that it is only energized from the motor generators and the other so that it may be energized from either the motor generator or the battery. The vital loads, or so called reserve power loads, are fed from the bus that may be energized by the battery, while the non-vital loads are fed from the bus that is energized only from the motor generators. For the sake of simplicity these two buses will be called the vital bus and the general bus. Actually, as physically installed, the vital bus and the general bus have a common negative bus and separate positive buses. The vital positive bus is designated as A+ and the general positive bus as B+ .

Each motor generator for the 100 volt system consists of a 105 volt D.C. generator and a booster generator. The connections on the reserve power system and distribution switchboards are essentially the same as those on the control and distribution switchboard for the 20 volt secondary system described in sub-section I-A-4-b of this report. That is, switching is provided on the switchboard so that the battery may be connected to feed the vital distribution bus, the 105 volt generator may be connected to feed the vital and the general distribution buses, or the 105 volt generator connected to feed the vital and general distribution buses and to charge the battery with the booster generator in series. In addition to the reserve power generators, the searchlight motor generators may be used to supply power to these switchboards as described in section I-A-3-c of this report.

In vessels with two reserve power motor generators there are two bus ties between the reserve power control switchboard, one running on the port side and one running on the starboard side of the vessel. Each bus tie consists of three conductors, one for the common negative bus, one for the positive vital bus and one for the positive general bus. The switching at each switchboard is arranged so that either end of one bus tie may be connected to both the general and vital bus, to the battery (conductor for common negative bus and for positive vital bus only), or to 105 volt generator and booster generator in series (cable for common negative bus and for positive vital bus only). This arrangement permits supplying the distribution buses of either switchboard from the remote distribution buses, the vital bus of either switchboard from the remote battery, or the charging of either battery from the remote generator and booster in series. Switching at each switchboard permits the connection of the other bus tie only to the distribution buses of each switchboard. This permits the feeding of the distribution buses on either switchboard from the remote distribution buses. It will be noted that this bus tie arrangement permits the operation of the generators feeding the distribution buses in parallel. However, it was not the practice of the Japanese to operate motor generators for this system in parallel.

c. Reserve Power for Steering

Reserve power is provided for steering in cruisers, aircraft carriers and battleships. This reserve power is from a battery located in a battery compartment adjacent to the steering compartment. In some vessels this battery compartment is within the steering armored box while on others it is outside of the armored box. In D.C. vessels, 220 volt batteries are installed for reserve steering power supply and in 440 volt A.C. vessels the reserve battery supply for steering is 100 volts.

In D.C. vessels the steering batteries are charged from the after reserve power booster generator, and the batteries feed the steering motors directly. In A.C. vessels the batteries are charged by an A.C. - D.C. motor generator which is reversed and uses a D.C. - A.C. motor generator to supply power from the battery to the A.C. steering motors. This motor generator is installed within the steering armored box. Figure 11 shows this installation for a typical vessel with an A.C. primary power plant.

A switchboard is installed within the armored steering box for selection of either of the two ships service power supplies or the reserve power supply for the steering motors. This switchboard also controls the charging of the battery. The Japanese standard practice was to install manual transfer switches for selection of power supply to the steering motors. However, an automatic transfer switch was installed for the selection of primary power for the steering motors in TAIHO (CV).

The provisions of batteries for reserve power supply to steering is probably more reliable than the U. S. naval practice of providing power from an emergency diesel generator because of the distance between the steering compartment and the emergency diesel generator. However, the battery is good only for a temporary power supply because of its limited capacity. The Navy Ministry stated that the batteries will operate the steering motors from one to three hours depending upon the operation of the vessel. The Japanese considered the battery reserve power for steering to be only a stop-gap for use in case of damage until emergency power (casualty power) connections could be made to supply the steering motors.

6. Emergency Power

The emergency power system as installed in Japanese naval vessels is similar to the casualty power system in U. S. naval vessels and is the primary means of damage control. This emergency system is installed only in cruisers, aircraft carriers and battleships. The installation consists of permanently installed risers and bulkhead terminals to which portable cable may be connected for power supply to equipment. Quite often the permanently installed feeders to equipment not required under battle conditions are connected to their load through a transfer switch so that the feeder cable may be used to feed its intended load or be transferred to feed emergency power terminals. Risers from the switchboard or ring mains are connected to circuit breakers and run to the third deck. There are also terminals installed in the generator room and permanently connected to the feeder cable between the generator circuit breaker and the switchboard or ring main.

In all installations inspected the fittings are simply terminals in enclosed boxes which have a hole in the bottom for bringing in the cable. The terminals have insulated thumb nuts and the flexible cables have lugs soldered to the ends. The lugs are placed on the terminals and the nuts are tightened by hand. The bulkhead terminals go directly through the

bulkhead in an insulated bushing. Portable cable rated from 20 amperes to 180 amperes is carried aboard. The following is a list of the portable cable for emergency power installed in KATSURAGI. This cable is all single conductor with a cotton braid.

Table III
PORTABLE CABLE FOR EMERGENCY POWER INSTALLED IN KATSURAGI

Cables	Length of Cable (m)	Current Ratings (Amp)	Strands per Conductor	Diam. of Strands (mm)
8	50	20	70	0.26
4	50	40	100	0.32.
4	25	70	252	0.32
8	20	120	513	0.32
20	20	180	513	0.45

The cable was stowed in coils on the deck through the vessel. The Navy Ministry stated that no attempt was made to stow this cable in the space where it might be used because it was considered that, if this practice was followed, the portable cable might be destroyed along with the permanently installed cable which it was intended to replace. Further, there was not sufficient cable stowed aboard a vessel to connect all emergency power runs at the same time.

The connections and fittings were provided so that emergency power could be supplied all auxiliaries and equipment required in battle; that is, all auxiliaries used for combat and those necessary to maneuver the vessel. In addition emergency power connections were provided for lighting.

7. Electrical Installation Practices

This sub-section covers the cables, methods of support and installation of electrical fixtures and fittings. Japanese practices were inferior to those of the U. S. Navy. Very little consideration was given to shock in the mounting and supporting of equipment.

a. Cable

The Japanese used a number of types of cables for shipboard installation. These included, (1) rubber insulated with steel braid armor (2) rubber insulated, lead sheathed with steel braid armor, (3) rubber insulated with a fire resistant fiber over the rubber and steel braided armor, (4) rubber insulated with a cotton braid in place of armor for flexible cable installation, and (5) oil impregnated, paper insulated lead, sheathed with steel wire armor for ring main cable and 601 conductor communications cable. Specifications for Japanese wire cable have been forwarded to the Bureau of Ships as NavTechJap Documents Number ND22-2011 and ND22-2012. Samples of the different types of cable used by the Japanese Navy were forwarded to the Ordnance Investigation Laboratory, Indianhead, Maryland and assigned NavTechJap Equipment Number JE22-2020.

b. Methods of Supporting Cable

All cables except the ring main cable and 601 conductor cable are grouped bunched together and not run in tiers as is the practice in U. S. naval vessels. The ring main cables and 601 conductor

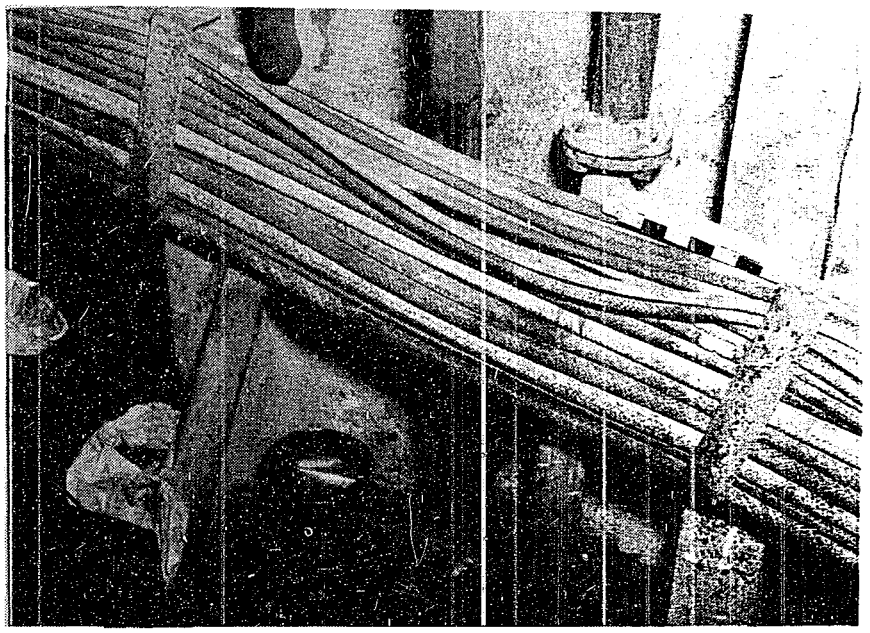

Figure 16
DE OTAKI
Wireways

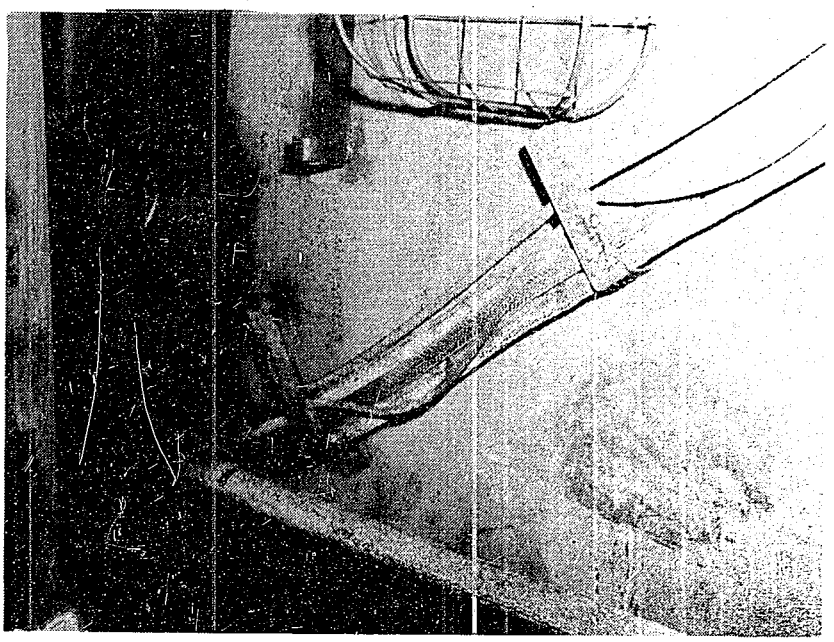

Figure 17
DE OTAKI
Wireways

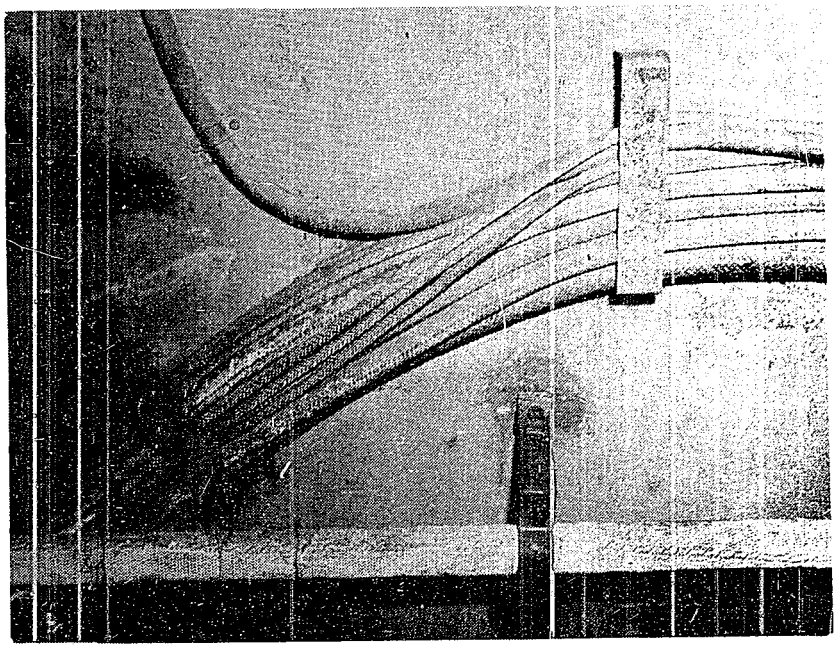

Figure 18
DE OTAKI
Wireways

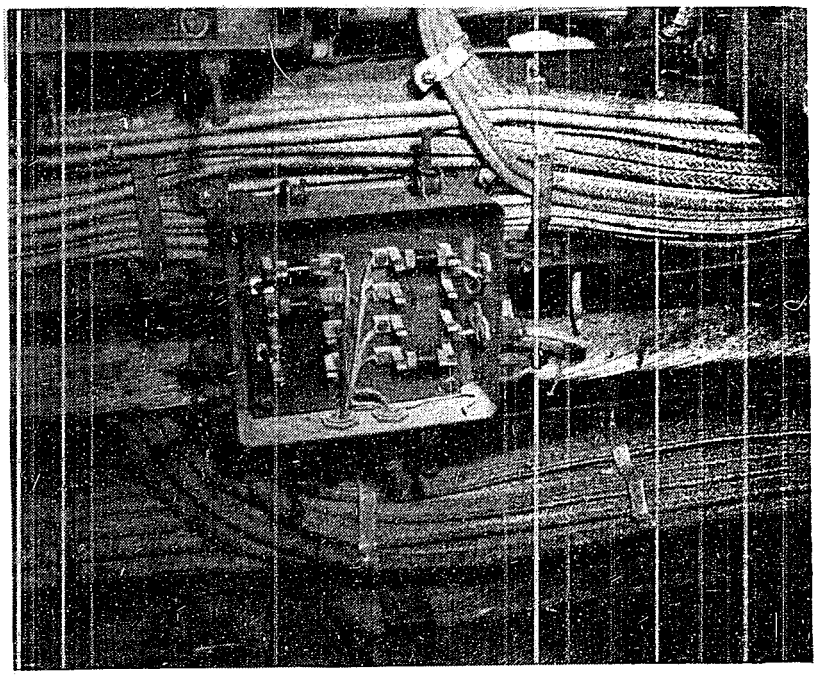

Figure 19
CV KATSURAGI
Wireway on Inboard Side
of Ring Main Wiring Tunnel Showing Ring Main Cable
and 601 Conductor IC Cable

communications cables are supported individually from the bulkheads in a manner similar to the U. S. practice for the support of small pipes.

Two methods were used by the Japanese for the support of the cable groups in wireways. The first method is shown in Figures 16, 17, and 18 and is limited to wireways in destroyer and destroyer escorts.

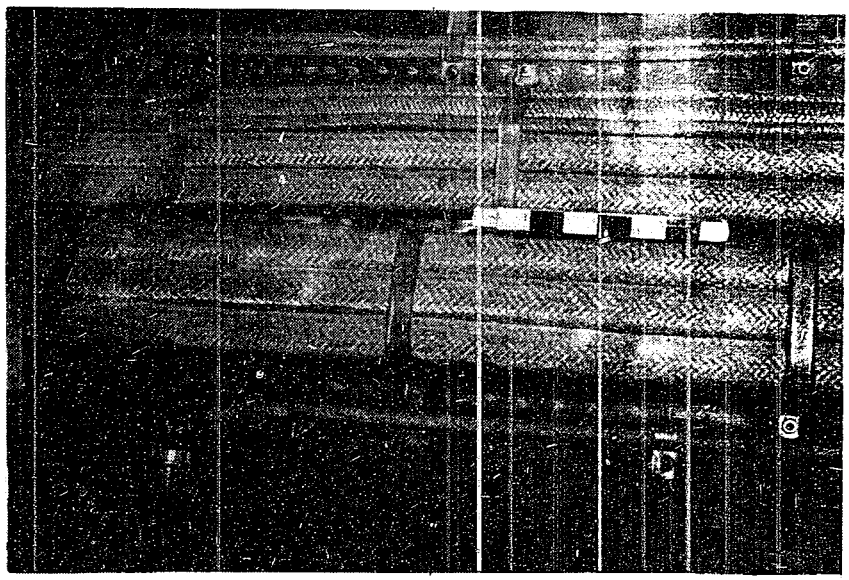

Figure 20
CV KATSURAGI
Wireways on Outboard Side
of Ring Main Wiring Tunnel

In this method the wireway supports consist of U-shaped steel forms with both ends welded to the bulkheads. The cable is then pulled through the U-shaped supports. In the installation observed it appeared that no effort had been made to make the cable carrying of the supports comparable to the cable to be installed. Some supports observed were filled to capacity with cable while others were no more than one-quarter filled with cable.

The second method of supporting wireways is shown in Figures 6, 8, 19 and 21. On smooth decks and bulkheads, except those subject to gun blasts, the cable is supported by this method secured directly to the bulkhead or deck. On decks and bulkheads subject to gun blast, the cable is strapped by this method to brackets which are welded to the bulkhead or deck and have surfaces parallel to the bulkhead or deck a minimum of one inch from the deck or bulkhead to which the cables are strapped. On decks or bulkheads where there are stiffeners or beams and lightning holes cannot be used, brackets similar to those described above for decks or bulkheads subject to gun blast are installed in order to give a straight wiring over the interfering stiffeners. The groups of cables in this method are strapped to the deck, bulkhead or brackets described above by studs which are welded to the bulkheads or bolts which go through the bracket. These straps are spaced on 11 inch centers. The size of the straps used is dependent upon the cross sectional area of the cable supported. Strap dimensions are shown in Figure 21.

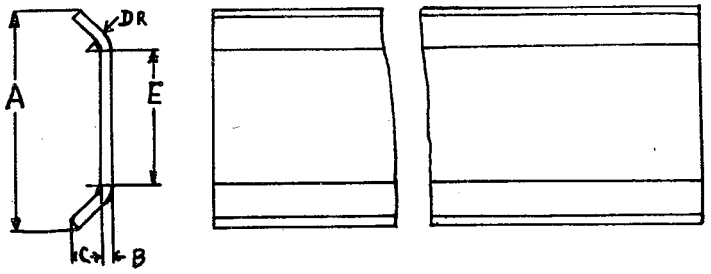

Type \ Symbol		A	B	C	D	E
Mk 1	Brass	15	0·8	1·0	1·5	13·4
	Soft steel	15	0·7	1·0	1·5	13·4
Mk 2	Brass	20	0·8	1·0	1·5	18·4
	Soft steel	20	0·7	1·0	1·5	18·4
Mk 3	Brass	20	1·2	1·3	2·0	17·6
	Soft steel	20	1·0	1·3	2·0	17·6
Mk 4	Brass	20	1·5	1·5	2·5	17·0
	Soft steel	20	1·4	1·3	2·5	17·0
Mk 5	Brass	25	2·2	2·0	3·0	20·6
	Soft steel	25	2·0	2·0	3·0	20·6

1.Soft steel straps are made of SM-41N with cadmium plating.

2.Brass straps are made of Bs P(70)B.

3.Brass Bs P(70)B is 69-72% Cu.,Impurities 1%,Remainder 2%: Medium Hard;Res.to stretching 38Kg/mm^2;Stretch in % 30.

4.Spacing of straps in wireway 11 inches

Standards for use of Cable Straps

Type of Cable Strap	Height of Collected Cables	Width of Collected Cables
Mk 1	< 10 mm	< 35 mm
Mk 2	< 30	< 70
Mk 3	< 40	< 120
Mk 4	< 40	< 150
Mk 5	< 50	< 200

Figure 21
STANDARD CABLE STRAP DIMENSIONS

In grouping the cables together as described above, no consideration is given to a grouping factor when rating the current carrying capacity of cable. Further, no special methods are used for supporting cables on armored decks, bulkheads or in armored tubes. The only protection provided cables other than described above is that all cable runs through magazines are in conduits. It is interesting to note that no special protection from hot smoke gases is given the cables running up the main mast. Yet the Japanese claim that they experienced no trouble with failure of this cable. This probably is due to the fact that cable with a lead sheath is used for this purpose.

c. Cable Trunks and Cable Routing

In the routing of cables in Japanese vessels no attempt is made to provide vertical separation, all separation of cable runs being horizontal. Ring main wiring tunnels are installed as described in Section I-A-2-a of this report. The athwartship watertight bulkheads are carried through the wiring tunnels and the cables are carried through these watertight bulkheads with stuffing boxes or stuffing tubes. In large vessels with in-line switchboards a port and starboard wiring tunnel is installed similar to the ring main tunnel. TAIHO is an example of a vessel with such an installation. The fore and aft wiring tunnels and ring main tunnels always are installed within the armored box on armored vessels. However, these wiring tunnels may be installed above, at, or below the design waterline. In destroyers, light cruisers and aircraft carriers with in-line switchboards there are no longitudinal wiring tunnels. In these vessels the main wireways are run on the bulkheads of the machinery spaces. The Japanese have no armored tubes except to the steering armored box and to the bridge on armored vessels.

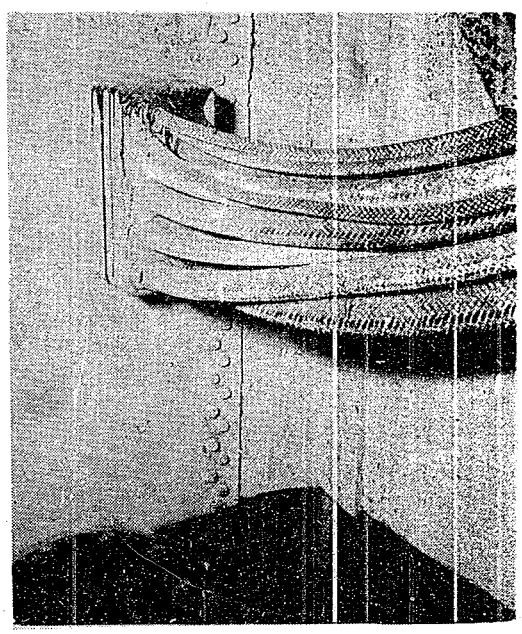

Figure 22
DE OTAKI
Cable Stuffing Box
for Passing a Number of Cable.
Through a Watertight Bulkhead

d. Cable Stuffing Boxes and Stuffing Tubes

Two methods are employed for running cables through bulkheads in Japanese naval vessels: stuffing tubes and community stuffing boxes. The community stuffing box is used in all cases where a group of cables go through a bulkhead or deck. Figure 22 is a photograph of a community stuffing box installed in OTAKE.

The community stuffing box is a steel box welded, riveted or bolted to the bulkhead. Holes are cut through the bulkhead and the surface of the box parallel to the bulkhead and the cable is pulled through the holes in the bulkhead and box. These holes are made somewhat larger than the cable to be pulled through them. In order to make the box tight, the space in the holes around the cable is filled by wrapping with hemp fibers and putty. Heated liquid bitumastic is then poured into the box through a hole at the top and allowed to solidify. A sample of the bitumastic material used for this purpose has been forwarded to the Bureau of Ships under NavTechJap Equipment Number JE50-1395.

Figure 23 covers standard dimensions for the community stuffer boxes as installed in Japanese vessels.

Stuffing tubes are either welded, bolted, or riveted to the bulkhead or fastened to the bulkhead with a nut around the portion of the tube going through the bulkhead similar to the method indicated in Figure 8 for terminal tubes. The packing material used for stuffing tubes is hemp fiber and putty which has red lead mixed with it for rust preventation. Figures 24 and 25 cover standard dimensions of bulkhead and deck stuffing tubes.

e. Cable Sealing

The Japanese neither sealed cable ends to prevent water from passing longitudinally through the cable from one compartment to another nor did they use longitudinally watertight cable. The passing of water longitudinally was, however, recognized as a problem.

At the close of hostilities the Japanese were attempting to develop a method for sealing cable ends but had no success in developing a practical method. Unsuccessful attempts also had been made to manufacture cable which would be longitudinally watertight. Representatives of the FURUKAWA Electric Company stated that that company tried to manufacture this cable in 1944 without success. Two methods were tried for making the stranded cable watertight. In the first method, rubber tape was inserted at the time for wire stranding and vulcanized after the rubber cover had been placed around the conductor. In the second method, latex was inserted between the strands.

f. Grounding Cable in Radio Spaces

In radio spaces the cables are grounded every 1 1/2 meters. The cables are grounded by a wire which is soldered to the armor of each cable in a wireway and then to the bulkhead or deck. All flexible cables in radio spaces are armored and the armor grounded.

g. Flexible Cable to Rotating Structures

Flexible cable installed in structures is rubber with a cotton braid protection. There are no special installation practices for flexible cables unless there are ammunition hoists in the rotating structure that limit the space for the flexible cable. In installations where there are no ammunition hoists, the cable is allowed to hang freely between the fixed structure and the rotating structure with suffi-

STUFFING BOX FOR GENERAL CABLES

SYMBOL	NAME	MATERIAL	QUANTITY	FACTORY CONCERN	WEIGHTS CALCULATED UNIT	WEIGHTS CALCULATED TOTAL	WEIGHTS ACTUAL UNIT	WEIGHTS ACTUAL TOTAL	NOTES
①	BOX & COVER	SN 44 N	1 SET						
②	BOX COVER CLAMP SCREW	SM 44 N							QUANTITIES BASED ON SEPARATE LIST
③	FILLING HOLE FIXTURE	S.G.P.							
④	" " " COVER	ST 30 B							
⑤	ROUND HEAD BOLT (PIN)	SM 44 N (SUS 41 N)							QUANTITY BASED ON SEPARATE LIST
⑥	CLEANING HOLE CLAMP SCREW	SM 44 N							
⑦	" " COVER	SM 44 N							
⑧	GASKET	SAIL CLOTH							ON THOSE WITH FLANGE
○									

FUSES

B	L	H
65	90	70
75	110	70
90	125	80
100	150	80
120	180	80
150	220	80

SIZE GENERALLY SAME AS KANSEI HOMBU BUT LIDS ARE ONE PIECE.

STUFFING BOX FOR GENERAL CABLES, TYPE & DIMENSIONS (KANSEI HOMBU)

BOX DIMENSIONS AND No. OF ASSECORY SCREWS

SYMBOL	DIMENSIONS B	DIMENSIONS L	NUMBER ②	NUMBER ⑤	NUMBER ⑥	
MK.1	80	120	6	10	8	
MK.2	120	180	6	12	8	
MK.3	150	220	10	14	8	
MK.4	180	300	10	20	8	
MK.5	200	360	12	22	8	

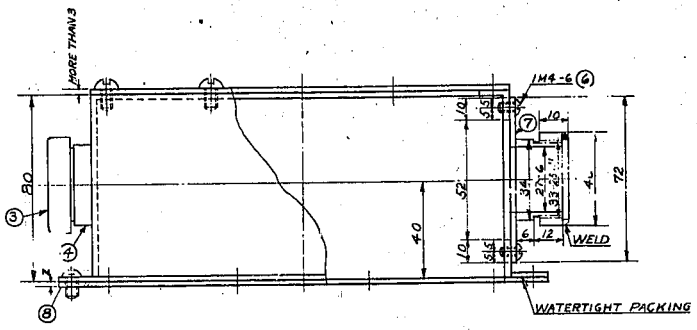

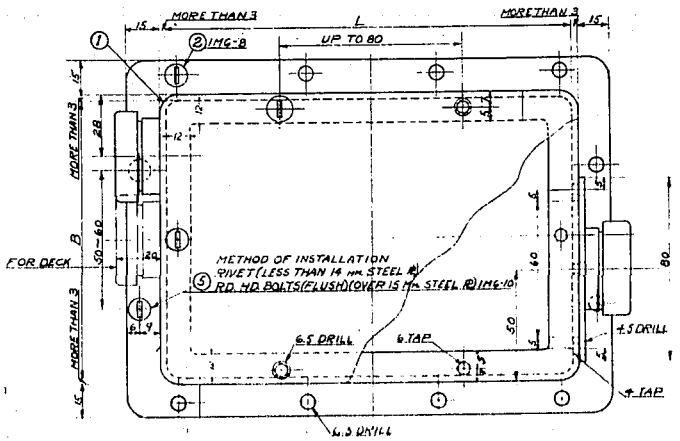

	FOR BULKHEADS		FOR DECKS (PLANS SHOW WHERE THERE IS A FLANGE (F))	
METHOD OF INSTALLATION	ATTACH BY WELDING BUT IN PLACES WHERE WELDING IS PROHIBITED USE A FLANGE AND ATTACH BY RIVETS.			
SIZE	OUTLINE SKETCH	EXIST. OF FLG.	OUTLINE SKETCH	EXIST. OF FLG.
MARK 1	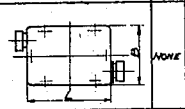	NONE	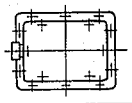	YES
MARK 2	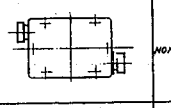	NONE	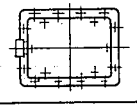	YES
MARK 3	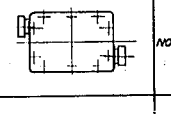	NONE	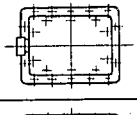	YES
MARK 4	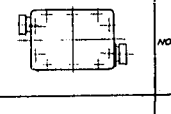	NONE	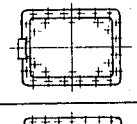	YES
MARK 5		NONE	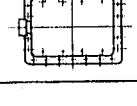	YES

Figure 23
DIMENSIONS FOR COMMUNITY CABLE STUFFING BOXES

cient slack to take care of the rotation of the device. In this case, no spacers or intermediate supports are provided. On guns or turrets with rotating hoists the latest practice is to fasten the cable to interlocked rotating cable supports. These are mounted concentric with the center of rotation of the turret, one above the other and interlocked so that the angle of rotation between adjacent rotating supports is limited to a fixed angle. The top rotating support is interlocked with the rotating structure of the turret so that the angle of rotation between the rotating structure and the top support is limited to the same angle as the limiting angle of rotation between adjacent rotating supports. Similarly, the lowest rotating support is interlocked with the fixed structure. The rotating supports are fixed in a horizontal plane. There also is a fixed cable support below the bottom rotating support and a cable support fixed to the rotating structure of the turret and located directly above the top rotating support. With the turret in the central position and all rotating supports set so that they have a maximum of independent rotation in either direction, the points at which a given cable is clamped to the supports are in a vertical line parallel to the center of rotation of the turret. At this position of the turret there is sufficient slack in the cable between each vertical point of support to permit each cable support to rotate the maximum relative angle without putting any stress on the cable. A set of rotating cable supports and the casting upon which these cable supports rotate has been forwarded to the Bureau of Ships under NavTechJap Equipment Number JE50-1396.

h. Marking of Cable

The Japanese did not give their cables any designation, nor were there any tags or markings on cables to designate their purpose.

It is understood that at one time color coding was used but that its use was discontinued. Distribution panels however had nameplates which listed the power supply and equipment supplied from the panel. The practice of not marking the cable and having the cables grouped in wireways made the repair of cables under damaged conditions very difficult. It is understood that the Japanese did not attempt to repair cables by damage control. Instead, they depended upon their emergency systems under damaged conditions.

i. Wiring Fixtures and Fittings

Distribution panels and wiring boxes installed in Japanese vessels are all of watertight construction and terminal tubes or stuffing boxes are used for all cable entrances. Enclosures are either cast or steel welded. It is understood from the Navy Ministry that all boxes were subjected to a water pressure test before installation and that those boxes which failed were installed in spaces above the flooding line not subject to spray. The gaskets used in most covers are oil-soaked cotton. The Japanese stated that they had found that rubber deteriorated due to heat and age. Terminal tubes were used for cable entrances to fittings as a standard practice; however, stuffing boxes similar to those used at bulkheads were observed on some enclosures. The Japanese stated that this method was used as a war expedient and was not considered the best installation. Terminal tubes are packed with hemp fiber and putty mixed with red lead, the same as stuffing tubes. Terminal tubes are gasketed and fastened to the boxes with nuts as indicated in Figure 8. Figures 26 and 27 show community stuffing boxes on distribution fittings for cable entrance. Sample lighting distribution boxes have been forwarded to the Ordnance Investigation Laboratory, Indianhead, Maryland, and assigned NavTechJap Equipment Number JE22-2021. Figure 28 gives the standard dimensions for terminal tubes.

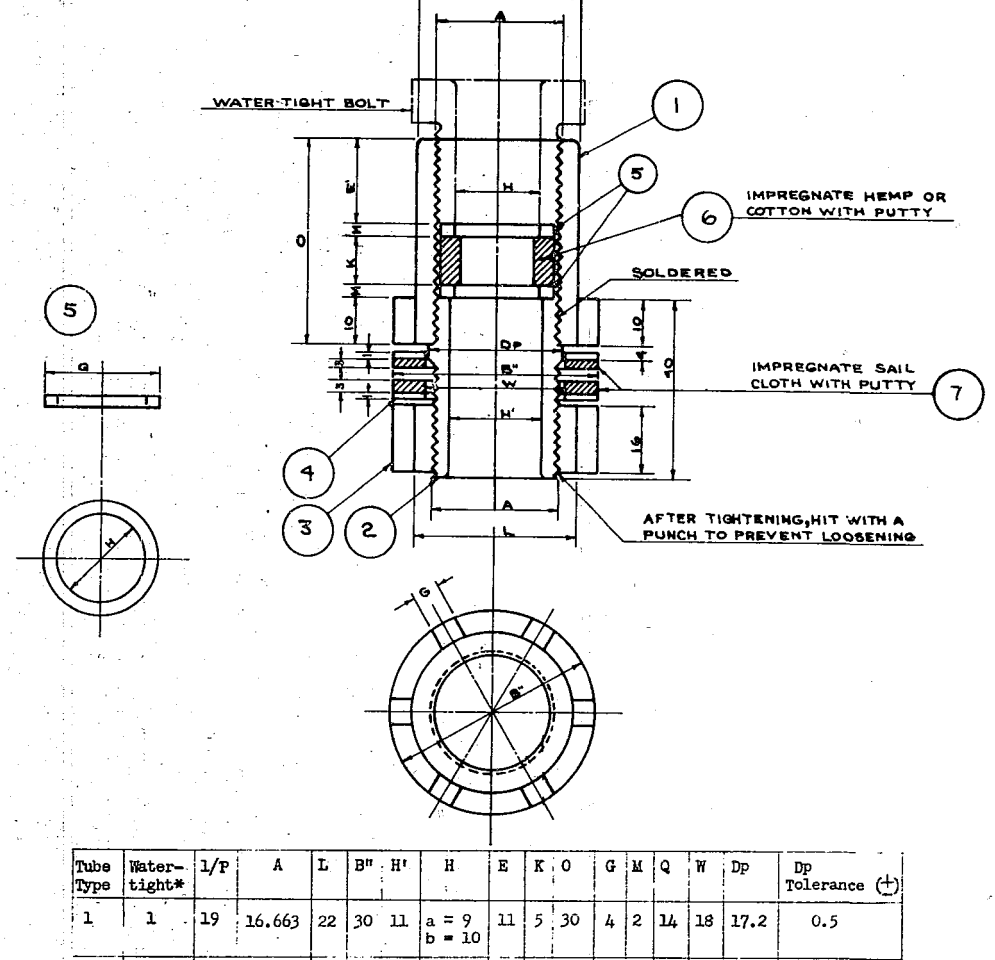

Tube Type	Water-tight*	l/P	A	L	B"	H'	H	E	K	O	G	M	Q	W	Dp	Dp Tolerance (±)
1	1	19	16.663	22	30	11	a = 9 b = 10	11	5	30	4	2	14	18	17.2	0.5
2	2	14	20.056	28	34	14	c = 11 a = 12 b = 14	13	5	32	5	2	17	23	22	0.5
3	3	14	26.442	34	44	18	a = 16 b = 18	14	6	34	6	2	23	30	27	0.5
4	4	14	30.202	38	48	22	a = 20 b = 22	15	7	36	6	2	27	33	31	0.5
5	5	11	33.250	42	52	26	a = 24 b = 26	16	7	39	7	3	29	36	34	0.5
6	6	11	41.912	50	60	32	a = 28 b = 30 c = 32	17	8	41	7	3	37	45	44	0.5
7	7	11	47.805	58	70	38	a = 34 b = 36 c = 38	18	8	42	8	3	43	52	49	0.5
8	8	11	53.748	65	78	44	a = 42 b = 46	18	9	43	8	3	49	53	55	0.55
9	9	11	59.616	70	82	48	48	20	10	46	10	3	55	65	61	0.62
10	10	11	65.712	75	88	54	54	20	12	48	10	3	61	70	67	0.68

*Both types

Figure 24
STANDARD DIMENSIONS
FOR BULKHEAD STUFFING TUBES FOR CABLE

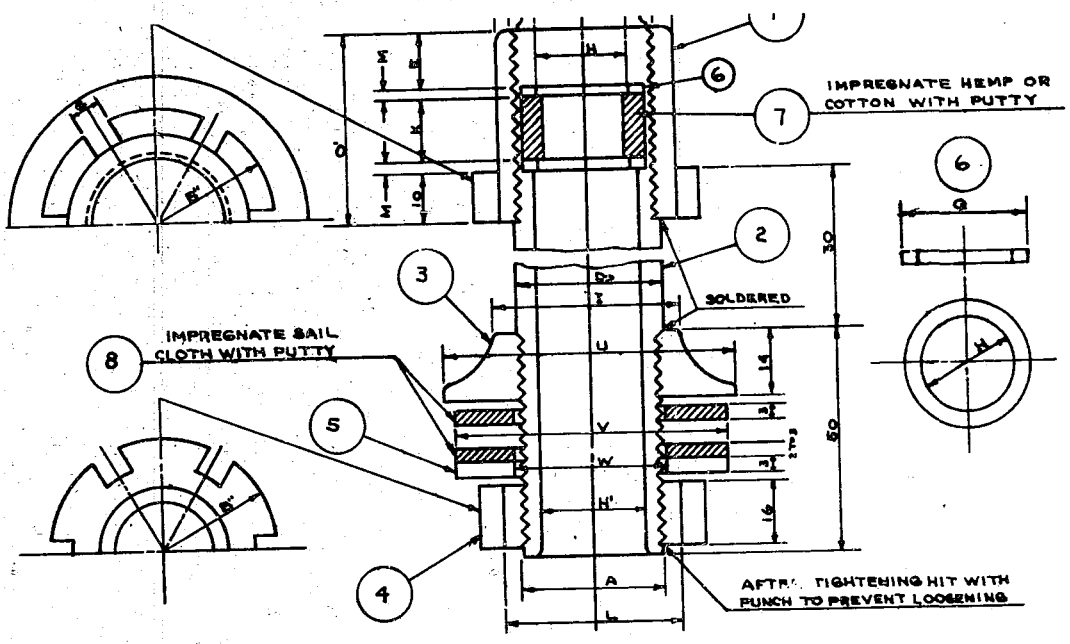

Tube Type	Water Bolt Type	1/P	A	L	B"	H"	H	E'	K	O	G	M	Q	I	U	V	W	Dp	Dp Tolerance (±)
1	1	19	16.663	22	30	11	a = 9 b = 10 c = 11	11	5	30	4	2	14	22	44	10	18	17.2	0.5
2	2	14	20.956	26	34	14	a = 12 b = 14	13	5	32	5	2	17	20	50	46	23	22	0.5
3	3	14	26.442	34	44	18	a = 15 b = 18	14	6	34	6	2	23	35	60	55	30	27	0.5
4	4	14	30.202	38	48	22	a = 20 b = 22	15	7	36	6	2	27	40	63	58	33	31	0.5
5	5	11	33.250	42	52	26	a = 24 b = 25	16	7	39	7	3	29	42	65	60	36	34	0.5
6	6	11	41.912	50	60	32	a = 28 b = 30 c = 32	17	8	41	7	3	37	52	72	68	45	44	0.5
7	7	11	47.865	58	70	38	a = 34 b = 35 c = 38	18	8	42	8	3	43	58	82	78	52	49	0.5
8	8	11	53.748	65	78	44	a = 42 b = 44	18	9	43	8	3	49	65	90	85	58	55	0.55
9	9	11	59.616	70	82	48	48	20	10	46	10	3	55	72	95	90	65	61	0.62
10	10	11	65.712	75	88	54	54	20	12	48	10	3	61	78	100	95	70	67	0.68

Figure 25
STANDARD DIMENSIONS
FOR DECK STUFFING TUBES FOR CABLE

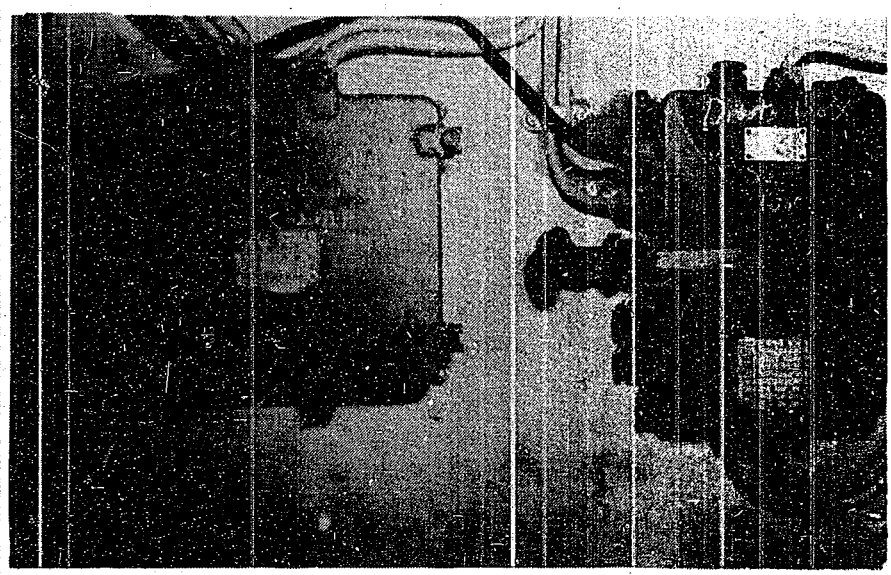

Figure 26
DE OTAKI
Two Watertight Boxes Side by Side,
One with Terminal Tubes for Cable Entrance
and One with Cable Stuffing Box

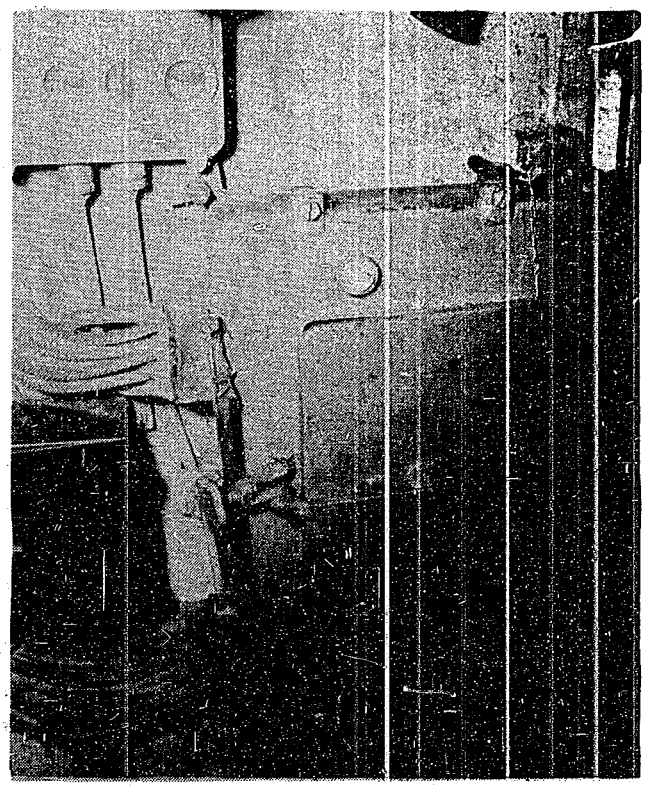

Figure 27
DE OTAKI
Distribution Box with Stuffing Box
for Cable Entrance

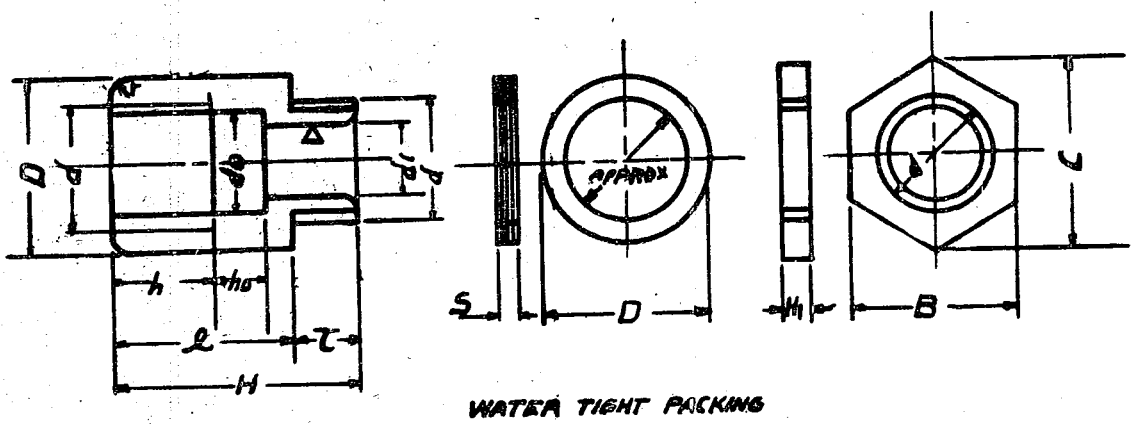

WATER TIGHT PACKING

BOX STUFFING TUBE MK I

No.	Thread Name	d	D	H	h	ho	l	t	di	r	S	B max	B min	C (approx)	Hi
1	Pipe 3/8	16.663	22	30	11	5	19	11	11	1.5	2	21	20.4	24.2	4
2	Pipe 1/2	20.956	28	33	13	6	22	11	14	2	2	26	25.4	30.0	4
3	Pipe 3/4	26.442	34	36	14	8	25	11	18	2	2	32	31.2	37.0	4
4	Pipe 7/8	30.202	38	38	15	9	27	11	22	2	2	38	37.2	43.9	4
5	Pipe 1	33.250	42	41	16	10	29	12	26	2	2	41	40.2	47.3	5
6	Pipe 1¼	41.912	50	43	17	11	31	12	32	2	2	50	49.0	57.7	5
7	Pipe 1½	47.805	55	45	18	12	33	12	38	2	2	54	52.8	62.4	5
8	Pipe 1 3/4	53.748	65	48	18	13	35	13	44	2	3	63	61.8	72.7	5
9	Pipe 2	59.616	70	52	20	14	39	13	48	3	3	67	65.5	77.4	5
10	Pipe 2¼	65.712	75	54	20	16	41	13	54	3	3	77	75.5	88.9	5

Figure 28
STANDARD DIMENSIONS OF TERMINAL TUBES FOR SURFACE VESSELS

j. Receptacles and Outlets

A number of different types of outlets were installed in Japanese naval vessels for different purposes and at different voltages. No attempt was made to standardize on outlets installed on a given voltage such as has been done in U. S. naval vessels. Further, no outlets were provided with ground connections.

8. Submarine Installations

Table IV contains a tabulation of the propulsion plant and power plant in Japanese submarines. The study of installations for this report was limited to the I-400 class and I-201 class, typical late designs.

The standard practice is to use batteries for all auxiliary loads. In those vessels with auxiliary generators, the auxiliary generators may be used for either surface propulsion, charging batteries or for supply to auxiliary loads. Distribution of auxiliary power is from switchboards through circuit breakers for power and fuses for lighting. The voltage of the lighting bus on the switchboard is regulated by means of a manual rheostat. As a rule, the switchboard circuit breakers and the individual loads are supplied from the distribution panels. Switchboards and control boards are drip-proof, distribution panels and wiring boxes and fitting are watertight.

For loads such as radio and radar, which require a more constant voltage than can be obtained from the battery system, individual motor generators are installed. In addition there are two secondary systems installed in submarines, a 55 volt, 50 cycle, A.C. system for selsyn system and a 22 volt D.C. system for telephones. In the I-400 class the power supply for these systems is as follows:

Vessel	A.C., 55 volt, 50 cycle System	D.C. 22 volt System
I-400	7 KVA x 2	1 kw x 1
I-201	3 KVA x 2	1 kw x 1

The 55 volt, 50 cycle system is also used for fluorescent lighting fixtures.

Where remote control is installed, although the actual control is magnetic, the contactors are pneumatically operated.

Cable is brought through the pressure hull on submarines by the use of a combination of a community stuffing box and individual stuffing tubes for the cable. This method consists of first bringing the group of cables through a community stuffing box, as described in section I-A-7 of this report, and then bringing each cable out of the community stuffing box through a stuffing tube which employs rubber as the packing material. Detail dimensions of this method have not been obtained. Figure 29 covers the standard dimensions for terminal tubes used in Japanese submarines for watertight enclosures installed within the pressure hull.

In the arrangement of batteries, no consideration is given to minimizing magnetic fields.

Table IV
TABULATION OF POWER PLANTS ON JAPANESE SUBMARINES

Ship	Cruiser	Cruiser	Fleet	High Speed Sub	Medium Sub	Small Sub	Small Sub	Midget Subs		
Specifications	I - 400	I - 36	I - 176	I - 201	Ro - 50	Ro - 101	HA - 201	A	C	D
Main engine	(M) 1200 hp x 2 (G) 950 kw x 2 V = 220 200/330 N = 163	(M) 1000 hp x 2 (G) 900 kw x 2 V = 220 200/330 N = 190	(M) 900 hp x 2 (G) 800 kw x 2 V = 220 200/330 N = 200	(M) 1250 hp x 4 (G) 1000 kw x 4 V = 210 200/330 N = 600	(M) 600 hp x 2 (G) 355 kw x 2 V = 220 200/330 N = 300	(M) 350 hp x 2 (G) 200 kw x 2 V = 220 200/330 N = 600	(M) 1200 hp x 1 (G) 1000 kw x 1 V = 220 200/330 N = 600	(M) 600 hp x 1 V = 210 N = 1800	(M) 600 hp x 1 V = 210 N = 1800	(M) 500 hp x 1 V = 175 N = 1800
Aux. Generator	400 kw x 2 V = 240 - 330 N = 630	450 kw x 1 V = 240 - 330 N = 630	400 kw x 1 V = 240 - 330 N = 600	None	None	None	None	None	25 kw x 1 V = 100-130 N = 1300	100 kw x1 V= 100-130 N= 1300
Main storage batteries	Mk. 1 Model 13 120 x 3 1 hr= 5500 Ah x3 20 hr= 12000 Ah x 3	Mk. 1 Model 13 120 x 2 1 hr = 5500 Ah x 2 20 hr = 1200 Ah x 2	Mk. 1 Model 14 120 x 2 1 hr= 4500 Ah x 2 20 hr= 9500 Ah x 2	Special D Model 1044 x 2 1 hr = 9450 Ah x 2 20 hr= 11880 Ah x 2	Mk. 1 Model 15 120 x 2 1 hr= 3160 Ah x 2 20 hr= 6400 Ah x 2	Mk. 1 Model 15 120 x 1 1 hr = 3160 20 hr= 6400	Special E Model 120 x 1 8 hr = 6280	Special D Model 224 units 1 hr = 2100 Ah 20 hr= 2640 Ah	Special D Model 224 units 1 hr = 2100 Ah 20 hr = 2640 Ah	Special H Model 100 cells 1 hr= 2400 Ah
Control equip.	Manual (air type)	Manual (air type)	Manual (air type)	Remote control (magnetic)	Manual (air type)	Manual (air type)	Manual	Remote control (magnetic)	Remote control (magnetic)	Remote control (magnetic)
Speed Surface	11	14	14	17	13	12	13.5		8	10
(knot) Submerged	7	8	8	17	8	7	15.5	21	18	15.3
Displacement in metric tons	4,000	2,700	1,700	1,400	1,200	450	570			

Remarks

1. The generating capacity of high speed subs and HA-201 is limited by the maximum power of the main engine.
2. The system of battery connection in high speed subs is to connect a series of 58 into 18 parallel circuits. (The voltage of one battery unit is 4V.)
3. Speed given is designed.
4. The batteries of the A and C model midget subs are connected with 4 units in parallel (the voltage of one battery unit is 4V).

RESTRICTED

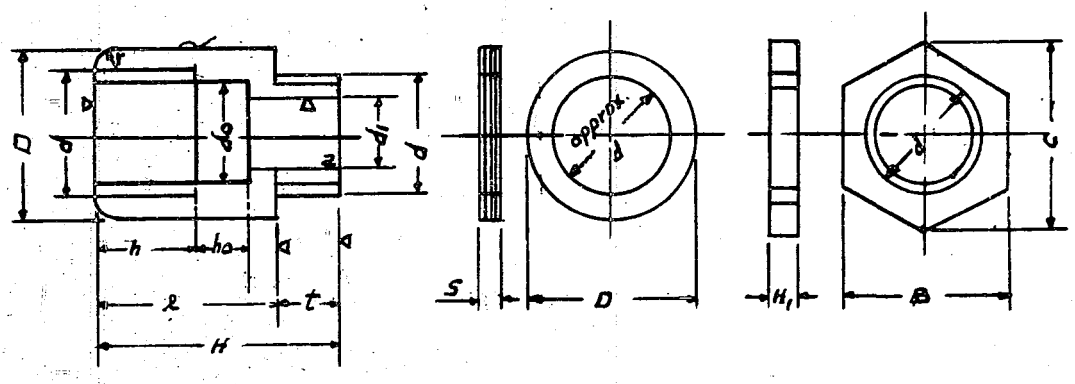

BOX STUFFING TUBES MK1 FOR SUBMARINES

WATER TIGHT PACKING

NUT

No.	Thread Name	d	D	H	h	ho	l	t	d_1	r	S	B max	B min	About	H_1
1	Pipe 3/8	16.663	22	36	11	10	25	11	11	1-5	2	21	20.4	24.2	4
2	Pipe 1/2	20.956	28	41	13	10	30	11	14	2	2	26	25.4	30.0	4
3	Pipe 3/4	26.442	34	46	14	10	35	11	18	2	2	32	31.2	37.0	4
4	Pipe 7/8	30.202	38	51	15	10	40	11	22	2	2	38	37.2	43.9	4
5	Pipe 1	33.250	42	58	16	13	46	12	26	2	2	41	40.2	47.3	5
6	Pipe 1 1/4	41.912	50	62	17	13	50	12	32	2	2	50	49.0	57.7	5
7	Pipe 1 1/2	47.805	55	66	18	13	54	12	38	2	2	54	52.8	62.4	5
8	Pipe 1 3/4	53.748	65	73	19	14	60	13	44	2	3	63	61.8	72.7	5
9	Pipe 2	59.616	70	78	21	14	65	13	48	3	3	67	65.5	77.4	5
10	Pipe 2 1/4	65.712	75	83	22	14	70	13	54	3	3	77	75.5	88.9	5

Figure 29
STANDARD DIMENSIONS OF TERMINAL TUBES FOR SUBMARINES

B. POWER EQUIPMENT

1. General Comments

Japanese shipboard electric power equipment shows very little originality in fundamental design and not much more in details of design. The origin of most of their designs is American although some are English and German. Most of the German designs are prewar; apparently very few German designs were obtained during the war.

The arrangement of D.C. power systems in Japanese vessels is similar to the English. The A.C. power systems are similar to U. S. systems.

The following is a summary of the origin of the designs of some of the Japanese equipment:

Generators - Westinghouse and General Electric
Motors - Westinghouse and General Electric
Circuit Breakers:
- Interruption Principle - Westinghouse
- Mechanism - General Electric
- Time Delay - Brown - Boveri

Voltage Regulators:
- Old Type - Unknown
- New Type - Westinghouse

Dead Front Fuses - Siemens - Halske
Snap Switches, Rotary Type - German
Motor Controllers - Combination of many foreign designs

The equipment was designed to meet only approximately 150 foot-pound requirements. This resulted in considerable damage to and malperformance of electrical equipment during battle. In several cases generator breakers tripped due to shock, causing loss of all electrical power.

In general, the design of electrical power equipment is from five to ten years behind design in the United States. A great many examples of this can be cited. For instance, the Silverstat regulator was first used in

United States naval vessels in 1940 and the design of a similar regulator was just being completed in Japan at the close of the war. The U. S. Navy first used 450 volt A.C. electrical systems in 1934 and the Japanese first used such a system in 1940. The Japanese did, however, adopt 220 volts A.C. for destroyers in 1935.

There are many reasons why such a condition existed. Most of the large Japanese electrical manufacturers were affiliated with foreign companies. The foreign companies furnished the Japanese companies with designs during peace time, but only after the equipment had been completely developed and had been on the market for some time. Despite the intelligence and high level of education of many of the Japanese engineers, this reliance on foreign designs together with the lack of originality of the Japanese, prevented the development of worthwhile new designs.

Another important contributing factor was the lack of real cooperation between manufacturers and the Navy. Manufacturers engineers seldom were familiar with operating requirements or conditions. They seldom were permitted to know in what vessels the equipment was to be used, to inspect equipment during installation, to observe the operation of equipment at sea, or to inspect damaged vessels. Many devices were designed by, and some even built by, the Navy; these devices, almost without exception, were hopelessly obsolete. The manufacturers' opinions on such devices seldom were sought or desired and in many cases such designs were kept secret.

If a manufacturer did propose a new design, the formalities of design approval and type approval test were cumbersome and time consuming.

In many cases industrial equipment was superior to similar Navy equipment. Industrial equipment could have been converted to Navy standards or originally designed for both Navy and industrial use. This was not done at all in many cases and was done very late in others. The reasons seem to be the combination of a lack of knowledge of the need for such equipment, complacency on the part of the Navy as to the adequacy of existing designs, and difficulty of obtaining approval. In some cases an attempt was made to convert to Navy standards with no success. Similar devices were converted to Navy standards in the United States even though the Navy requirements were much more severe.

Design specifications were written around that which was already developed or which could easily be developed. There does not seem to have been a continuous demand for improved performance. A compromise was reached between the ideal and the practical performance characteristics. Once decided upon, the specification usually was considered the ultimate rather than the first step in obtaining ideal performance characteristics.

The fact that a given piece of apparatus was manufactured by only one company reduced the desire or necessity for that company to initiate design improvements.

The Japanese Navy exercised a very rigid control over the design and manufacture of D.C. equipment and little progress was made, with the result that designs tended to stagnate. With the advent of A.C., first 230 volt and later 450 volt, it became necessary to rely on the manufacturers to a considerable extent as the Navy had had little experience along this line. This resulted in the infusion of many new ideas.

The manufacturing facilities and practices were far below the standard current in the United States today. Mass production methods were not used to any extent. Special tools, dies, fixtures, etc., were used only to very limited degrees. The buildings and working conditions were, however, very good.

In judging equipment design of the Japanese it must be remembered that they were hampered by a lack of materials and manufacturing facilities and also that they had built no major surface vessels for more than a year preceding the end of the war.

2. Power Switchboards

a. Types

There are two basic types of switchboards in Japanese naval vessels. (NavTechJap Document Number ND50-1078 gives specifications written in 1938 for dead front switchboards). One is the generator and distribution type with the control and metering equipment as well as the generator and feeder circuit breakers mounted on a continuous switchboard. The other is a highly segregated type with the control and metering equipment located on a benchboard and with the generator, loop tie and feeder circuit breakers mounted in watertight boxes and located in various compartments throughout the ship.

The first type is found in smaller ships such as destroyers and destroyer escorts, where a simple radial system with possibly a single bus tie is used, and on some of larger vessels of more recent design such as CV IKOMA and TAIHO. These vessels have a combination loop and radial system. A typical destroyer switchboard is shown in Figure 30. (For an instruction book on this switchboard see NavTechJap Document Number ND50-1082) The second type is more common. It was used on all of the older battleships, aircraft carriers, and

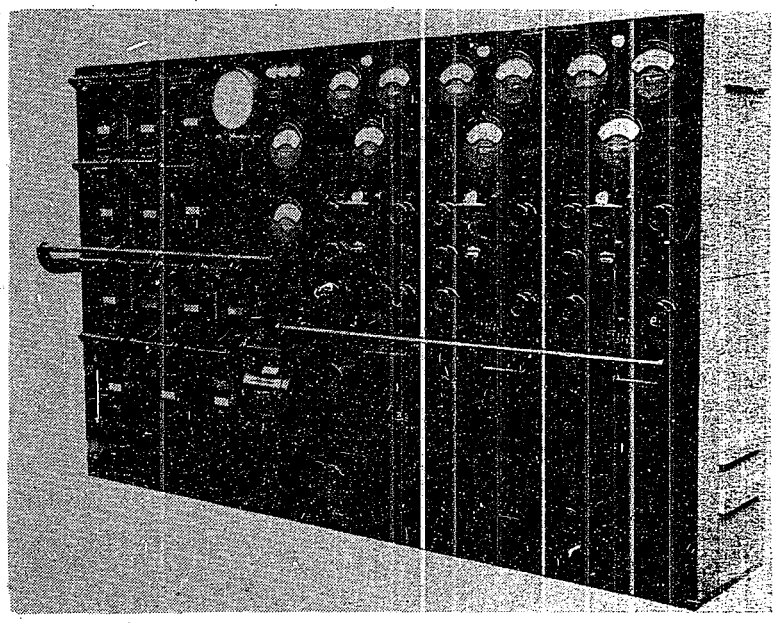

Figure 30
DESTROYER GENERATOR AND DISTRIBUTION SWITCHBOARD

cruisers. (For control, metering, and power system diagrams of aircraft carrier TAIHO, see NavTechJap Document Number ND50-1079). In both cases the generator, bus tie and main feeder circuit breakers in the larger ships are electrically operated and are controlled from one or more benchboards or switchboards.

b. Panels

Most modern switchboards are of the dead-front type. The panels are flat steel sheets and are secured to the angle frame by means of screws. Panels on which instruments are mounted are usually a hinged type secured by means of knurled thumb screws. Such devices as instrument switches, circuit breakers, knife switches, and rheostats are secured to the frame work of the switchboard. The panels in front of them can be removed by removing the device operating handle.

Where live front switchboards are used the panel material is usually paper base laminated phenolic material. In some cases, however, knife switches and fuses are secured to an insulating tube which fits over a steel rod. The steel rod is secured at the top and bottom to cross angles. This design does not appear to be shock proof.

c. Frames

Switchboard frames are usually of the box type and are constructed of steel angles and shapes. Welded construction is utilized except where a structural member has to be removed for maintenance purposes. Some switchboards consist of unit panel frames which are bolted to each other and to the base channels. Others consist of an all-welded frame utilizing either unit panel frames welded together or common intermediate members.

The top, sides, and rear are provided with sheet steel enclosures which have louvres for ventilation.

Top braces are used on all switchboards and in many cases these braces extend vertically upward to the overhead beams.

Switchboards are secured to deck beams by either welding or bolting.

d. Mounting of Equipment

Equipment is not mounted on panels or framework in as secure a manner as on U. S. Navy switchboards. The mounting bolts for similar weight equipment are smaller and many items are cantilever mounted or are secured to cantilever type brackets.

According to both Navy and civilian engineers ease of accessibility for maintenance or replacement purposes was considered extremely important. Despite this fact, however, no considerable success in this direction was noted. The rear of the switchboards usually are very close to a bulkhead and one or both ends are frequently so located with respect to bulkheads or other equipment as to seriously restrict access to the rear of the switchboards. End and rear enclosures are difficult to remove. The equipment within the switchboards is mounted in such a manner as to make it extremely difficult to reach many pieces of equipment. This congestion appears to occur in certain sections while adjacent sections have a considerable amount of waste space. Terminal boards in easily accessible positions are, however, usually provided for all ships power and control cables.

e. Wiring

Seven strand, 4,000 circular mil wire is used wherever extra flexibility or larger size for current carrying capacity is not required. The extra flexible wire has approximately 40 strands.

The insulation consists of a layer of rubber, and outer layer of cotton and a fire proof varnish. The outer layer is asbestos where extra heat resistance is required.

The specifications for wire are given in NavTechJap Document Number ND50-1070.

Simple color coding similar to that used in the U. S. Navy is employed. Terminals and terminal blocks are marked with wiring diagram designations; wire ends, however, are not so marked.

Either looped ends and crimp washers or solder type terminals are used, except for a few devices which have simple clamp type connectors as a part of the device.

The wire groups are well secured to angles or panels by means of steel bands with screws at each end. "Chicken bands" are used for securing the wires in a group.

The following table shows the current carrying capacity of various sizes of wire at 50°C:

4000 C.M.	-	16 amperes
7000 C.M.	-	22 amperes
11,000 C.M.	-	28 amperes
16,000 C.M.	-	35 amperes

f. Buses

In larger ships of earlier design no buses are used. Cables are used for connections to generator and ring tie circuit breakers. These

circuit breakers and also the feeder circuit breakers are housed in individually mounted watertight boxes.

The contact surfaces of bus bars are soldered in surface vessels and generally silver plated in submarines. The exposed surface of bus bars and connections are covered with an insulating paint and are color coded for phase or polarity indentification. D.C. buses have the following relative locations: positive and negative top to bottom, front to back, or left to right (facing the rear of the switchboard). A.C. buses have the following relative locations: A, B, and C top to bottom or left to right (facing the front of the switchboard).

Bus supports are usually fabricated from laminated phenolic material and appeared to be quite adequate.

Few edgewise bends and only relatively simple flat bends are used. This requires the use of several pieces in lieu of a single piece of bus.

A temperature rise of 50°C is permitted. A ¼" x 2" bus bar is rated at 900 amperes, D.C. The bus bar joints on surface vessel switchboards are tin soldered to obtain high carrying capacity.

g. Apparatus

(1) Circuit breakers

No type AQB or NQB circuit breakers were used in any ship, dead front knife switches and fuses being used in lieu of such breakers. An attempt was made to use a breaker similar to the Westinghouse type AB breaker, but the Japanese were unable to design one which would pass the shock test. Such a breaker was used in one merchant ship. (For instruction book, see NavTech-Jap Document Number ND50-1083).

The ACB circuit breakers are of several types. The type used in most of the older ships was designed by the Navy and manufactured in Navy Yards. These breakers are of very inferior design, being quite large and heavy and having very low interrupting capacity. A later design used in all except the most recent vessels is a carbon arcing tip and laminated copper brush type similar to the Westinghouse type CL circuit breaker.

With the advent of 440 volt A.C. ship's service systems of fairly large capacity, it was necessary to develop an improved ACB circuit breaker. A design committee was formed consisting of representatives of the Navy, SHIBAURA Electric Co. Ltd., MITSUBISHI Electric Co. Ltd., FUGI Electric Co. Ltd., and NISSHIN Electric Co. Ltd. Each of the four manufacturers submitted a sample breaker to the Navy for test. All tests except the interrupting tests, which were made in the SHIBAURA laboratory, were conducted in a Navy laboratory.

After the completion of the tests, the advantages and disadvantages of each design were discussed and the best parts of each design were adopted as standard. In some cases, there was doubt as to which design was the best and in those cases both manufacturers maintained their original design for the second sample. For example, MITSUBISHI Electric Co. adopted the SHIBAURA Electric Co. operation mechanism but each kept its original interrupting principle. After the completion of the tests on the second sample, all manufacturers adopted the MITSUBISHI Electric

Co. interrupting principle. MITSUBISHI was using the Westinghouse De-ion principle and SHIBAURA had been using the General Electric Co. pin type arc chute.

The largest breakers of this type have 1000 amperes, 3 pole, 40,000 amperes (peak current) interrupting capacity.

Generator breakers are tripped by either series overcurrent devices or overcurrent relays. Bus tie breakers are non-automatic and feeder breakers have series overcurrent trips.

The generator breakers have long time delay only. This time delay varies from 15 to 30 seconds at 125 to 150% of rated current to four or five seconds at 700% of rated current. Feeder breakers for single motors also have short time delay devices which by-pass the long time delay devices for currents above 700% and reduce the time delay from 0.2 to 0.3 seconds. Feeder breakers that supply distribution panels have short time delay devices only. These circuit breakers have a minimum trip value of 700% and a time delay of 0.2 to 0.3 seconds. No breakers have instantaneous trip.

The following is a description of the tripping mechanism for a feeder breaker for a single motor. There is a U-shaped iron core with a coil on one leg and a Warren shaded pole motor in the other leg. The open end of the U is bridged by an armature pivoted at the end of the leg of the U that does not have the coil. When an overcurrent condition exists the armature is at first prevented from moving by a spring connected in tension between the armature counter balance and a lever pivoted at the same point as the armature. Below the short time delay pick-up current the armature does not have sufficient force to stretch the spring and the free end of the lever is held against the leg of the U by a toggle which is secured by a latch.

When the current in the coil rises above the minimum tripping current of the breaker, a bar pivoted on the frame at the upper end moves in such a direction under the influence of the magnetic flux that it engages the teeth of the sector gear with those of another gear wheel. This gear is turned by a worm gear attached to the shaft of the Warren motor rotor. The above mentioned bar also releases the motor rotor.

The sector gear then moves in a counter clockwise direction until a pin attached to it strikes the latch which secured the previously mentioned toggle, releasing the toggle and permitting the upper end of the previously mentioned lever to move in a clockwise direction. This reduces the tension on the armature restraining spring and permits the armature to close the gap.

This motion rotates a rod rigidly secured to the armature at its pivot point. The rotation of this rod moves a lever attached to the other end in a clockwise direction. The outer end of this lever is attached through a precompressed spring to a rack. This rack engages one of a series of gears. There is a fly wheel attached to the shaft of the last gear in the series. This causes a time delay of 0.2 to 0.3 seconds.

If the armature moves slowly as described above, the spring is not further compressed.

For currents above the minimum setting of the short time delay device, the armature restraining spring is stretched and the

armature closes the gap with little or no time delay. The pre-compressed spring mentioned above is then further compressed and drives the flywheel through the gear train. The force exerted by the spring is independent of current and consequently the time delay is constant at 0.2 to 0.3 seconds for all currents above the minimum pick-up value.

The motor latching bar is restrained by a spring. The breakers minimum tripping current can be varied by adjusting the tension of this spring.

There is a torsional reset spring on the sector gear and a coil reset spring on the armature.

If the current goes above the minimum trip value, it has to fall below 110% of rated current for the breaker to reset. The time delay mechanism is shown in Figure 31.

(2) Knife switches

Knife switches, both live and dead front types, are used to a considerable extent. The live front types appear to have no novel features. The dead front switches are of both the open and enclosed type. The open type consists roughly of a base mounted on supports behind the front steel panel with a knife switch mounted thereon. The switch is operated by means of a mechanical linkage which extends through the front panel.

One type of load break knife switch consists of a conventional knife switch provided with a De-ion type arc chute. This switch will open ten times rated current.

As previously stated, knife switches are used on load center switchboards and power panels in lieu of type AQB circuit breakers.

(3) Fuses and fuse holders

The fuses used usually are of the renewable cartridge type with knife blade contacts. Some non-renewable fibre barrel cartridge type fuses are used. The Siemens-Halske type of non-renewable porcelain barrel fuse and dead front porcelain fuse holder also is used to a very limited extent.

The fuses are locked in either by a laminated phenolic material bar attached to the fuse box cover or by separate lock-in devices. These devices consist of a pin through the upper fuse clip above the fuse contact blade and an over center toggle type hasp on the lower fuse clip. This lock-in device is both simple and effective.

For 450 volt A.C. service a special cartridge fuse is used. This fuse has a laminated phenolic outer barrel and an asbestos lining. The space around the silver-zinc alloy fuse element is packed with silica sand.

The fuses will interrupt a continous current of 10,000 amperes (rms). They will not trip in 30 minutes on 160% of rated current and will trip in less than 30 minutes on 200% of rated current.

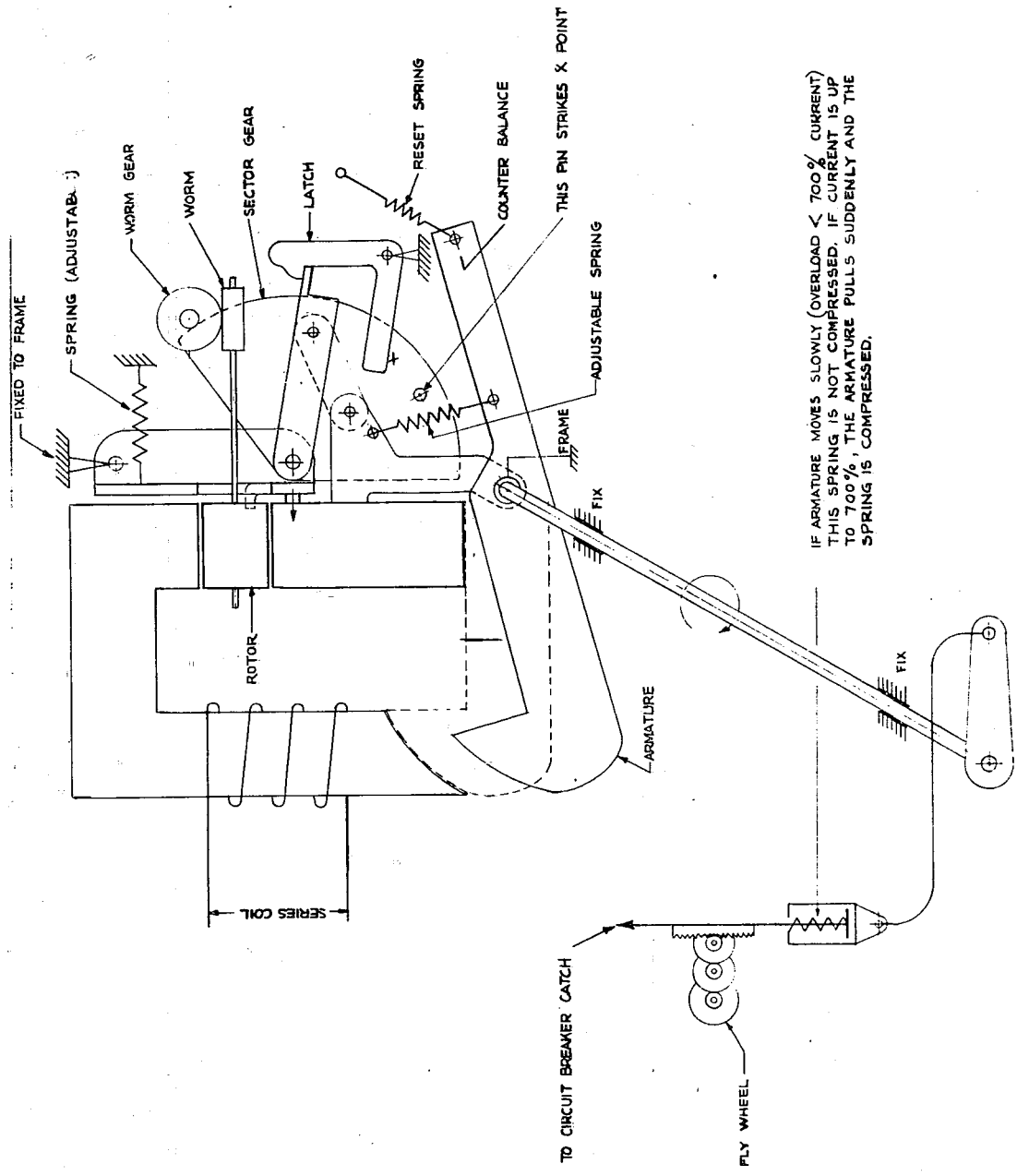

Figure 31
A.C. CIRCUIT BREAKER TRIPPING AND TIME DELAY DEVICE

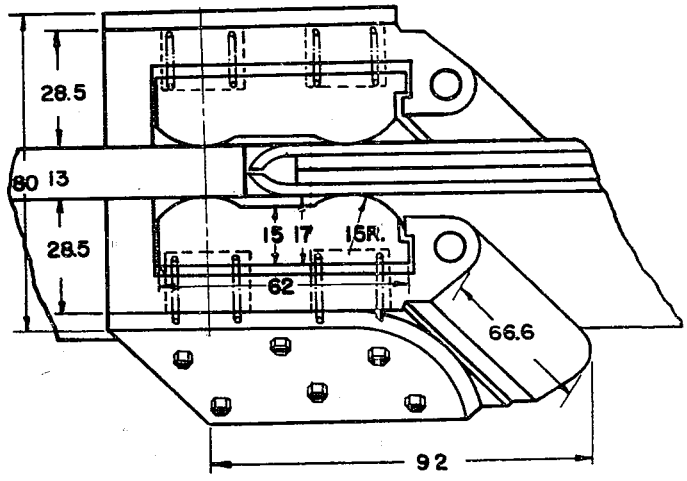

Figure 32
A.C. CIRCUIT BREAKER DRAWOUT CONTACTS

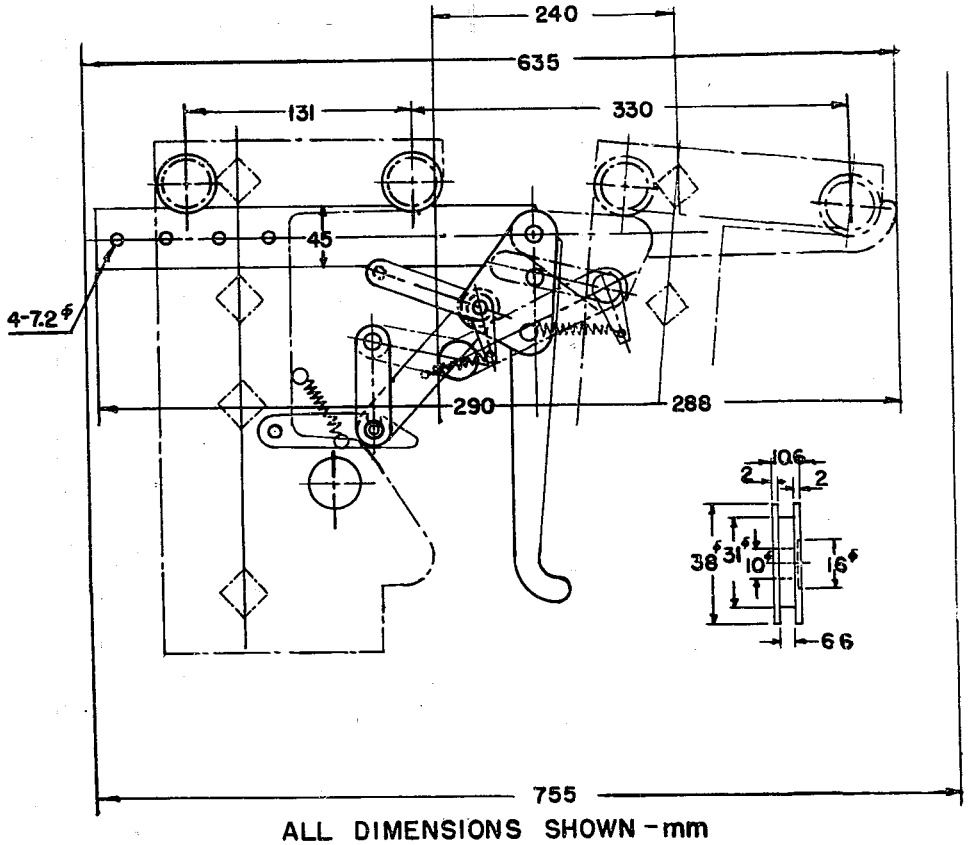

Figure 33
A.C. CIRCUIT BREAKER WITHDRAWING MECHANISM

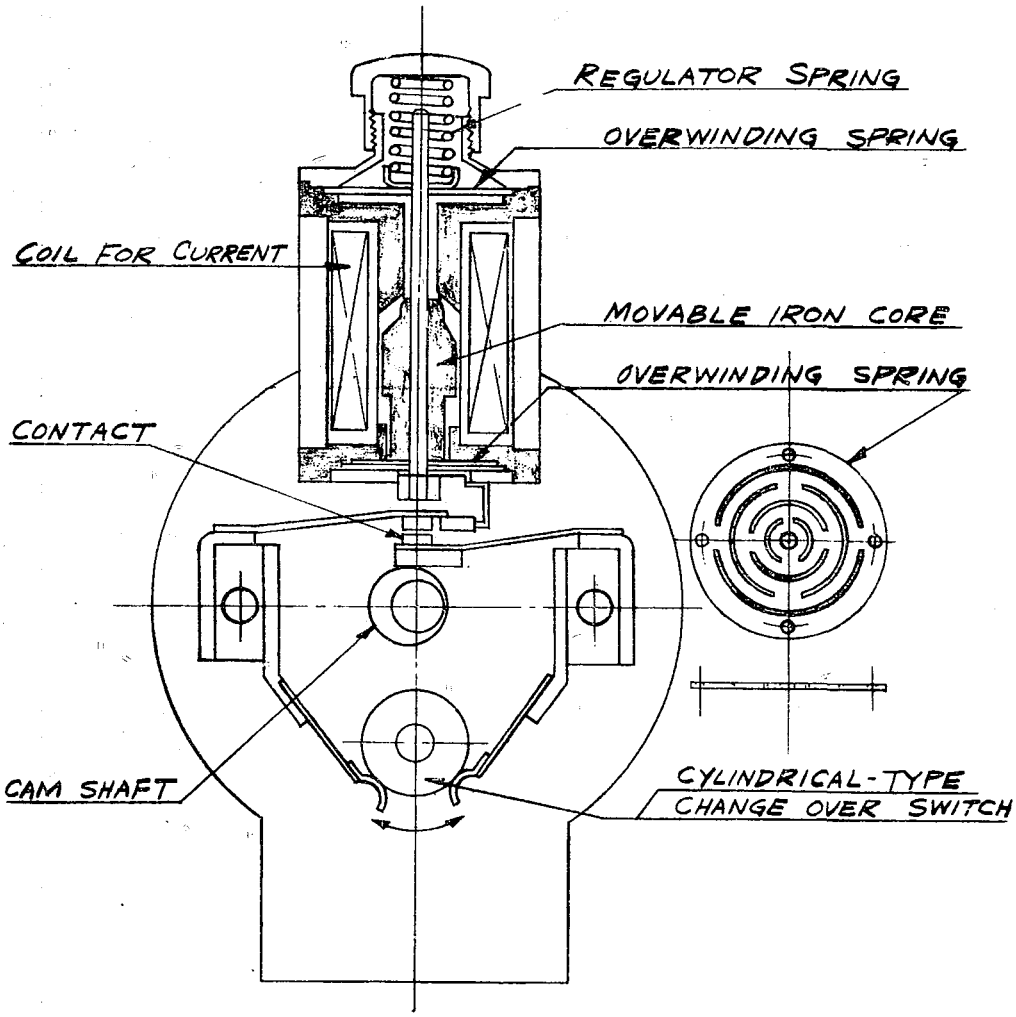

Figure 34
ROTARY TYPE AUTOMATIC VOLTAGE REGULATOR
CROSS CONSTRUCTION DIAGRAM

(4) Voltage regulators

The direct acting rheostatic type operating in the exciter field is the only type of voltage regulator which was used. The standard regulator was manufactured only by MEIDENSHA Electric Co. Ltd. and was furnished in two sizes, one for generators below 270 KVA and one for generators of 350 KVA and above. This regulator is shown in Figure 34 and a diagram of connections is shown in Figure 35.

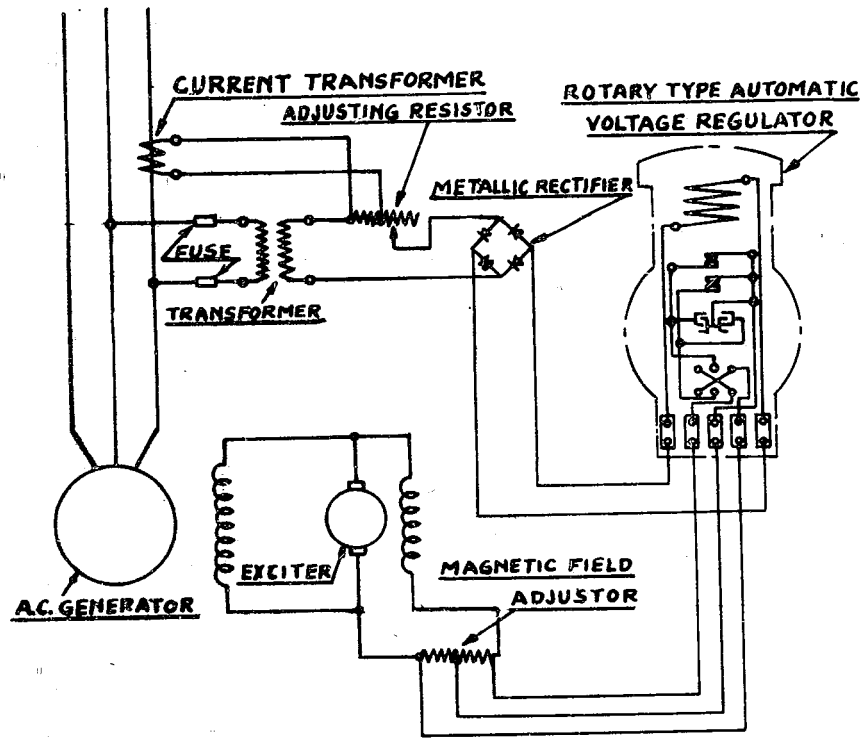

Figure 35
ROTARY TYPE AUTOMATIC VOLTAGE REGULATOR AND EXTERNAL CONNECTIONS

The voltage sensitivity is ± 1% and on changes from no load to full load or full load to no load at 0.95 P.F. the voltage deviation is less than 20% from normal and the voltage recovery time is two seconds.

Voltage regulator specifications are given in NavTechJap Document Number ND50-1071.

The MITSUBISHI Electric Co. Ltd. developed a regulator similar to the Westinghouse Silverstat, however, the type approval tests were never completed by the Navy and consequently none was ever installed. This regulator was superior to and would have replaced the MEIDENSHA regulator as the standard. In addition, the new type of regulator cost only about 60% as much as the old one.

(5) Instruments

The instruments used were large in size and poor in quality. The Class 2 was four inches in diameter and the Class 3 was six inches in diameter.

The allowable error (%) under various abnormal conditions is listed below:

	Class 1	Class 2	Class 3
External Field Influence	2.0	3.0	6.0
Variation per degree C	0.025	0.1	0.2
When inclined 90°	0.5	1.5	3.0
Friction	0.3	1.0	2.0
Mounted on 3mm steel plate	0.2	0.5	2.0
Normal allowable error	0.5	1.5	3.0

The damping factor was as follows:

Class 1 ..... 15%
Class 2 ..... 30%
Class 3 ..... 45%

All instruments had to pass a vibration test at 1000 cycles per minute, as well as a 6 kilogram-meter shock test when struck from the rear and a 10 kilogram-meter test when struck from the top.

The dials are white with black markings and pointers. The instrument cases are black.

The instrument specifications are given in NavTechJap Document Number ND50-1072.

(6) Instrument switches

The instrument switches were designed by the Navy and are quite large and heavy. These switches consist of an insulating board with contact buttons mounted thereon and a rotating contact arm.

Several of the manufacturers made a switch which was quite similar to the Westinghouse Type W switch. However, this switch was not approved by the Navy as it did not pass the shock test.

(7) Instrument transformers

The current transformers are quite similar to the old 150 foot-pound transformers used by the U. S. Navy. They are essentially a standard commercial transformer but somewhat more rugged.

The potential transformers are of several different types and are also modifications of standard commercial transformers.

The potential transformers are normally 20 volt-amperes in capacity. When more capacity is required, additional transformers are used. No attempt is made to connect vital and non-vital instruments and voltage regulators to separate transformers.

(8) Relays

Induction disc reverse power relays are used to prevent motoring. The setting is sufficiently high not to cause the generator circuit breaker to trip unless either the generator or prime mover has been damaged in such a way as to cause more than the normal motoring power to flow.

Induction disc wattless relays are used to trip the tie breakers if an excessive amount of wattless current is flowing. These relays, which are set fairly high, were used because it was not believed that operating personnel were capable of properly dividing the reactive KVA.

Both of the above relays are 10 kilogram-meter shockproof.

The standard D.C. reverse current relay is shown in Figure 36. This relay can be adjusted by means of a screw to operate on reverse currents of from 10 to 20% at normal voltage. The relay will open its contacts at 60% of normal voltage with no current flowing. The reverse current necessary to cause the relay to operate decreases with decreasing voltage reaching zero at 10% of normal voltage.

The standard D.C. overload relay is shown in Figure 37. It can be adjusted by means of a screw to close its contacts at 115, 125, or 150% of rated current. Time delay is provided by means of a gear train and mechanical escapement mechanism. The time delay is 10 to 20 seconds at 150% of minimum tripping current and approximately one second at 600%. An instantaneous trip feature is provided by means of a spring between the armature and gear train.

(9) Automatic bus transfers

Very few automatic bus transfers were used as the Japanese did not consider that the speed of transfer or the automatic features justified the extra complication and expense. In most cases double throw knife switches were used for transfers. Automatic transfers were chiefly used for steering motors and gyro compasses.

(10) Indicator lights

The indicator lights on all ships inspected seemed to be of the same general design. They consist of a colored globe about two inches in diameter attached to the panel and a lamp and resistor or transformer attached to the switchboard frame. The lamps are either 100 volt neon lamps or 220 volt incandescent lamps. The indicator lamp transformers are 440/100 volt ratio.

(11) Nameplates

Both apparatus nameplates and instruction nameplates are used. Nearly every piece of apparatus has an instruction nameplate on which the internal and external diagram is reproduced. The apparatus nameplates are either paper or engraved black and white laminated phenolic material. The instruction nameplates and manufacturer's rating nameplates are mostly anodized aluminum, although brass, steel, and zinc also are used. Almost without exception the nameplates are perfectly legible even on the oldest ships.

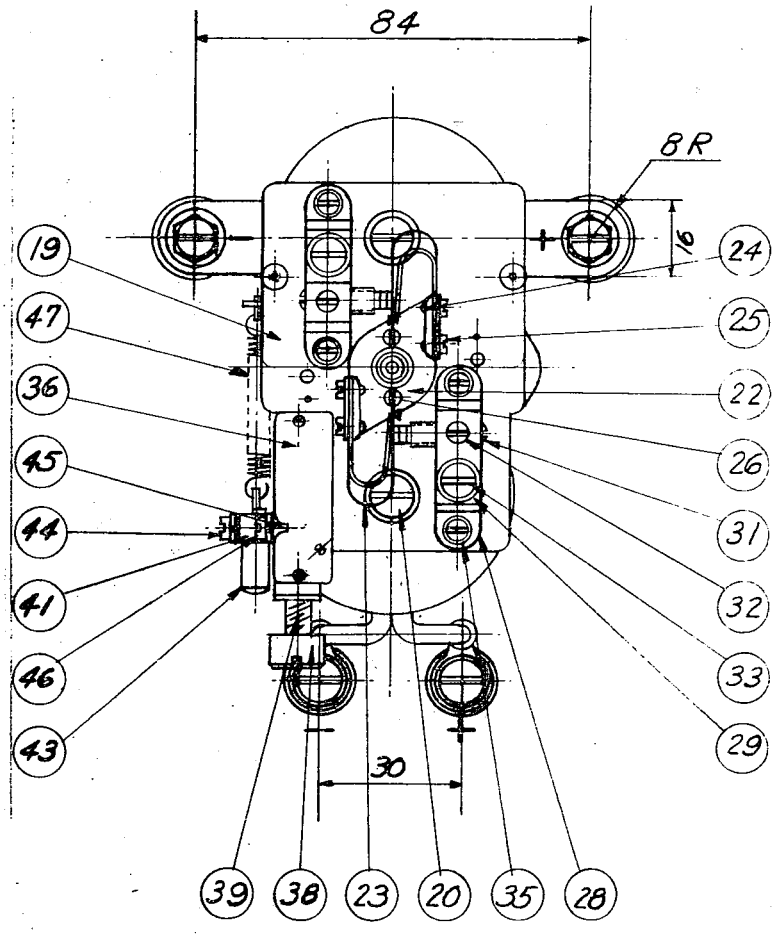

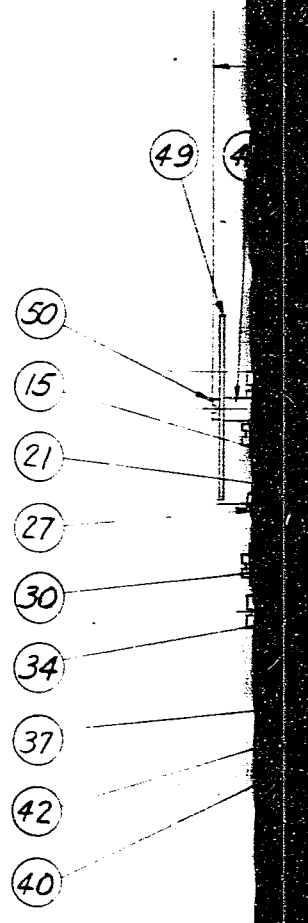

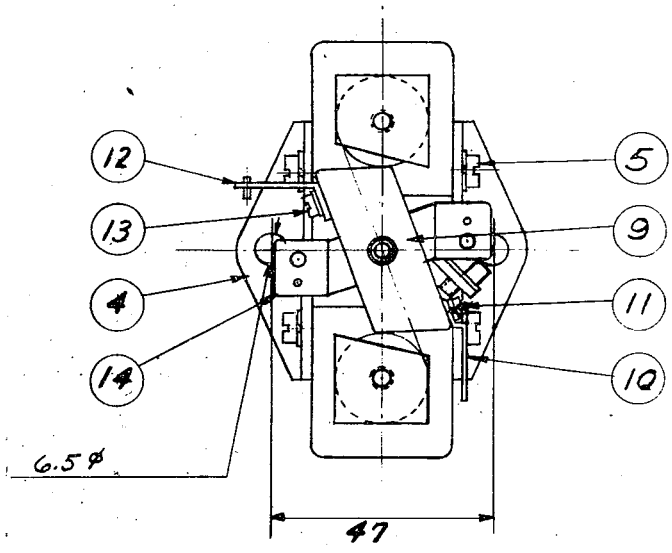

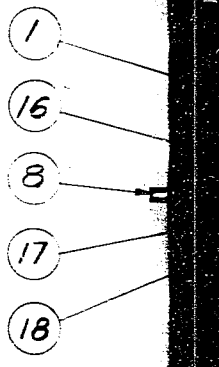

Figur
D.C., REVERSE C

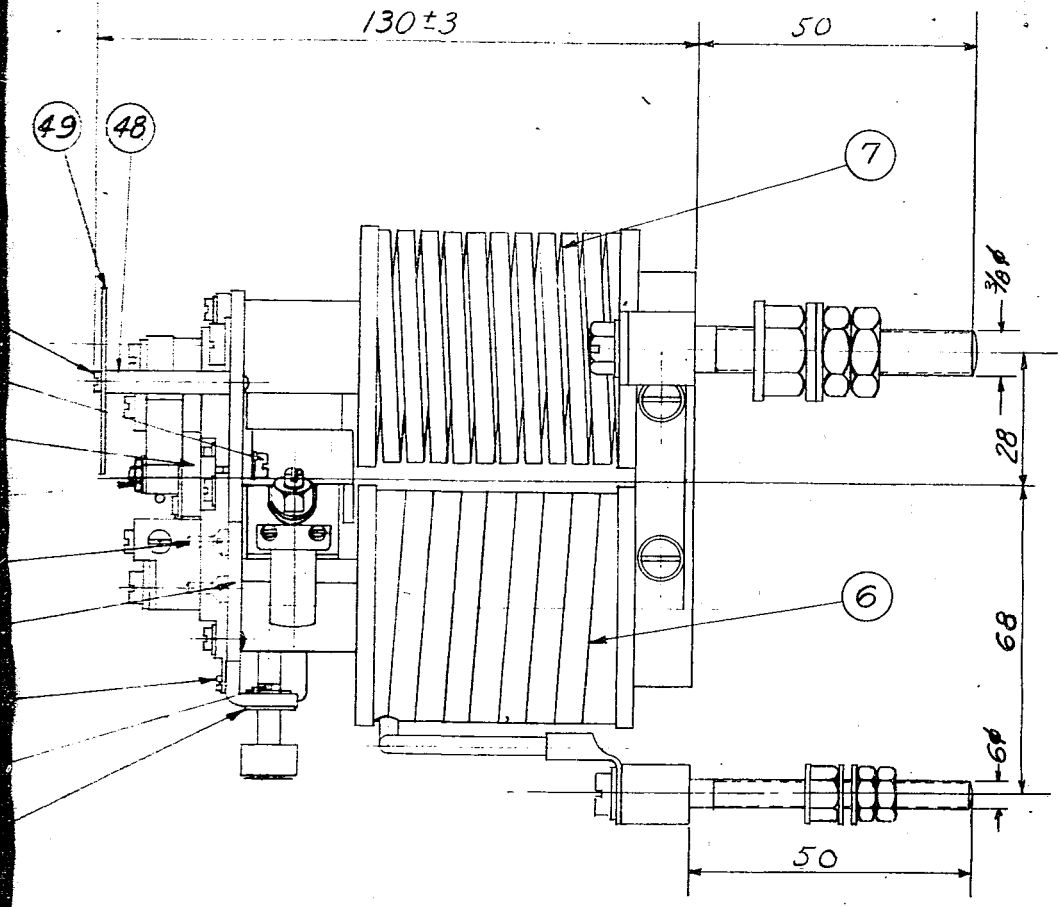

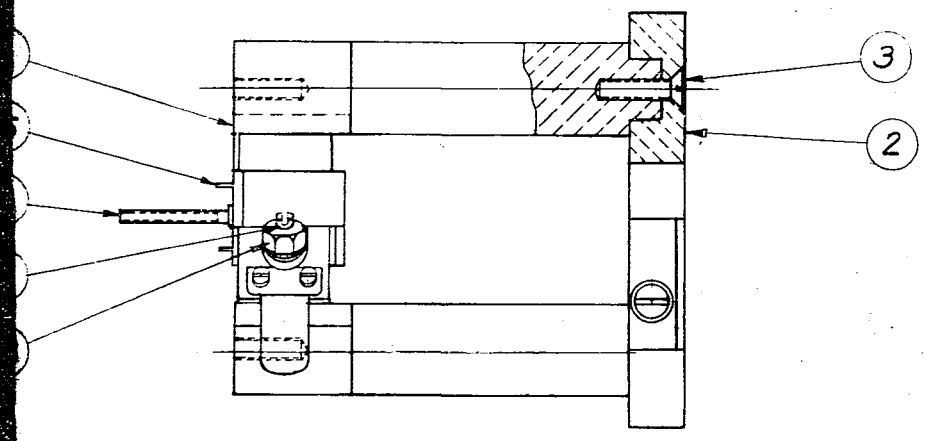

QUAN.	CHART NO.	NO.
2	V-483238	52
	E5-1012	51
2		50
1	V-481343	49
2	V-481344	48
1	V-481347	47
1		46
1	V-480557	45
1		44
1	V-480555	43
1		42
1	V-480553	41
2		40
1	V-49804	39
1	V-480552	38
2		37
1	V-480556	36
4		35
2		34
2		33
2		32
2	V-481337	31
4		30
2	V-481339	29
2	V-481340	28
1		27
2		26
4		25
2	V-481338	24
2	V-481335	23
1	V-481798	22
1	V-481336	21
2		20
1	E-46592	19
1		18
1	V-481797	17
2		16
2		15
1	E-451396	14
2		13
1	V-482472	12
2		11
1	V-482473	10
1	V-482471	9
1	V-481334	8
1	D-420832	7
1	E-46705	6
4		5
2	V-480545	4
2		3
2	V-482361	2
2	V-482362	1

Figure 36
EVERSE CURRENT RELAY

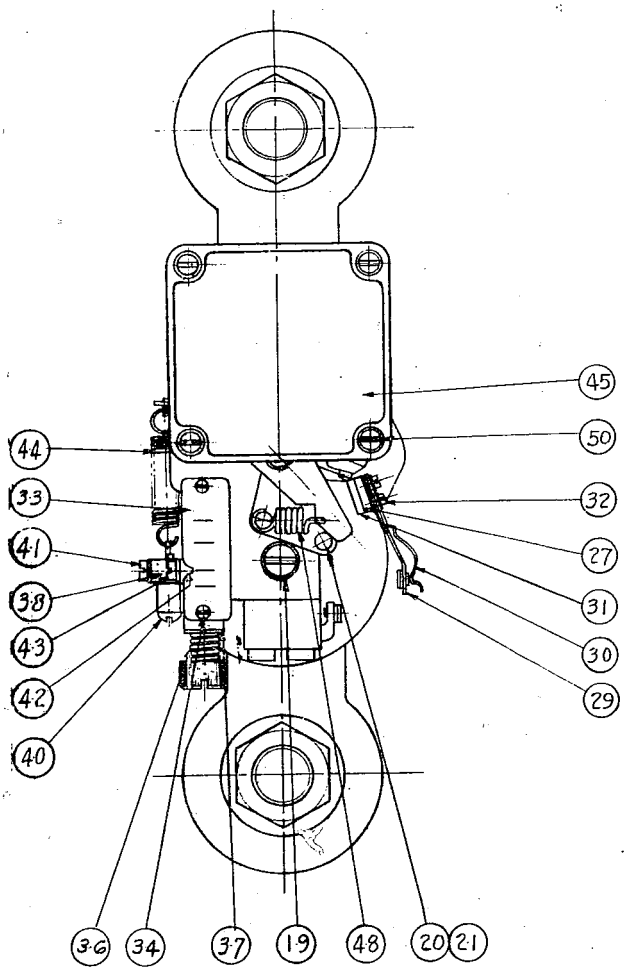

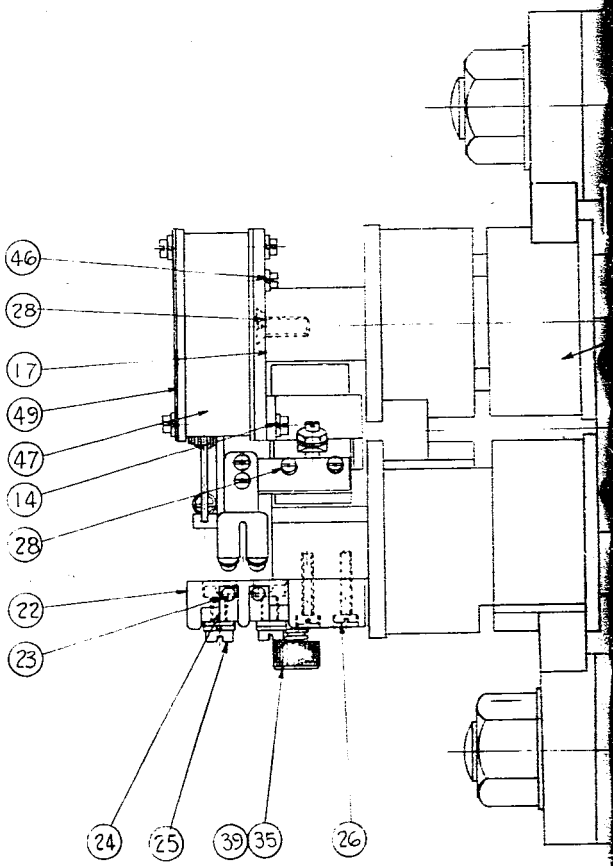

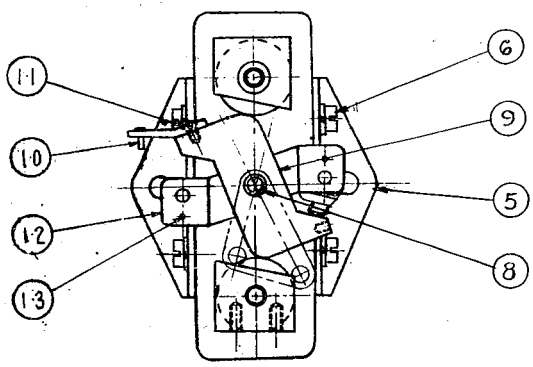

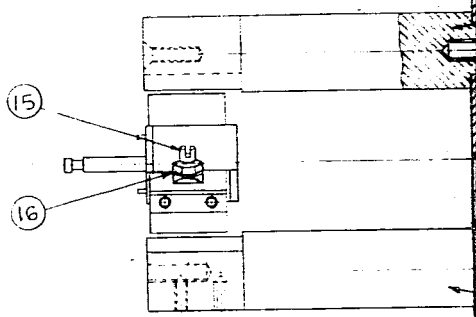

Figure 37
VIBRATION-SHOCKPROOF D.C. OVERLOA

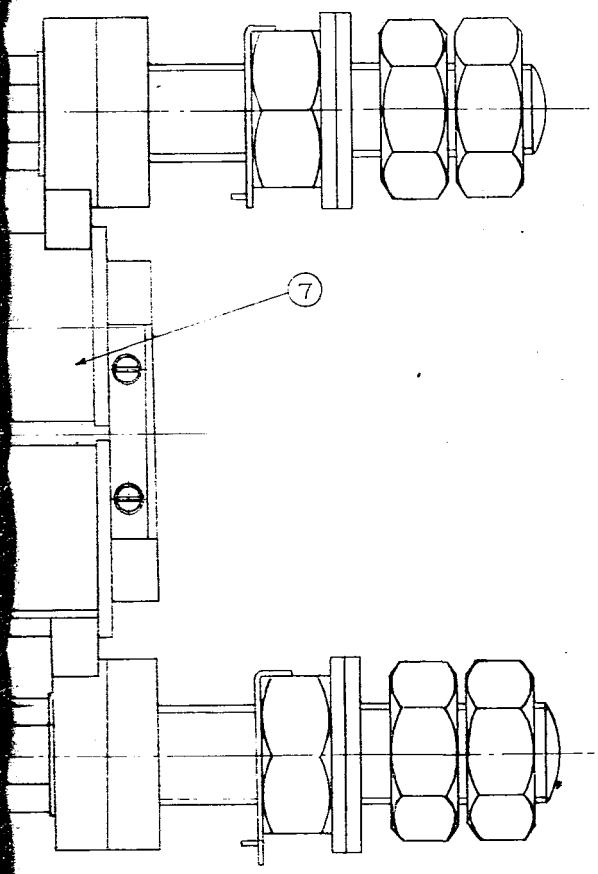

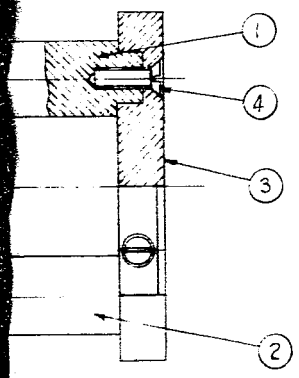

1	SOFT STEEL	V-482450	1	IRON CORE
1	" "	V-482451	2	" "
1	" "	V-480543	3	JOINT IRON PLATE
2	IRON		4	●
2	IRON	V-480845	5	ATTATCHENT FITTING METAL,
4	BRASS		6	●
1	COPPER & CASTING	C-410902	7	CURRENT COIL & DIAGRAM OF TERMINAL ORGANIZED
1	STEEL	V-480546	8	HOLDER
1	SOFT STEEL	V-480544	9	MOVING IRON CORE
1	BRASS	V-480554	10	FITTING (SPRING SYSTEM)
2	"		11	SCREW (IT'S HEAD IS HOLLOW SHAFT)
1	"	E-46490	12	SHAFT HOLDER - FITTING METAL
1	"		13	KNOCK PIN
2	"		14	●
1	"	V-481797	15	MOVING IRON CONE VOLT.
1	"		16	HEXAGONAL NUT.
1	"	E-46489	17	
1	"		18	
1	BRASS		19	●
1	IRON	E-46491	20	DRIVE LEVER
1	BRASS		21	KNOCK PIN
1	BAKELITE	V-480548	22	FIXED CONTACT POINT INSULATION PLATE
1	ELECTRON METAL PHOSPHOR BRONZE	V-480547	23	FIXED CONTACT POINT
2	BRASS		24	●
2	"		25	TERMINAL
2	"		26	●
1	BAKELITE	V-480551	27	MOVING CONTACT POINT INSULATION'S PLATE
2	BRASS		28	●
1	ELECTRON METAL PHOSPHOR BRONZE	V-480549	29	MOVING CONTACT POINT
1	PHOSPHOR BRONZE	V-480550	30	MOVING CONTACT POINT PROTECTED INSTRUMENT
1	BRASS	V-482415	31	MOVING CONTACT POINTS BINDING INSTRUMENT
2	"		32	
1	"	V-480586	33	GRADUATED DIAL
1	"		34	●
2	"	V-480552	35	WORKING VARIABLE RESISTANT VOLT.
1	STEEL	V-49804	36	SPRING
1	BRASS		37	WASHER (BUSHING OR SEAT)
1	"	V-480553	38	
1	"		39	KNOCK PIN
1	"	V-480555	40	SPRING (VOLT)
1	"		41	● THREADING
1	"	V-480557	42	INDEX (POINTER)
1	BRASS		43	● THREADING
1	PIANO WIRE	V-47801	44	SPRING
1			45	DIAGRAM OF TIMES INSTRUMENT ORGANIZED
3	BRASS		46	●
1	BRASS	V-480558	47	COVER OF TIMES INSTRUMENT
1	STEEL WIRE	V-49797	48	
1	ALUMINUM	E-44493	49	
4	BRASS		50	●=THREADING OR FLAT HEAD SCREW

OVERLOAD RELAY

(12) Ground detection

Ground detection is by means of incandescent lamps; voltmeters are not used. The lamps are permanently connected to the buses and to grounds; no switches are used.

(13) Rheostats

Most of the rheostats are of the faceplate and resistor tube type although a few vitreous enamel plate type rheostats are used. In most cases the rheostat is located in a convenient place remote from the rheostat handwheel and is driven by means of sprockets and a bicycle chain.

(14) Resistors

Both vitreous enamel and porcelain core (similar to Westinghouse Type M) resistor tubes are used. These resistor tubes are mounted in a variety of ways none of which appeared to be Class HI shockproof.

(15) Terminal blocks

The terminal blocks for small wiring are similar to those used in the U. S. Navy.

(16) Pushbotton switches

The pushbutton switches are very crude fabricated devices. They are of the open type and did not appear to be Class HI shockproof.

(17) Apparatus not used

The Japanese used no resilient mountings for any of their electrical power equipment. Also, they had no equipment corresponding to Fusetrons or rotary circuit breakers.

3. Interior Communication and Action Cutout Switchboards

The interior communication and action cutout switchboards and all of their component devices are far inferior to similar equipment used by the U. S. Navy.

These switchboards are live front type. No switches comparable in quality to Type J or JR switches are used. Knife switches and cartridge fuses in conventional fuse holders are used. There are no blown fuse indicators.

The design of all such switchboards was rigidly controlled by the Navy Ministry and had not even kept pace with other Japanese electrical equipment.

4. Motors

Both A.C. and D.C. motors are similar to Japanese industrial motors, which in turn are similar to the same types of motors made in the U. S. up to the start of the war. Very little progress appears to have been made in motor design during the war.

The design standards for D.C. motors are given in NavTechJap Document Number ND50-1073.

5. Motor Controllers and Starters

An application chart for D.C. motor controllers and starters is shown in NavTechJap Document Number ND50-1075. Typical D.C. starters are shown in Figures 38 and 39. A typical A.C. starter is shown in Figure 40.

Across the line starting is used for A.C. motors of five horsepower and less and either wye-delta or resistance starters for larger motors.

As a general rule, all motors are provided with overload protection by means of fuses or overload relays.

6. Generators

A.C. generators are very similar to those used for industrial service. The frames are somewhat more rugged, a better insulation is used, and the windings are more securely braced.

The design standards are given in NavTechJap Documents Numbers ND50-1076 and ND50-1077.

Some of the data on the largest A.C. ship's service generators is given below:

GENERATOR

	No. 1	No. 2
KVA	800	800
Volts	450	450
Amperes	1026	1026
Cycles	60	60
Poles	4	12
RPM	1800	600
P.F.	0.75	0.75
Xd"	0.125	0.196
Xd'	0.242	0.302
Xd	1.1	1.206
Td'	0.4	0.604
Td"	0.08	
Ta	0.025	0.045
Ra(75°C)	1.082%	
Tdo	4.22	2.41

Field Current at 100% Load 48
Field Current at 125% Load 55
Field Current at 150% Load 64

EXCITER

Normal Volts 100
Maximum Volts 160
Minimum Volts 30
KW 7.5

The total weight of generator No. 1 above and its exciter was 5000 kilograms. The generator had a 115% rating for one hour, 125% for 15 minutes, and 150% for one minute. Decrement curves are shown in Figures 41, 42, and 43.

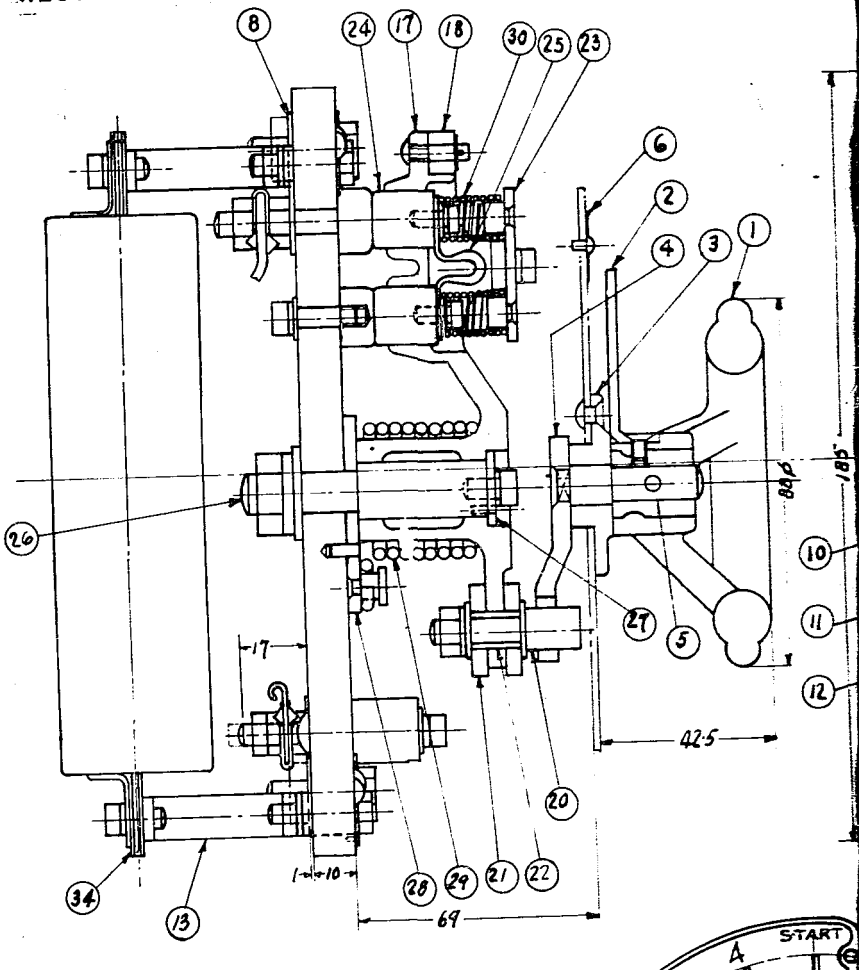

Figure
D.C. MOTOR STAR

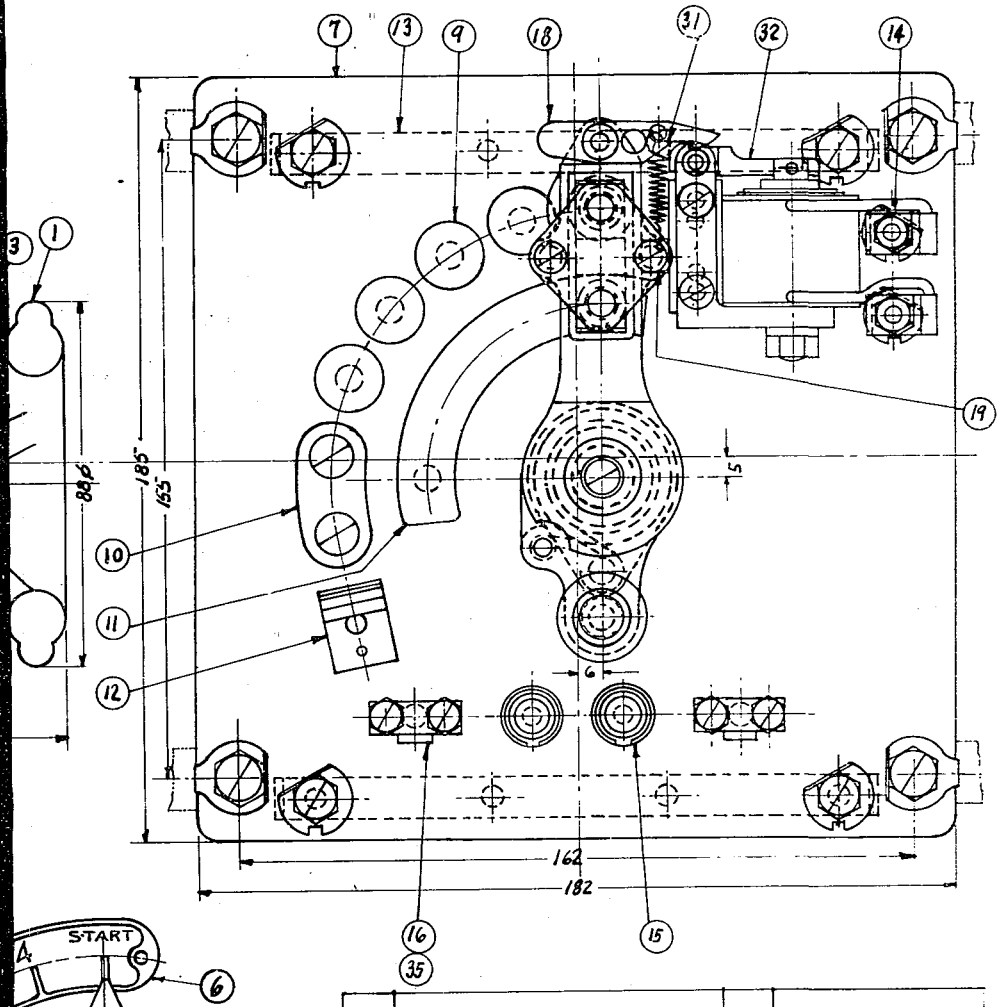

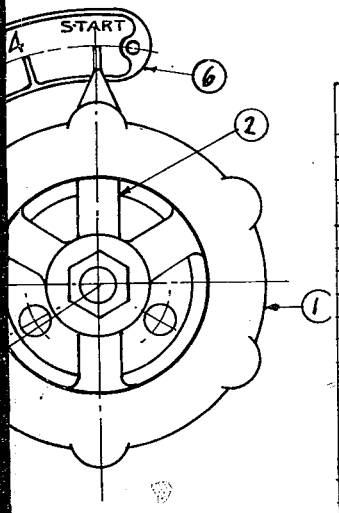

1	HANDLE 362009 - 1.2
2	NEEDLE 362008 - 6
3	BEARING 362008 - 4.5
4	COUPLING 362008 - 3
5	HANDLE HOLDER 362008 - 1.2
6	SCALE 437732 - 1.2
7	INSULATING BOARD 260119 - 1.3 - 5
8	WASHER 260119 - 2
9	CONTACTOR PIECE 260120 - 1 - 3 - 3.34.40
10	INSULATING PIECE 260120 - 4 - 8
11	CONTACT 260120 - 9 - 15. 34.40
12	SPRING PIN & SPRING 260120 - 16 - 22
13	RESISTING SUPPORTING BOARD 260120 - 27 - 33
14	CONTACT SCREW 260120 - 35 - 39.41
15	1 MODEL TERMINAL 437731 - 1 - 9.15
16	2 MODEL 1 MARK TERMINAL 437731 - 10 - A
17	CONTACT ARM 362007 - 1 - 5
18	WOODEN HASP 260118 - 1.2
19	SPRING RETAINER 260118 - 3.4
20	COUPLING SHAFT 260118 - 5 - 8
21	INSULATING WASHER 260118 - 9
22	INSULATING TUBE 260118 - 10
23	HOLDING BOARD 260118 - 11 - 14
24	BRUSH - 260118 - 15
25	CONTACT BOARD 260118 - 16 - 19
26	CONTACT ARM SHAFT 260118 - 20 - 23
27	WASHER METAL 260118 - 24 - 25
28	WASHER BOARD 260118 - 26 - 28
29	TWIST SPRING 260118 - 29
30	SET SPRING 260118 - 30
31	TENSION SPRING 260118 - 31
34	RESISTENCE SUPPORTING METAL 349344 - 1.15
35	2 MODEL 1 MARK TERMINAL 458818 - 1 - 4

Figure 38
OTOR STARTER, 60 A

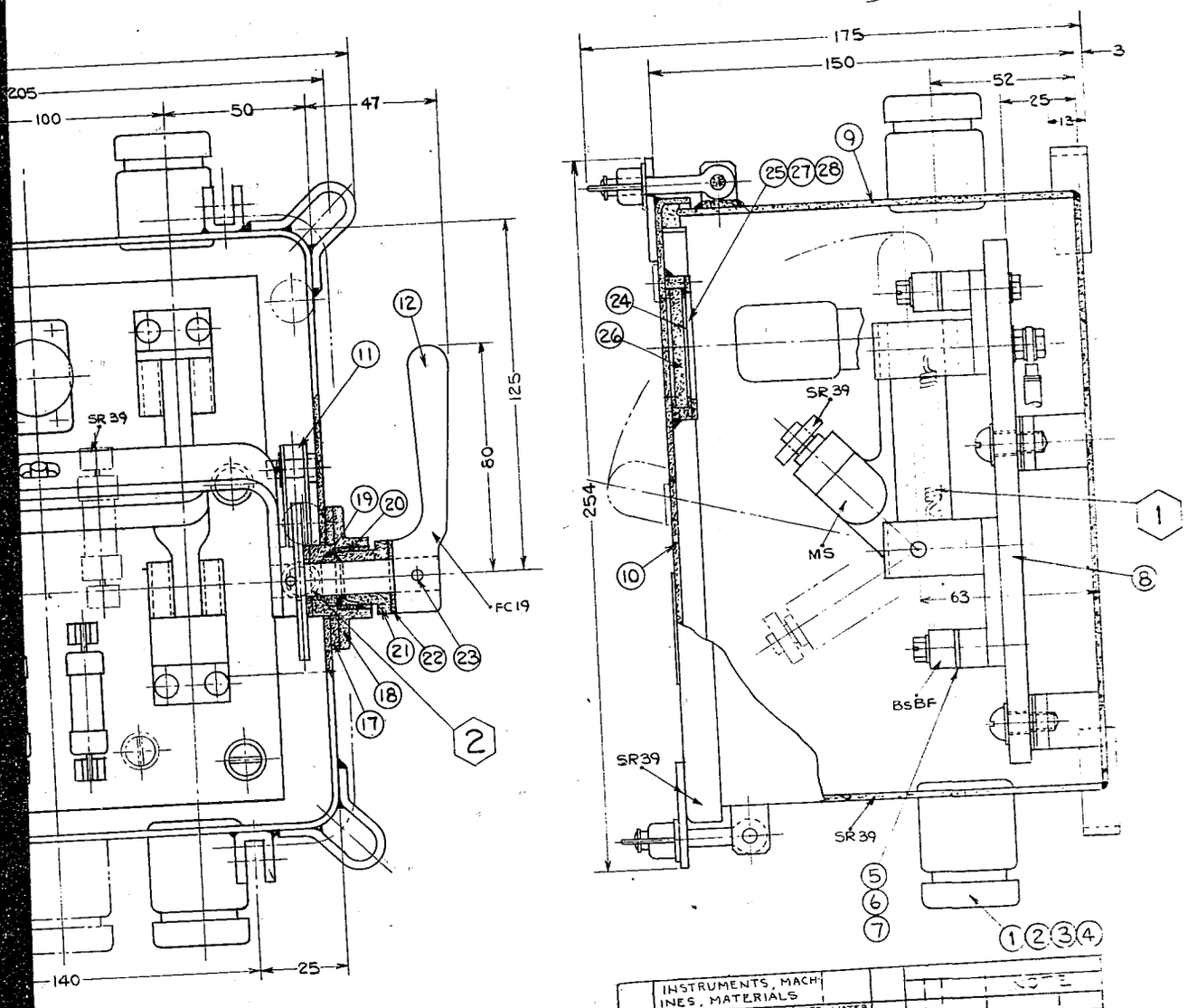

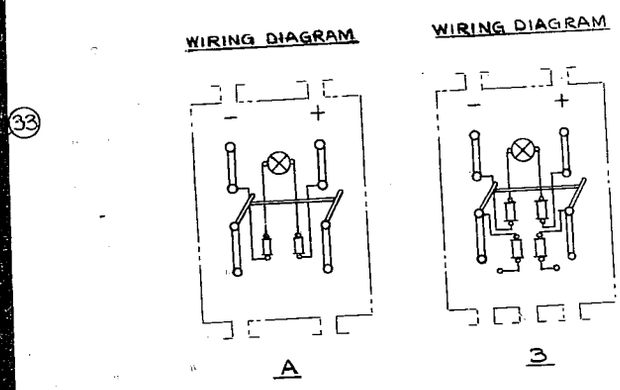

	INSTRUMENTS, MACHINES, MATERIALS				NOTE
1	NAVAL STANDARD BOX-TYPE WATER PROOF FOR ELECTRIC WIRE HOLE				
2	"				
3	"				
4	"				
5	NAVAL STANDARD TERMINAL SOCKET, NO. 1				
6	"				
7	"				
8	ASS. DIAGRAM ON THE PLATE; SEE ILLUSTRATION NO. A203554				
9	CASE; " NO. A203554				
10	COVER; " NO. A203512				
11	MOVE LIMITING DEVICE SEE ILLUSTRATION NO. 257749				
12	HANDLE " NO. A219782				
13	NAVAL STANDARD SAFETY FUSE; FORM NO. 1 INTERIOR 3A	2	0		
14	NAVAL STANDARD BI-TYPE NEON TUBE; FORM NO. 1	1	0		
15	" " "	1	0		
16	NAVAL STANDARD BI-TYPE SOCKET NO. 2; FORM NO. 1	1	0		
17	PACKING	1		532313	
18	FLANGE	1		A506149	
19	PACKING	2		2017-60	[illegible]
20	BUSHING SEAT FOR PACKING	1		532314	
21	PIN	1		A506150	
22	BRASS WASHER	1		1017-31	
23		1		2318-4	
24	PACKING	2		2009-119	
25	TIGHTENING (OR BINDING) PLATE	1		532 342	
26	CLEAR GLASS; THICKNESS 3-50	1			
27	FLAT IRON SCREW 4X8	4	0	0	[illegible]
28	STANDARD SPRING WASHER 4	4	0		
29	ROUND IRON SCREW 3X20	4	0		
30	NUT 3	4	0		
31	SMALL WASHER 3	4	0	0	
32	STANDARD SPRING WASHER 3	4	0	0	
33	RUBBER TAPED WIRE FOR LOW TENSION 1-1M	1			

Figure 39
D.C. MOTOR SWITCH, 60 A

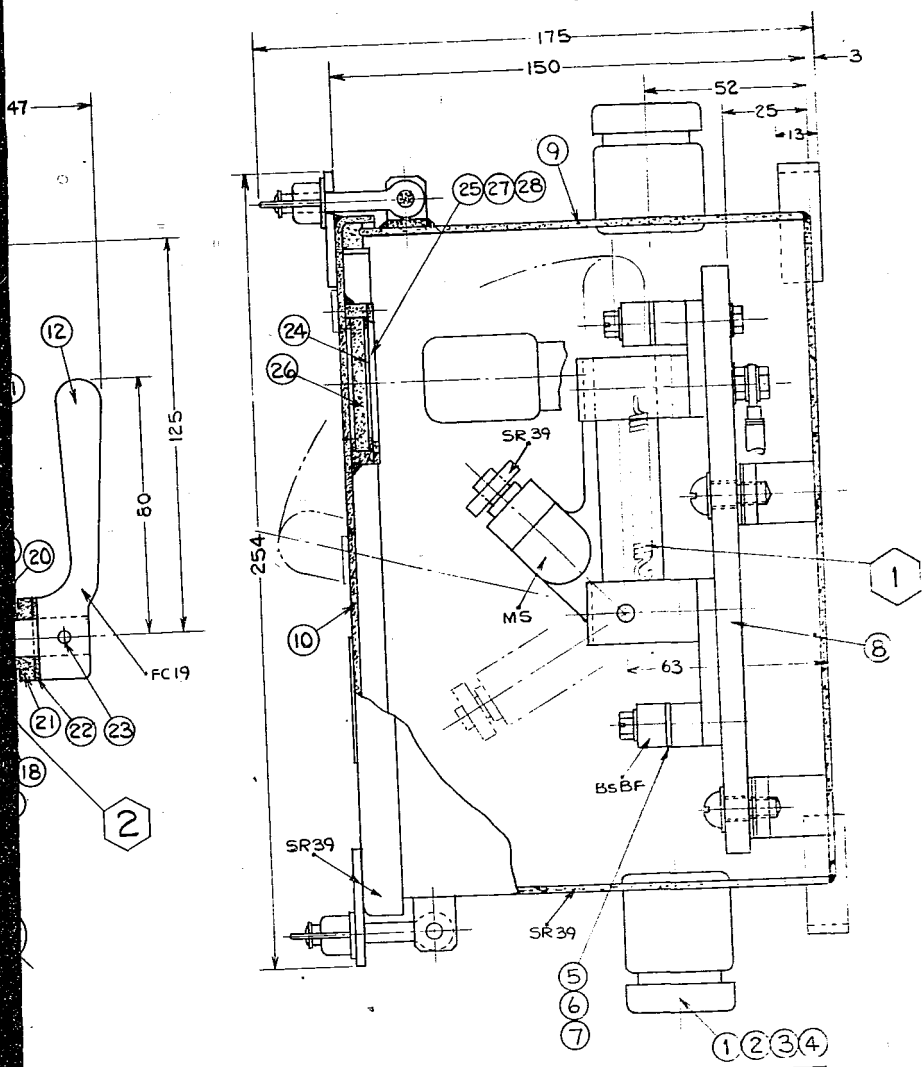

WIRING DIAGRAM

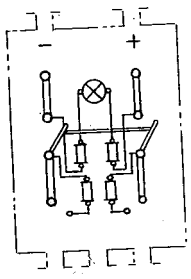

3

	INSTRUMENTS, MACHINES, MATERIALS		NOTE
1	NAVAL STANDARD BOX-TYPE WATER PROOF FOR ELECTRIC WIRE HOLE		
2	"		
3	"		
4	"		
5	NAVAL STANDARD TERMINAL SOCKET, NO. 1		
6	"		
7	"		
8	ASS. DIAGRAM ON THE PLATE; SEE ILLUSTRATION NO. A203559		
9	CASE; " NO. A203554		
10	COVER; " NO. A203512		
11	MOVE LIMITING DEVICE, SEE ILLUSTRATION NO. 257743		
12	HANDLE " NO. A214782		
13	NAVAL STANDARD SAFETY FUSE; FORM NO. 1 INTENDUSA	2	
14	NAVAL STANDARD BI-TYPE NEON TUBE; FORM NO. 1	1	
15	" " "	1	
16	NAVAL STANDARD BI-TYPE SOCKET NO. 2; FORM NO. 1	1	
17	PACKING	1	532313
18	FLANGE	1	A506149
19	PACKING	3	
20	BUSHING SEAT FOR PACKING	1	232314
21	PIN	1	A506150
22	BRASS WASHER	1	1017-3
23		1	2316-4
24	PACKING	2	
25	TIGHTENING (OR BINDING) PLATE	1	
26	CLEAR GLASS; THICKNESS 3.5	1	
27	FLAT IRON SCREW 4X8	4	
28	STANDARD SPRING WASHER 4	4	
29	ROUND IRON SCREW 3X20	4	
30	NUT 3	4	
31	SMALL WASHER 3	4	
32	STANDARD SPRING WASHER 3	4	
33	RUBBER TAPED WIRE FOR LOW TENSION	1	

...re 39
...R SWITCH, 60 A

S-01-5

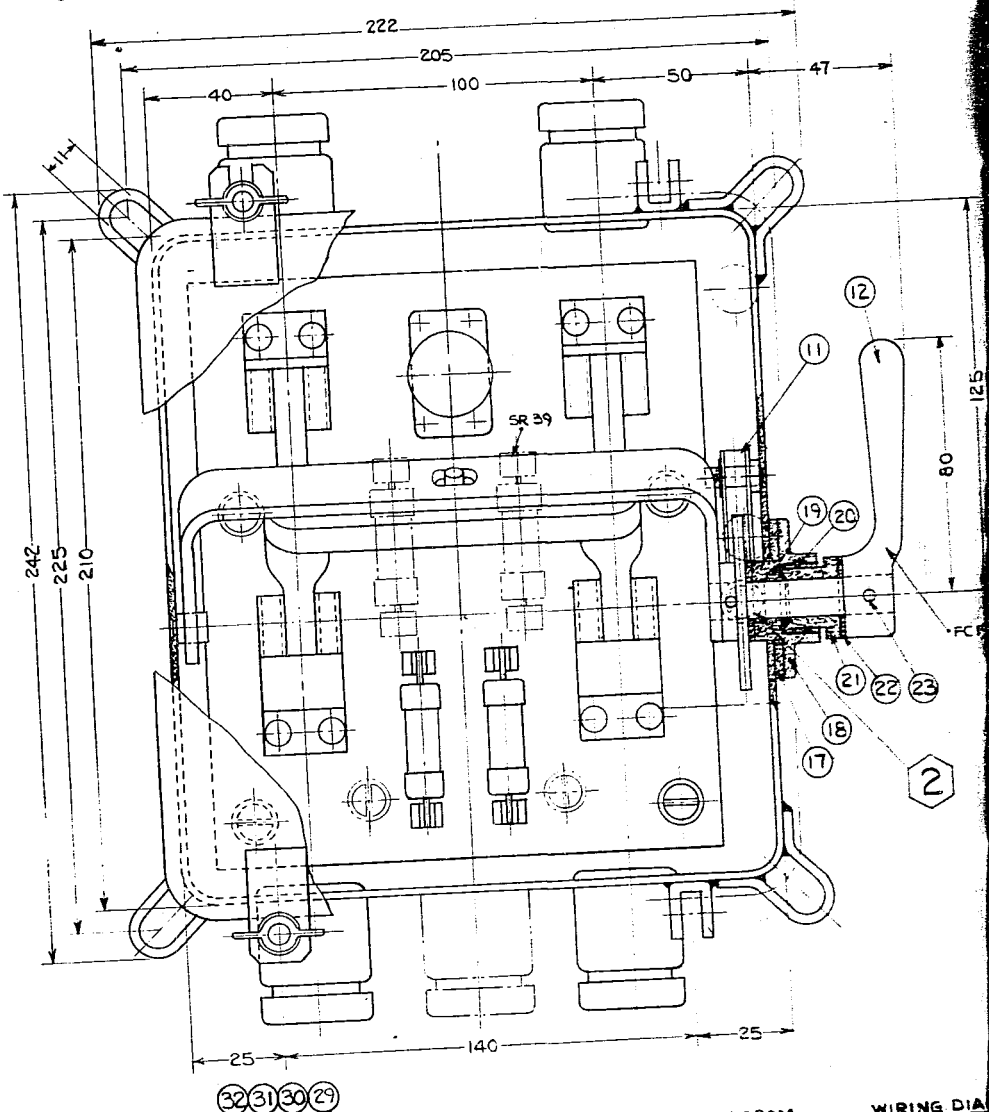

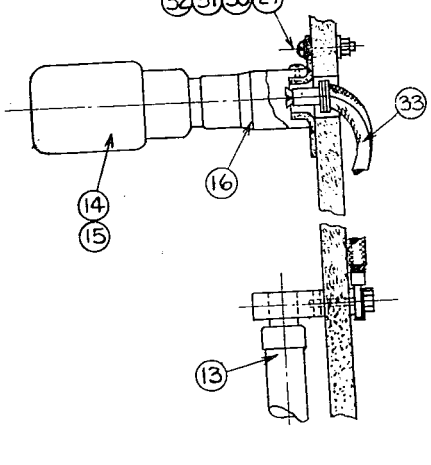

WIRING DIAGRAM

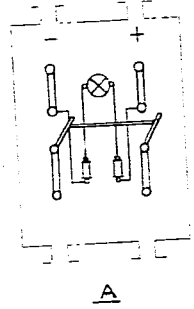

A

WIRING DIA

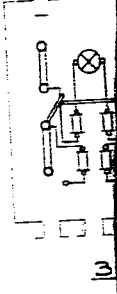

3

Figure 39
D.C. MOTOR SWITCH, 6

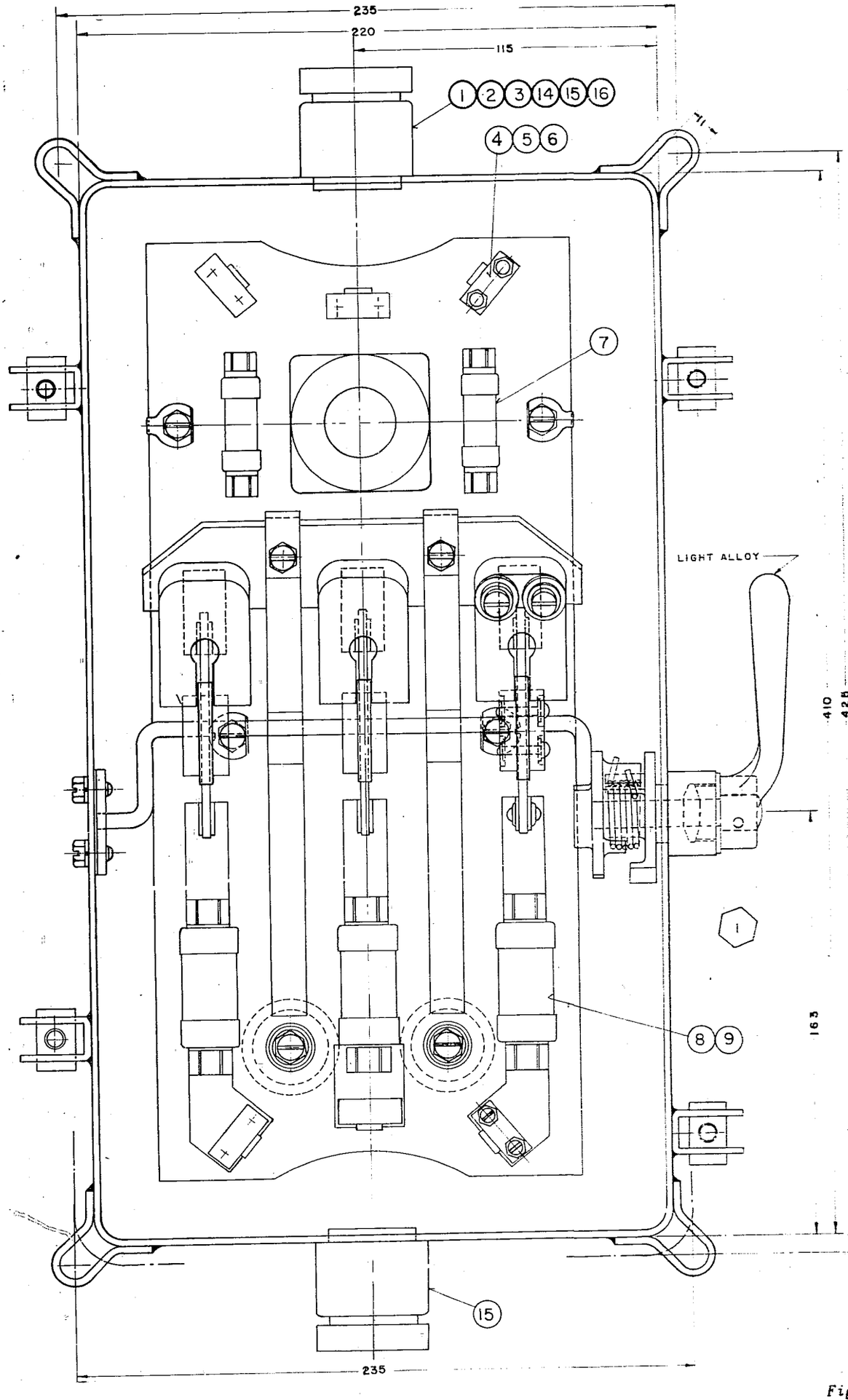

Figure
A.C. LINESTAR

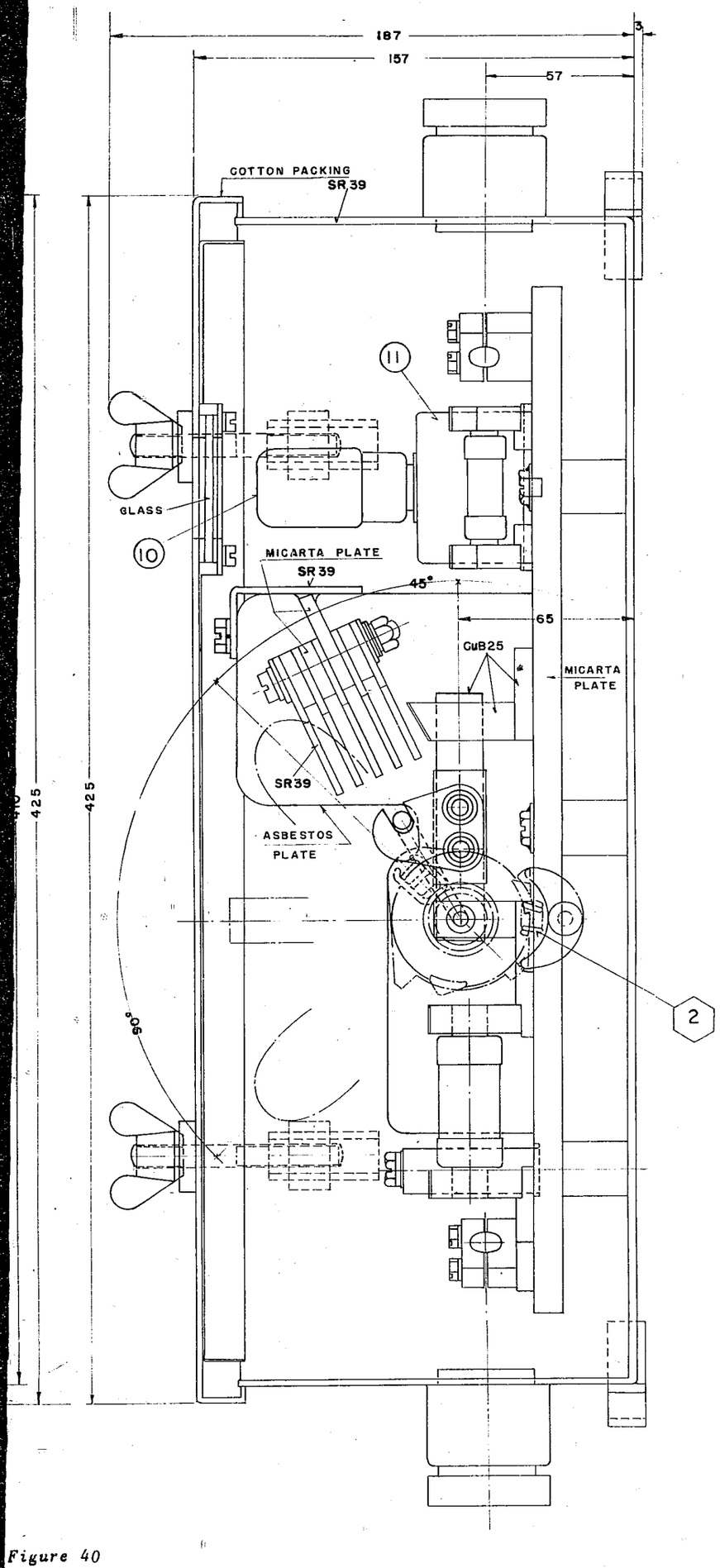

1	NAVAL STANDARD FRAME WIRE CHINK WATER-PROOF UNIT 3A
2	NAVAL STANDARD FRAME WIRE CHINK WATER-PROOF UNIT 4A
3	NAVAL STANDARD FRAME WIRE CHINK WATER-PROOF UNIT 5A
4	NAVAL STANDARD N TERMINAL AND SOCKET 1 MODEL
5	NAVAL STANDARD N TERMINAL AND SOCKET 2 MODEL 1 MARK
6	NAVAL STANDARD N TERMINAL AND SOCKET 2 MODEL 2 MARK
7	SAFETY FUSE 1 MODEL ALTERNATING CURRENT 440 INTERIOR PART A
8	SAFETY FUSE 1 MODEL ALTERNATING CURRENT 440° INTERIOR PART A
9	SAFETY FUSE 2 MODEL ALTERNATING CURRENT 440° INTERIOR PART A
10	BI TYPE NEON-LAMP 1 MODEL 100° PURPOSE
11	SOCKET WITH TRANSFORMER (TRANSFORMER RATIO 100/440)
12	CONNECTING WIRE. LOW VOLTAGE LINE (SIZE 501) 1-1M
13	CONNECTING WIRE, LOW VOLTAGE LINE (SIZE 501) 2-1M
14	NAVAL STANDARD FRAME WIRE CHINK WATER-PROOF 4B
15	" " " " " 3B
16	" " " " " 2B

INTERIOR, WIRING DIAGRAM

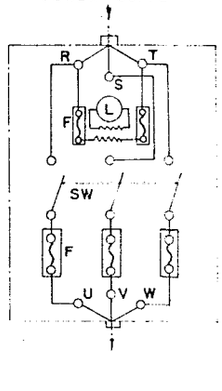

Figure 40
NESTARTER, 60 A

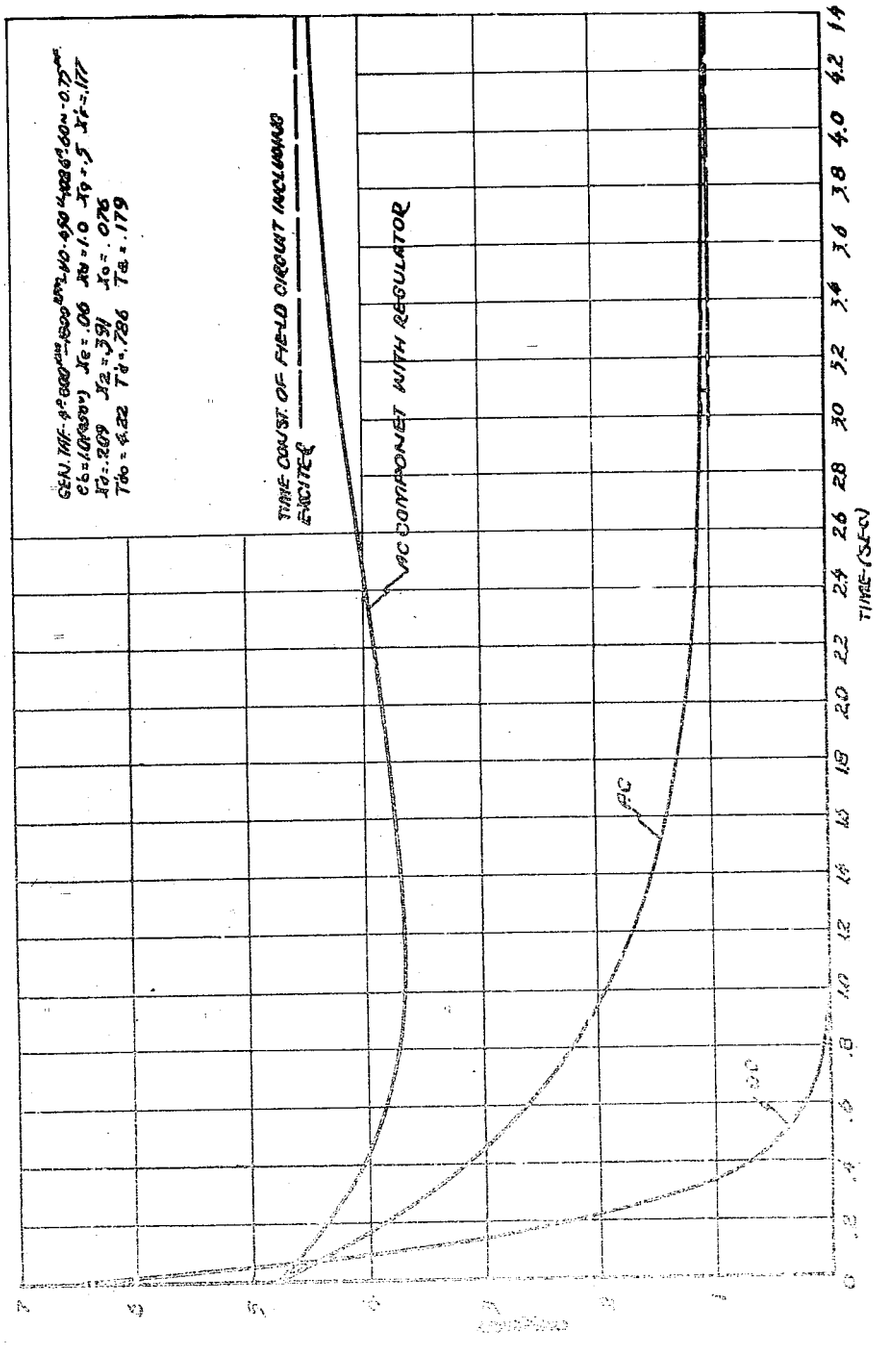

Figure 41
A.C. GENERATOR DECREMENT CURVES,
NO LOAD, WITHOUT REGULATOR

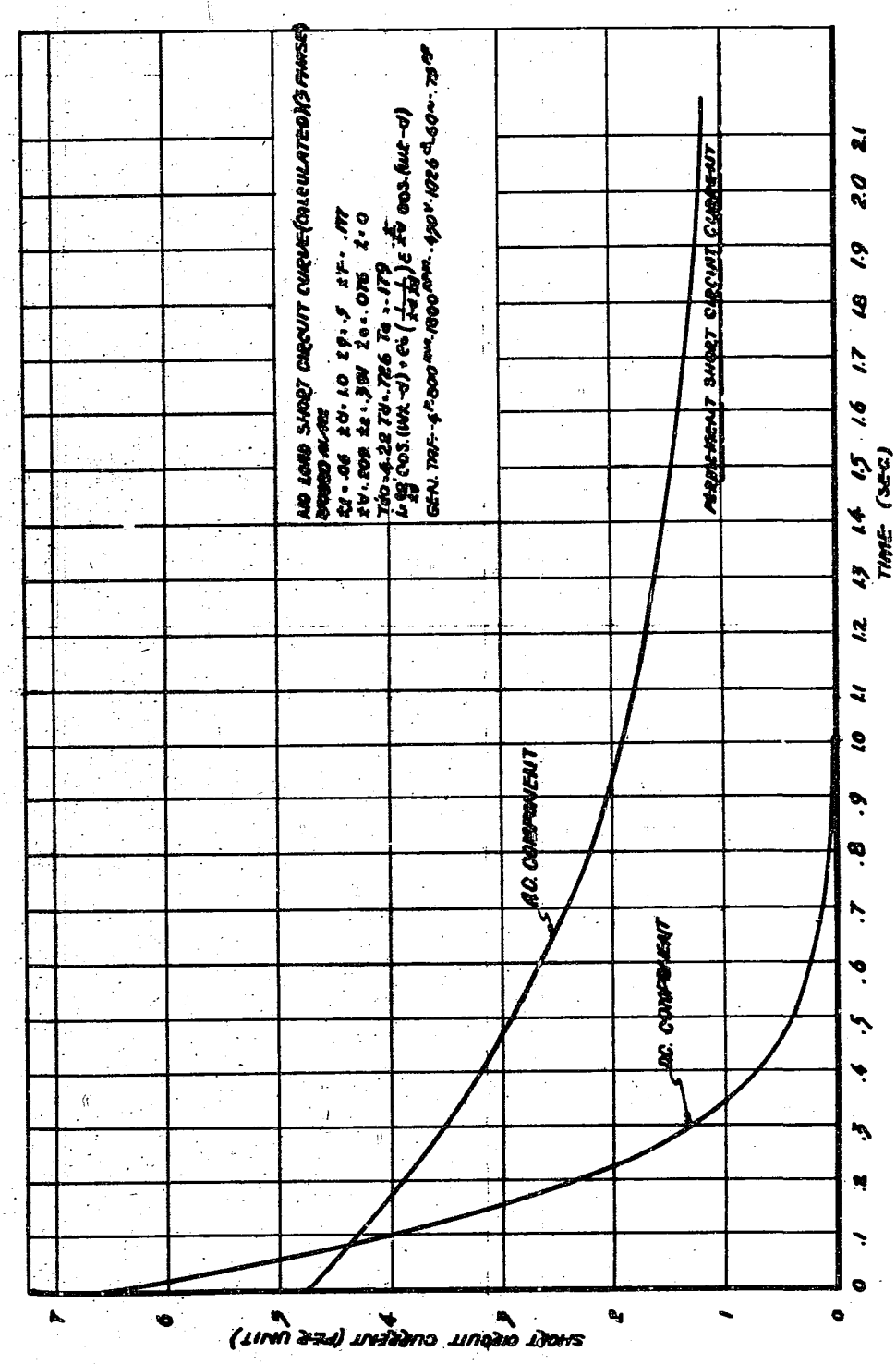

Figure 42
A.C. GENERATOR DECREMENT CURVES,
NO LOAD, WITHOUT REGULATOR

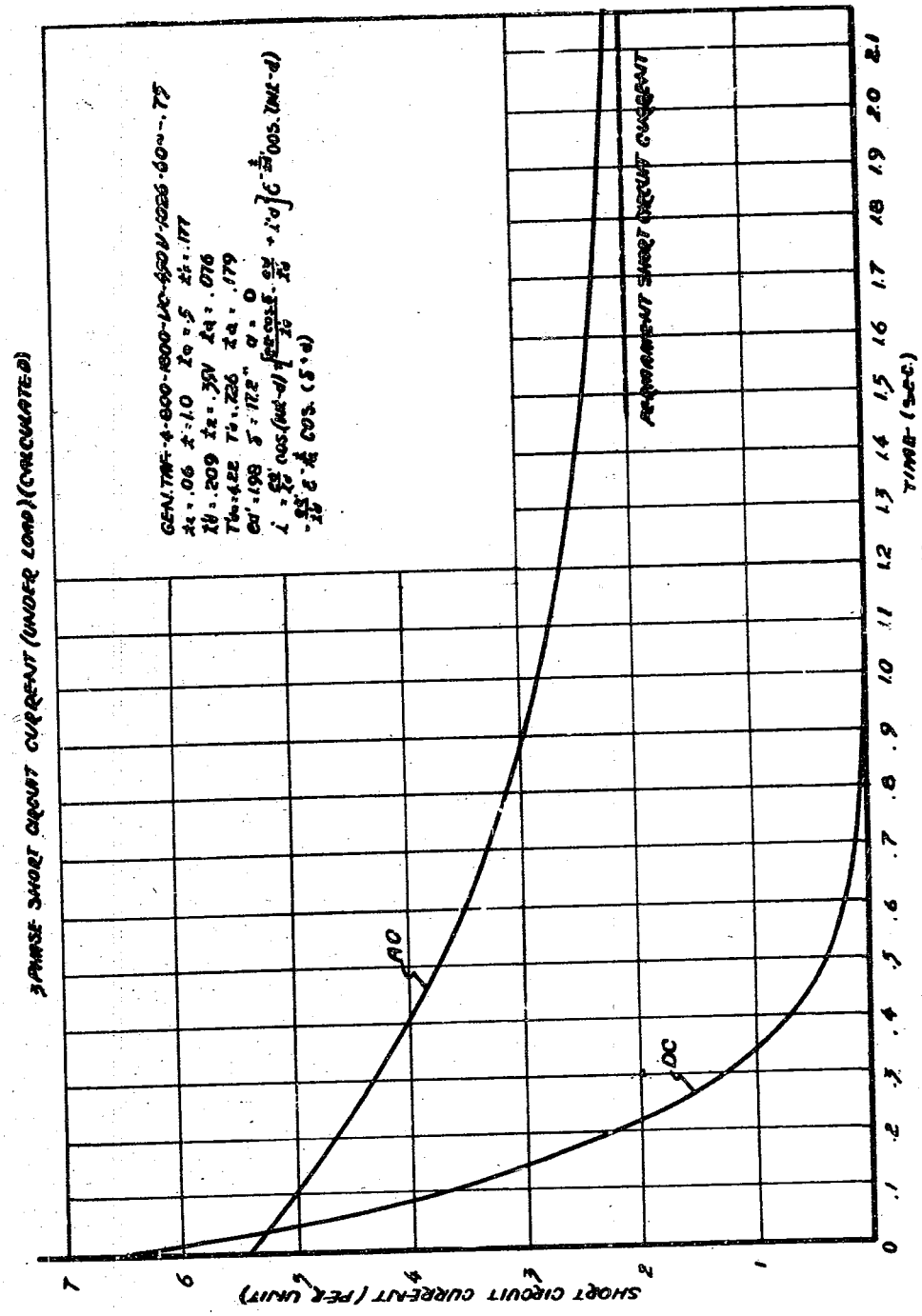

Figure 43
A.C. GENERATOR DECREMENT CURVES,
FULL LOAD, WITHOUT REGULATOR

7. Miscellaneous

a. Navy Specifications

Navy specifications are divided into two classes. General specifications cover standard apparatus and materials. Special specifications were issued in connection with specific contracts and modified the general specifications.

The general specifications were issued by the Navy Ministry. However, when apparatus was built by a navy yard detailed manufacturing drawings and specifications were issued by the yard.

Both the Navy Ministry and the navy yards issued special specifications for particular vessels. The navy yards issued such specifications when they had cognizance over the design of a given vessel.

In general the apparatus and material specifications were not written in as much detail as similar specifications issued by the U. S. Navy.

b. Design Committees and Standardization

Several design committees consisting of representatives of the Navy and the various manufacturers were formed. These committees reviewed the design and test data for various pieces of apparatus as manufactured by the different companies and agreed as to which features of each design were the best. A standard design was then agreed upon and drawings were prepared by the Navy Ministry. These drawings were given to the manufacturers who prepared their own detail manufacturing drawings from them. The various component parts were supposed to be identical. However, the manufacturing tolerances were such that it is doubtful if all parts made by the same company were interchangeable and it is almost certain that parts made by different companies were not interchangeable.

Also in hardly any case was the idea of a standard design fully exploited. For example the 450 volt A.C. circuit breaker was built only by SHIBAURA. It appears that this also was true of all apparatus. No standardized apparatus was built by more than one company. This was apparently due to the fact that many of the standardized designs were not agreed upon until very late in the war and there was insufficient demand to require the productive facilities of more than one company.

c. Type Approval

Formal type approval of every new device was required before it could be used on a contract. This required from one to two years depending upon the complexity of the device. If a device failed to pass even a few of the tests, it was necessary to change the design and resubmit the device for retest. Tentative approvals apparently were not given.

These requirements were not relaxed even for apparatus designed by a joint committee of Navy and company representatives. Any change in design, no matter how minor, had to be approved by the Navy Ministry before it could be put into effect.

d. Drawing Approval

All switchboard general drawings and diagrams had to be approved by the Navy before manufacturing could commence. This usually took from one to three months, however, many of the larger manufacturers took

their drawings to TOKYO, discussed them with the Navy, and received informal approval. Manufacturing was then begun in advance of the receipt of formal approval. There were few cases in which the formal approval did not agree in all essential details with the informal approval.

e. Navy Inspection

Navy inspectors were under a special division of the Navy Ministry. However, for technical problems they were responsible to the chiefs of the various technical departments of the Navy Ministry. These inspectors were allowed to use some degree of judgment in their interpretation of the various design specifications.

f. High Power Laboratories

The high power laboratory of the SHIBAURA Electric Co. Ltd. at TSURUMI was the only one capable of testing high interrupting capacity circuit breakers. Even this laboratory was much smaller than the Westinghouse and General Electric laboratories. To a large extent it appears that this lack of adequate testing facilities was responsible for the limited knowledge of selective tripping of circuit breakers and fuses and other high current phenomena.

g. Shock Testing

The shock testing machine, used by the Japanese (see Figure 44) is similar, in hammer weight and in height from which the hammer was dropped, to the U. S. Navy 150 foot-pound shock machine. The design of the stand and anvil plate, however, is more like the U. S. Navy 2000 foot-pound shock machine. The anvil plate, which is spring mounted, can be struck from the top or rear by a 20 kilogram weight falling one meter.

All new designs of apparatus were tested on this shock machine and spot checks of production also were made. This was not considered a destruction test and if the apparatus passed, it was used.

The hammer was dropped from a height of one meter only for the heavier and more rugged apparatus. For example, the height was 300mm from the rear and 500mm from the top for electrical measuring instruments.

Apparatus was tested when energized and when de-energized and in each operating position (such as open and closed). Oscillographs were used to determine whether or not contacts opened or closed under shock.

Chipping or distortion of parts which did not affect performance was permitted. After the test the devices were recalibrated and in order to be satisfactory had to be within the original accuracy limits.

The test requirements are given in the various apparatus specifications.

h. Vibration Testing

All electrical equipment such as circuit breakers, voltage regulators, relays and instruments were given vibration tests. These tests were at 1000 cycles per minute and one mm amplitude.

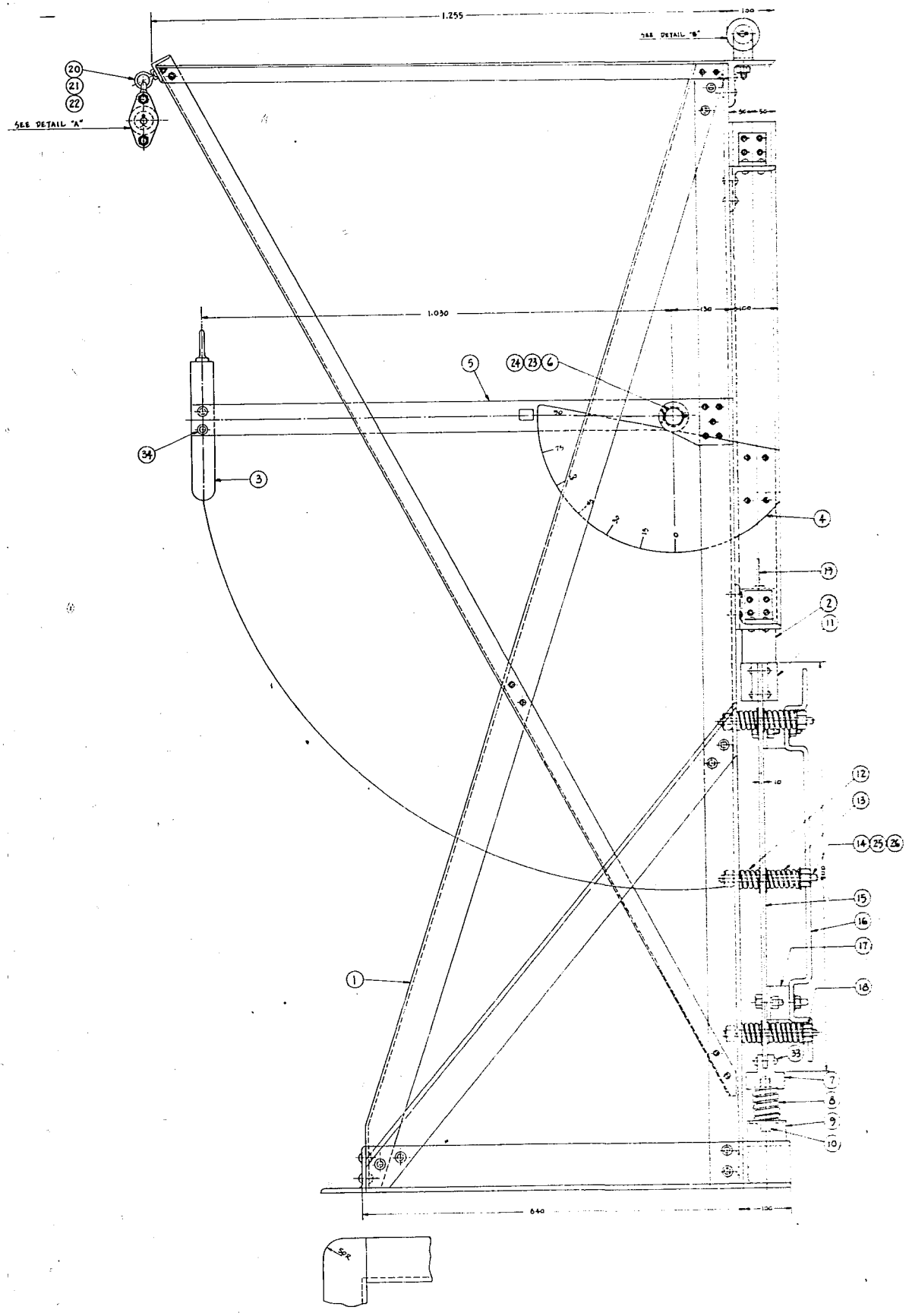
1.255
SEE DETAIL "B"
20
21
22
SEE DETAIL "A"
1.030
5
24
23
4
34
3
4
19
2
11
12
13
14
25
26
15
16
17
18
1
33
7
8
9
10
640
50°

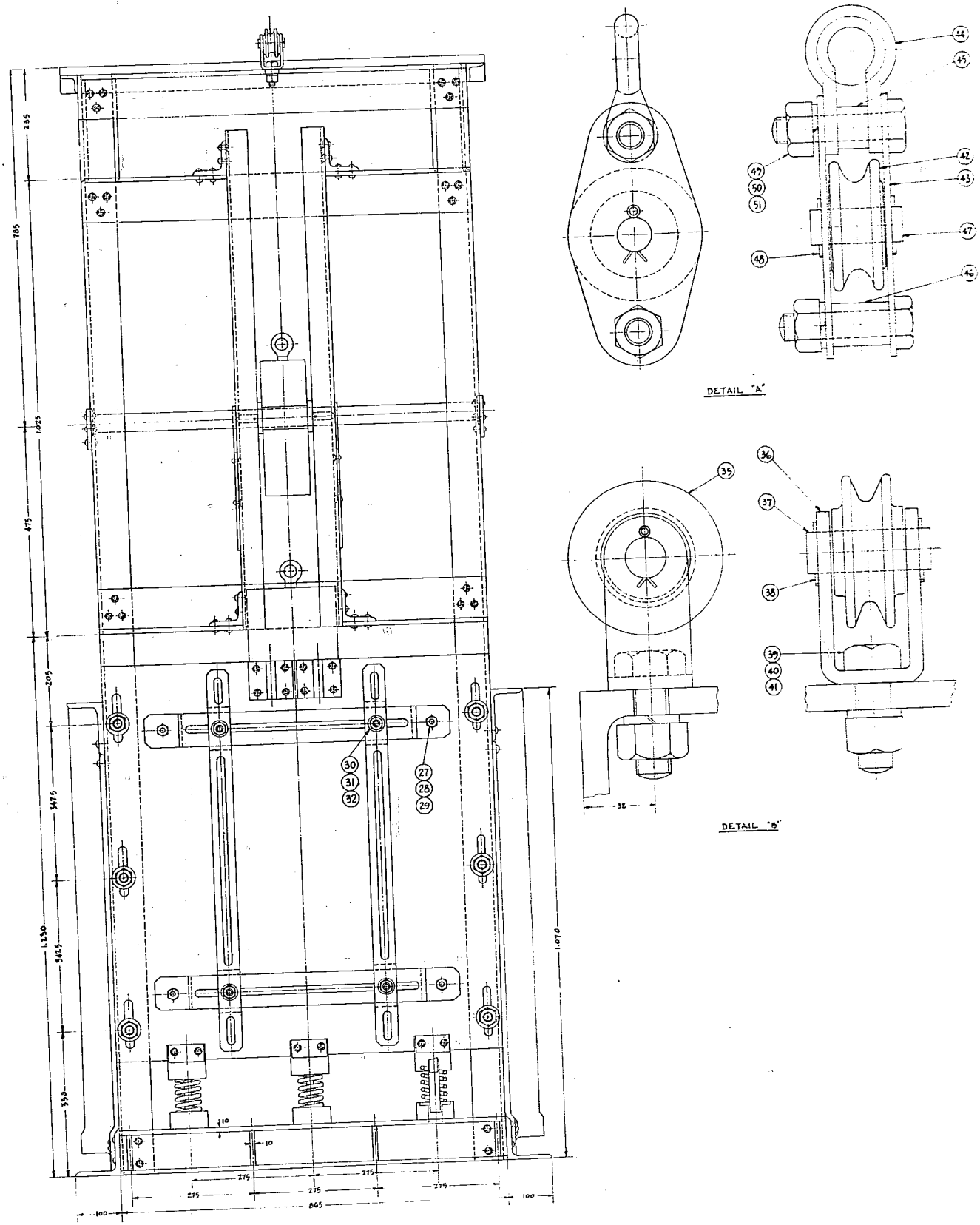

Figure 44
SHOCK TESTING MACHINE

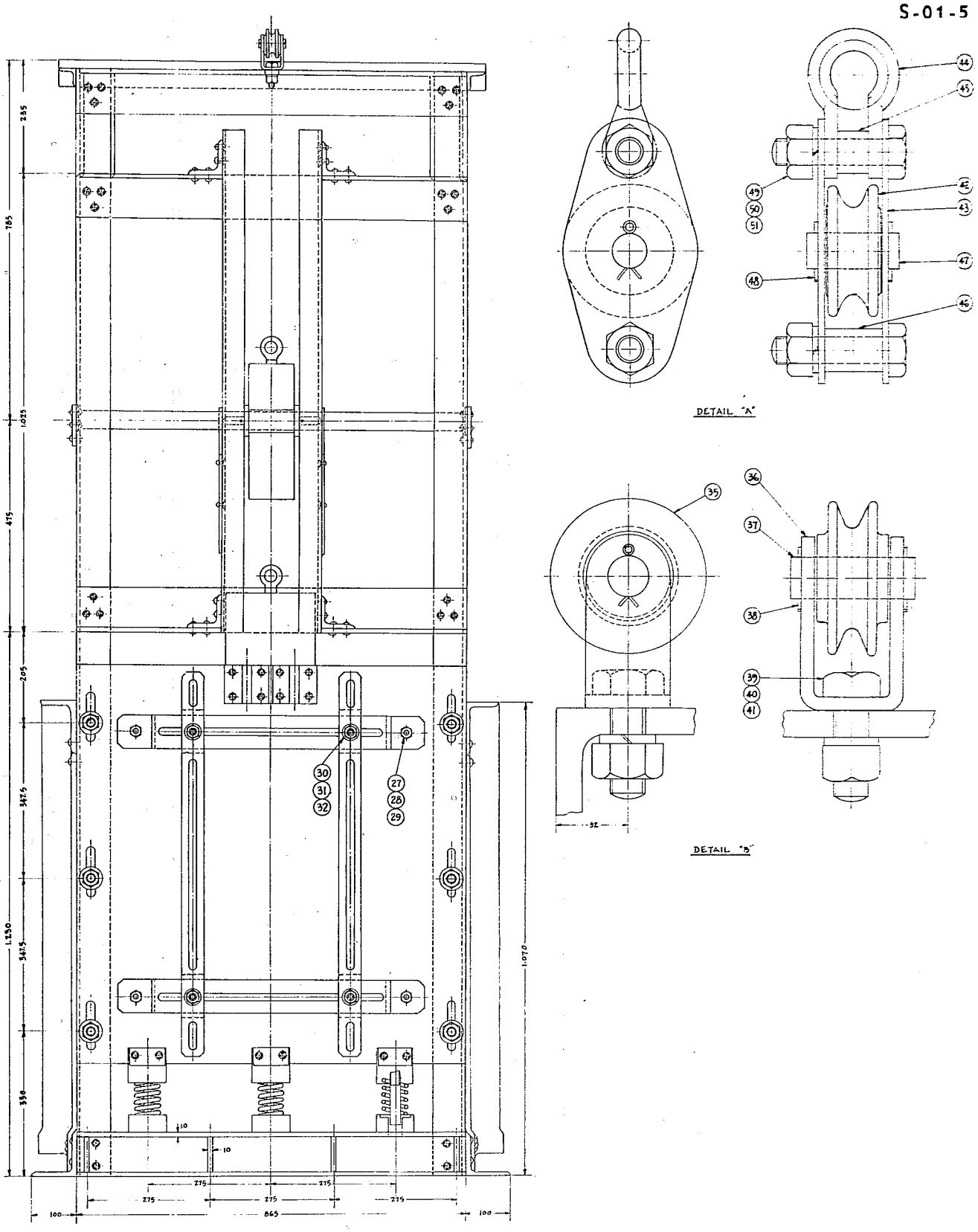

Figure 44
SHOCK TESTING MACHINE

i. Short Circuit Studies

Very few of the Japanese ships had sufficient generating capacity to require much attention being given to short circuit studies. In addition, the fact that all generators were operated independently during battle conditions reduced the maximum possible short circuit currents.

Tests on ships rather than calculations were the principal sources of such information. These tests indicated that the short circuit currents obtained were considerably smaller than the maximum calculated value due to the high circuit and apparatus impedances.

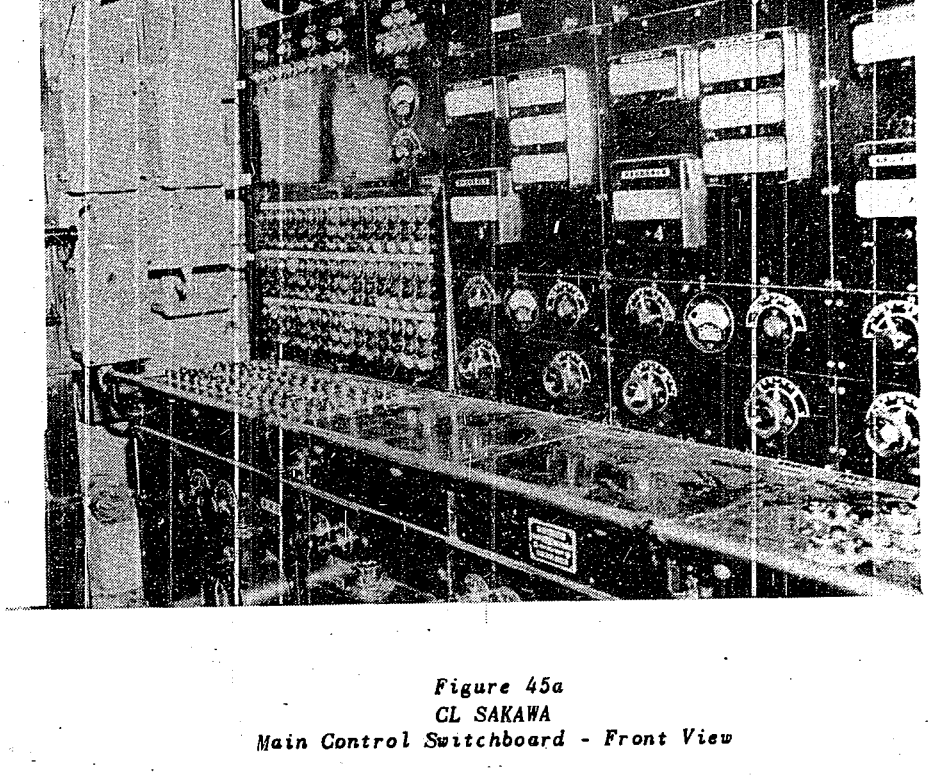

Figure 45a
CL SAKAWA
Main Control Switchboard - Front View

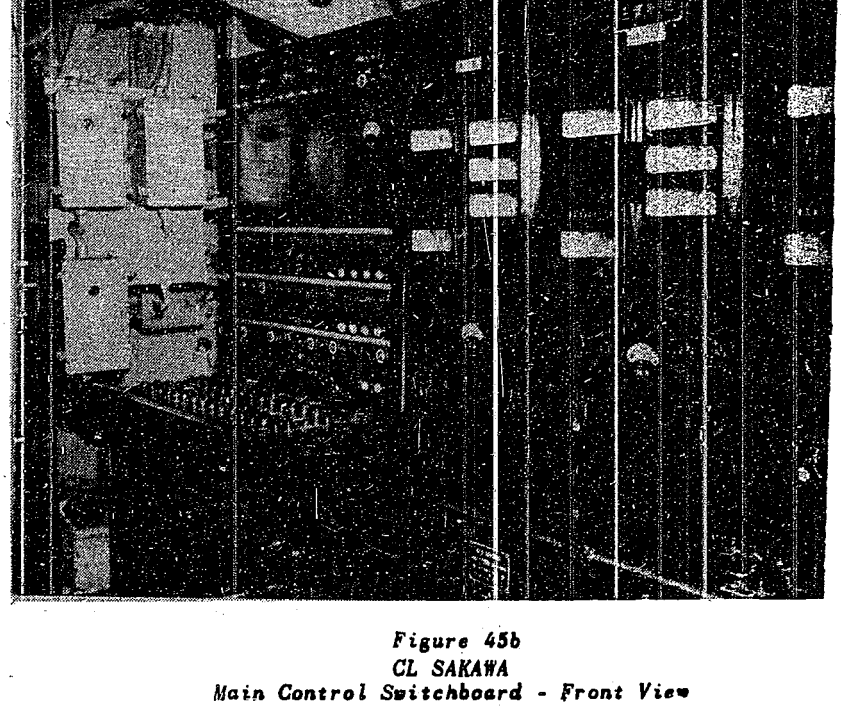

Figure 45b
CL SAKAWA
Main Control Switchboard - Front View



Figure 45c
CL SAKAWA
in Control Switchboard - Front View

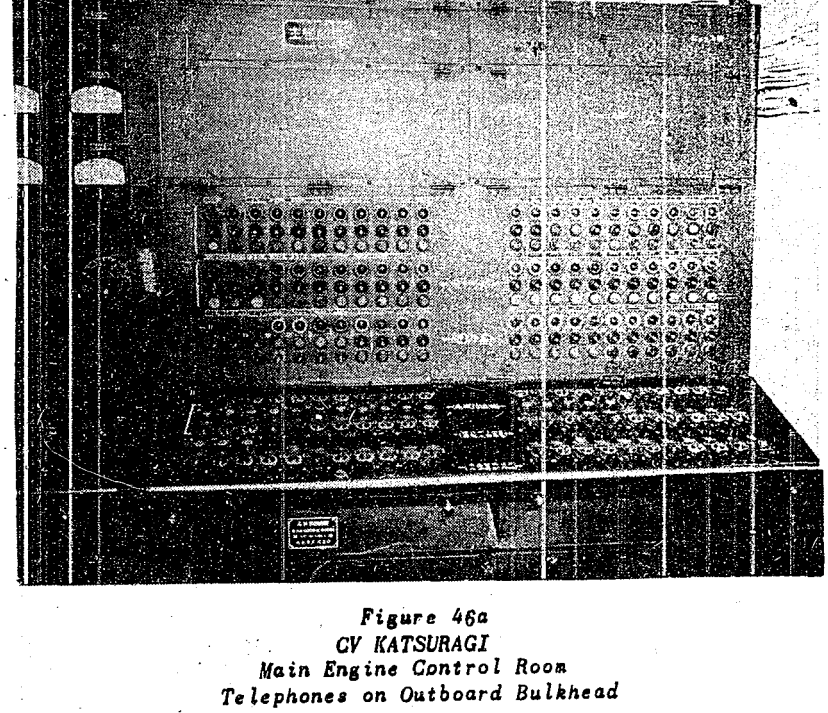

Figure 46a
CV KATSURAGI
Main Engine Control Room
Telephones on Outboard Bulkhead

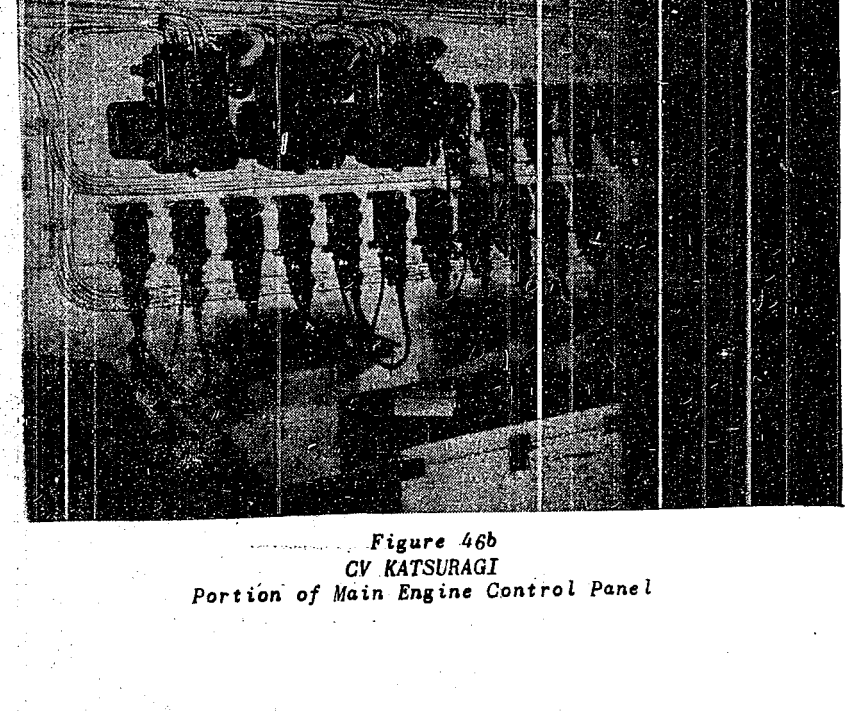

Figure 46b
CV KATSURAGI
Portion of Main Engine Control Panel

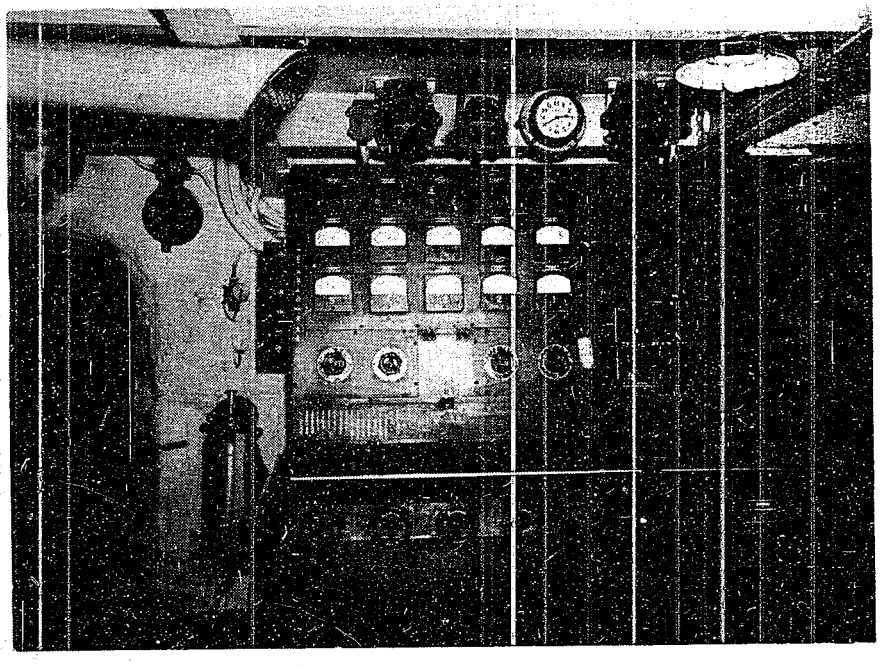

Figure 46c
CV KATSURAGI
Main Engine Control Panel

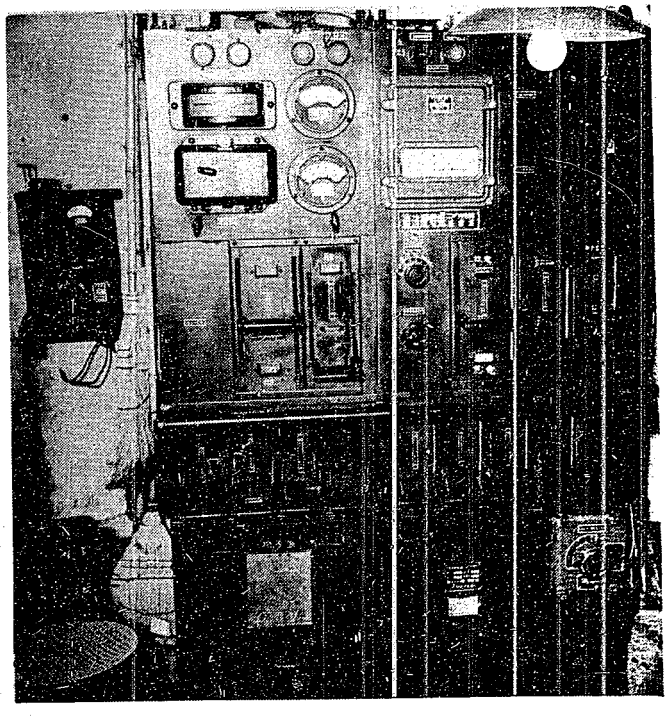

Figure 47
CV KATSURAGI
Battery Charging Switchboard - Front View

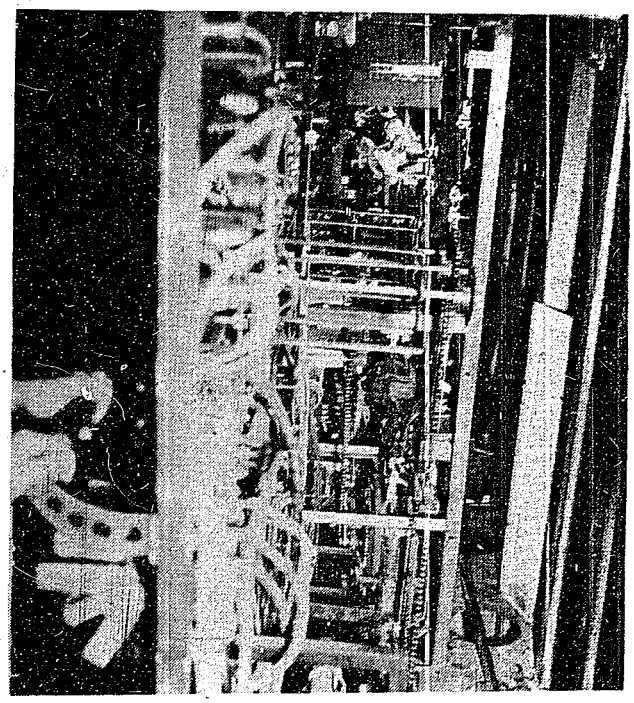

Figure 48a
DD OTAKE
Ships Service Switchboard

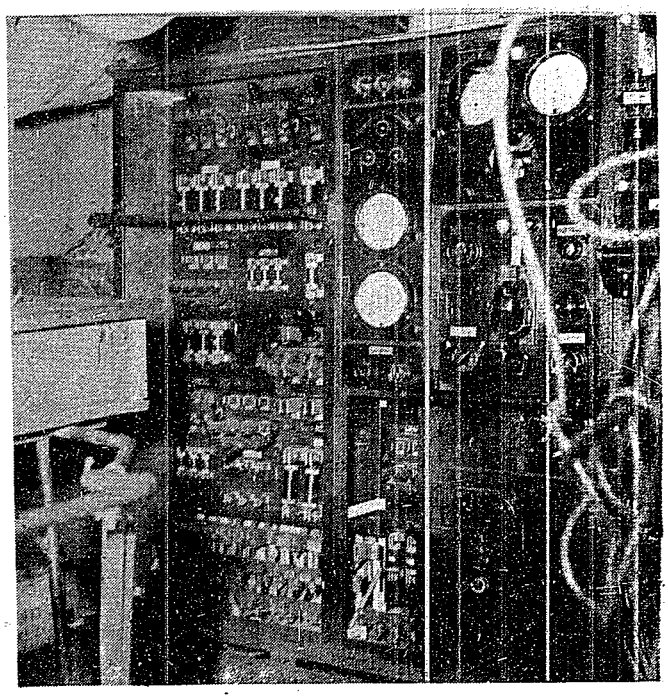

Figure 48b
DD OTAKE
Ships Service Switchboard

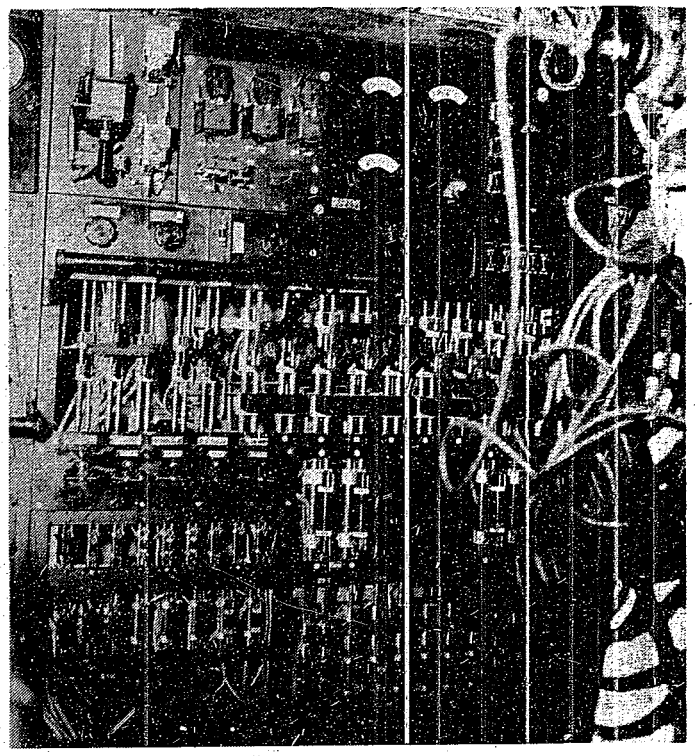

Figure 48c
DD OTAKE
Ships Service Switchboard - Forward

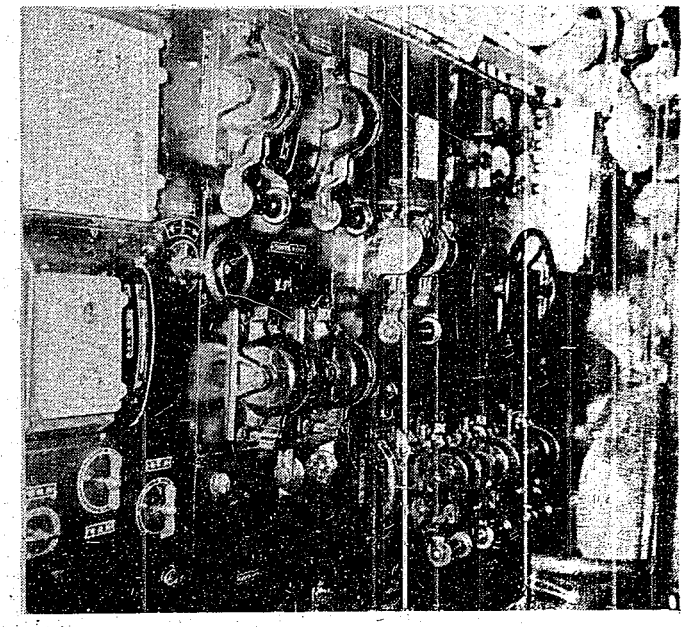

Figure 49
SS HA 205
Control Board - Front View



Figure 50
CV KATSURAGI
Distribution Panel,
Fused - Front View

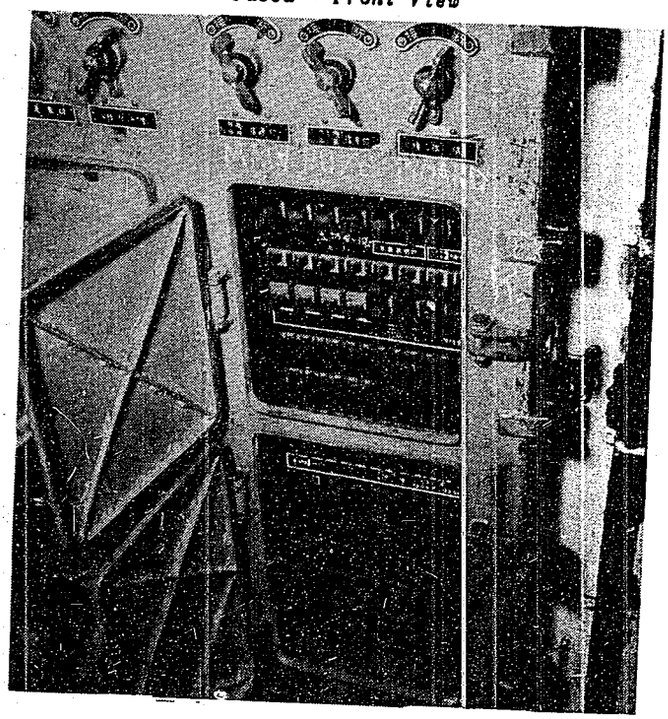

Figure 51
CV KATSURAGI
Distribution Panel,
Fused - Interior View

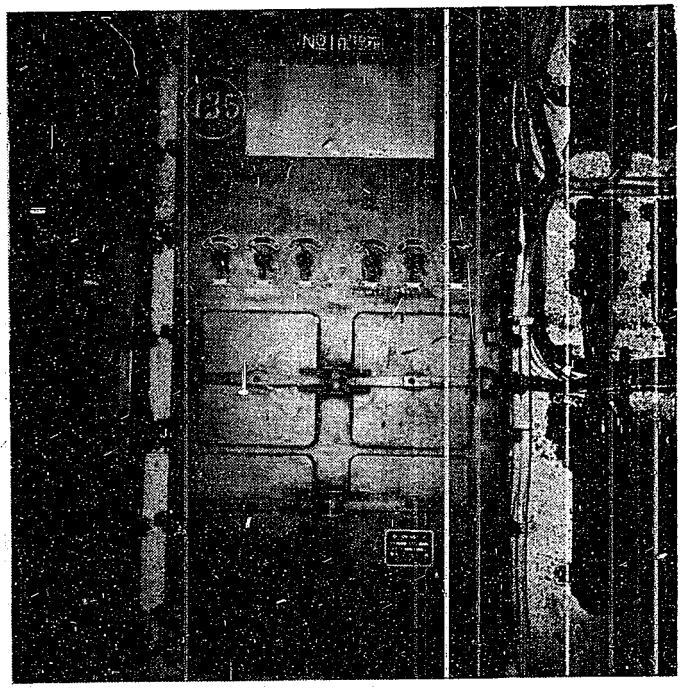

Figure 50
CV KATSURAGI
Distribution Panel,
Fused - Front View

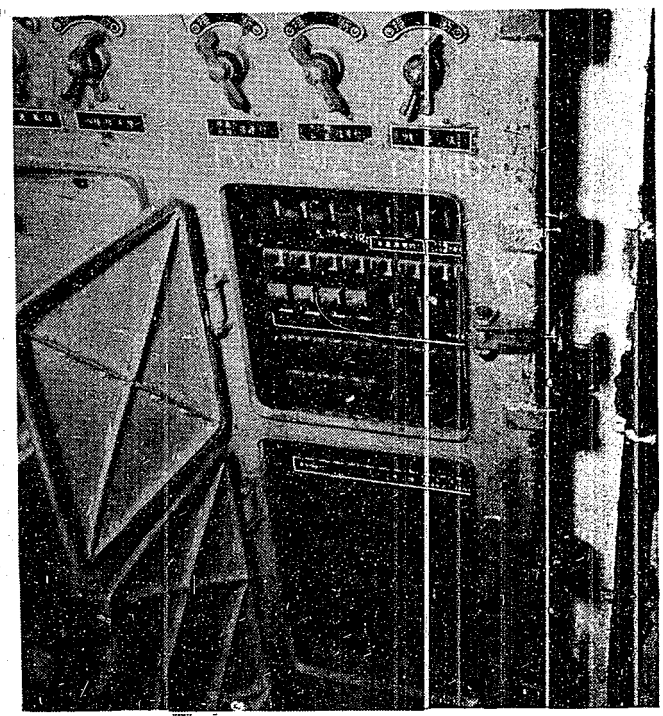

Figure 51
CV KATSURAGI
Distribution Panel,
Fused - Interior View

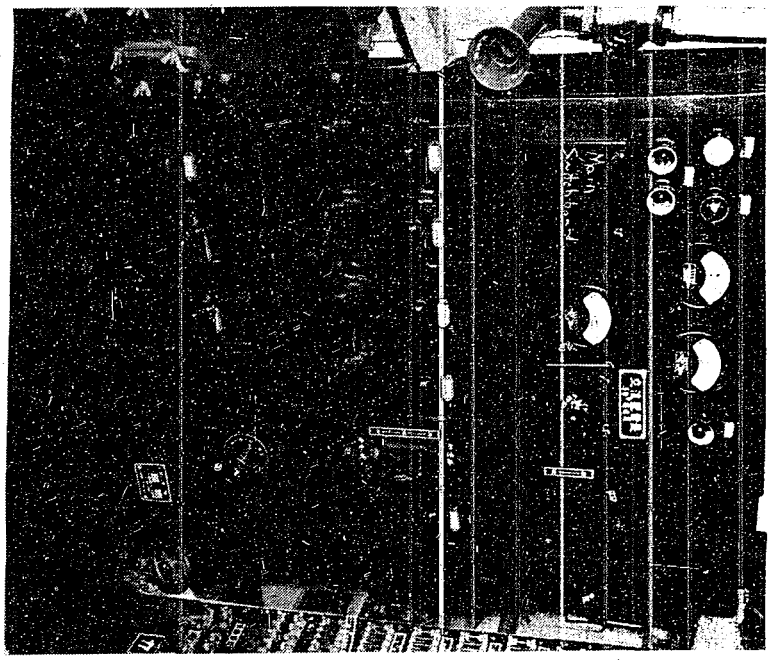

Figure 52a
CV KATSURAGI - IC ROOM
Battery Charging Panel

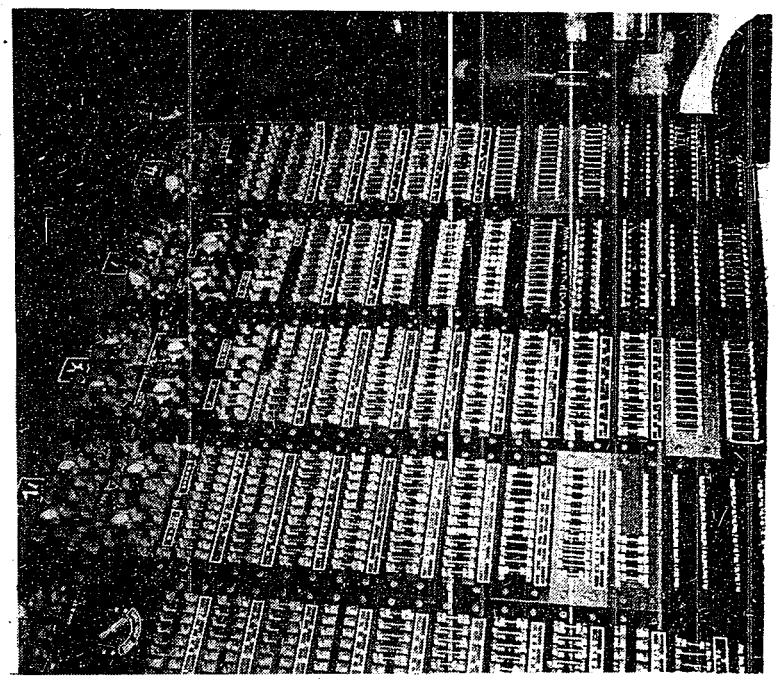

Figure 52b
CV KATSURAGI
IC ROOM - IC BOARD

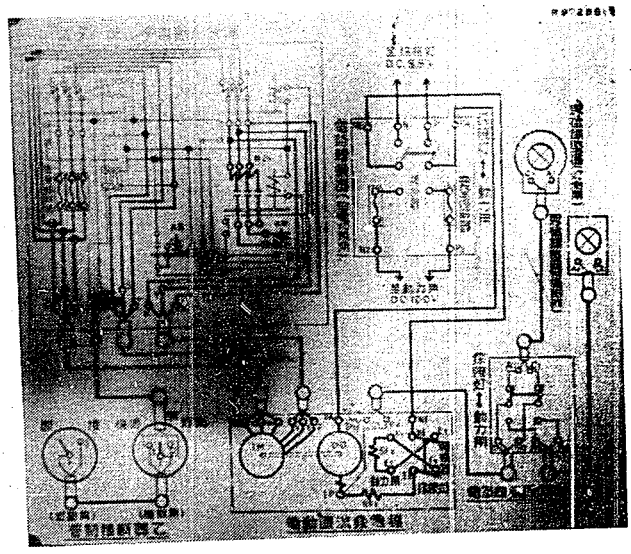

Figure 53
DE OTAKI
Controller for Searchlight Motor-Generator
Instruction Plate

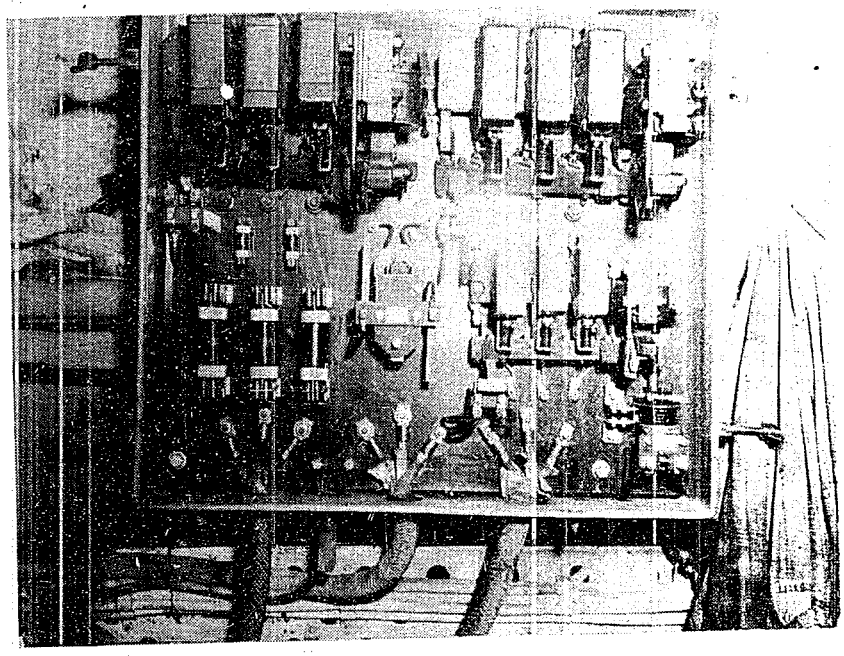

Figure 54
DE OTAKI
Controller for Searchlight Motor-Generator
Interior View

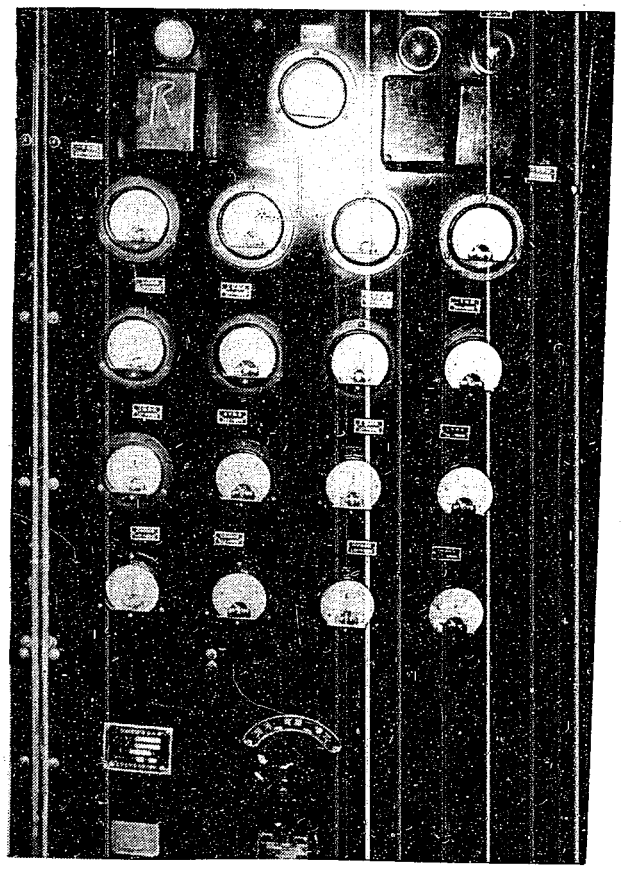

Figure 55a
CV KATSURAGI
Switches for Rocket Firing Current

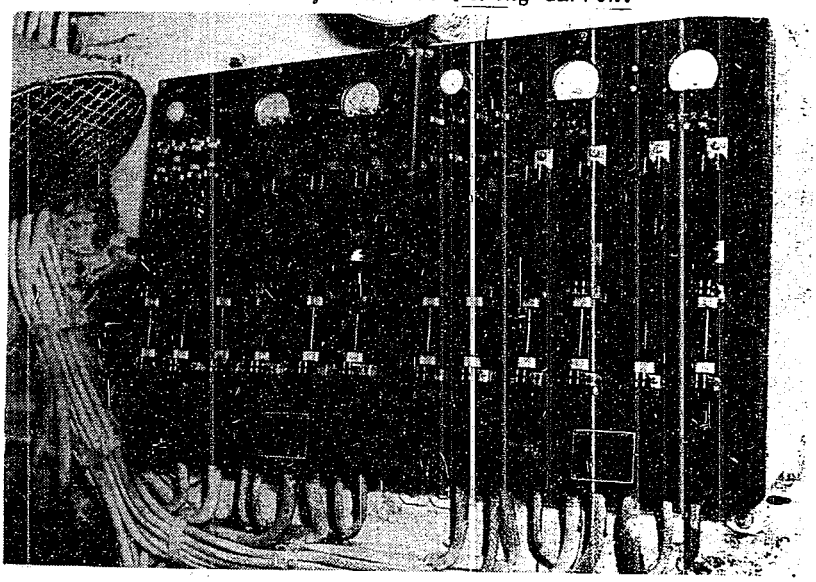

Figure 55b
CV KATSURAGI
Electric Panel for Control of Rocket Firing

Part II
LIGHTING FOR ILLUMINATION, SIGNALLING AND NAVIGATION

A. INSTALLATION ON BOARD SHIP

1. General Comments

The general illumination on Japanese Navy vessels is poor. There are insufficient lighting fixtures, the fixtures are of poor quality and inefficient, the lamps are of too low candle power, and little care is exercised in properly locating fixtures. The result is that officers and crew live and work, except for those spaces with outside illumination, in a region of perpetual gloom. It is estimated, for example, that the average intensity in the machinery spaces is 2 foot candles and the intensity in the plotting room on the computer is approximately 5 foot candles. No standards for quality of illumination have been established. Incandescent lighting is generally used throughout the ship with fluorescent lighting occasionally used in living spaces and important operating spaces. Small operating economies are attempted by breaking down the lighting circuits in such a manner that control of essential daytime and night lighting and lighting for operational and non-operational conditions is centered at the switchboard.

Navigation lights conform to the International Rules of the Road.

The allowance of all ships included many lights, blinkers for transmitting CW, and infra-red signalling equipment. Japanese vessels carried four arrays of non-pulsing colored lights which ostensibly were used only for signals relating to the maneuvering of a task force. These arrays could be arranged for code recognition and, in spite of allegations to the contrary by the Japanese interrogated, there appears to be sufficient evidence from wartime night operations of Japanese Navy vessels to be certain that colored light arrays were used for recognition signals. Recognition from ship to ship and ship to plane was allegedly by means of a single blinker mounted on the bridge which could be fitted with colored lenses. This obviously was inadequate, as admitted by the Japanese interrogated.

2. Lighting

The most recent design of the lighting circuits on a Japanese vessel involved essentially four circuits:

a. Normal lighting

b. Work lighting

c. Alarm lighting

d. Emergency lighting

Normal lighting is the general lighting throughout the ship. The circuit extended to all compartments in the vessel where lighting is required. This circuit is, in general, similar to the ship's service lighting circuit in a U. S. vessel. The normal lighting is in some cases broken down into two circuits: ordinary lighting and night lighting. The night lighting circuit serves all normal lighting which must remain on all night.

The work lighting is a lighting circuit which supplements the normal lighting in the essential machinery spaces of the vessel, such as the anchor windlass compartment, the boiler and engine rooms and the steering engine

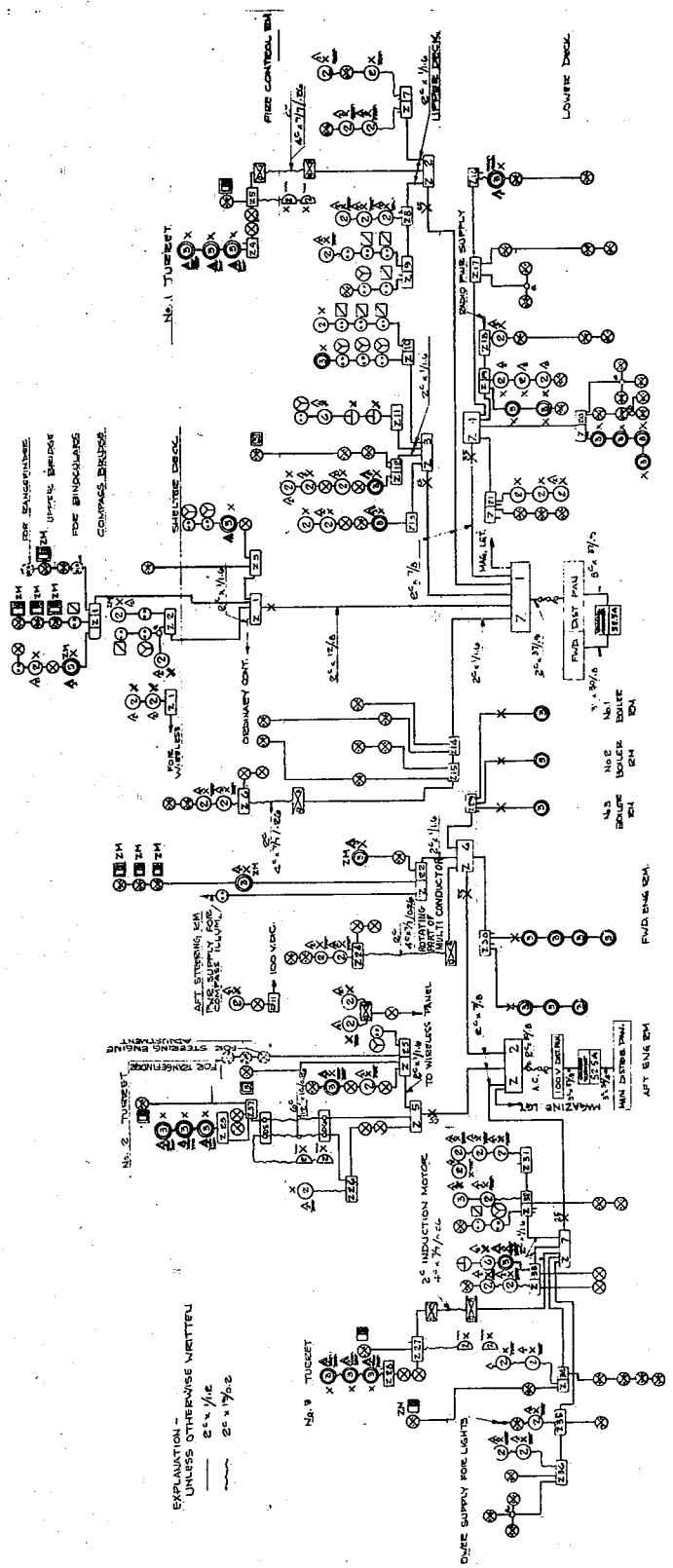

Figure 56
DD HATSUKAZE NORMAL LIGHTING WIRING DIAGRAM

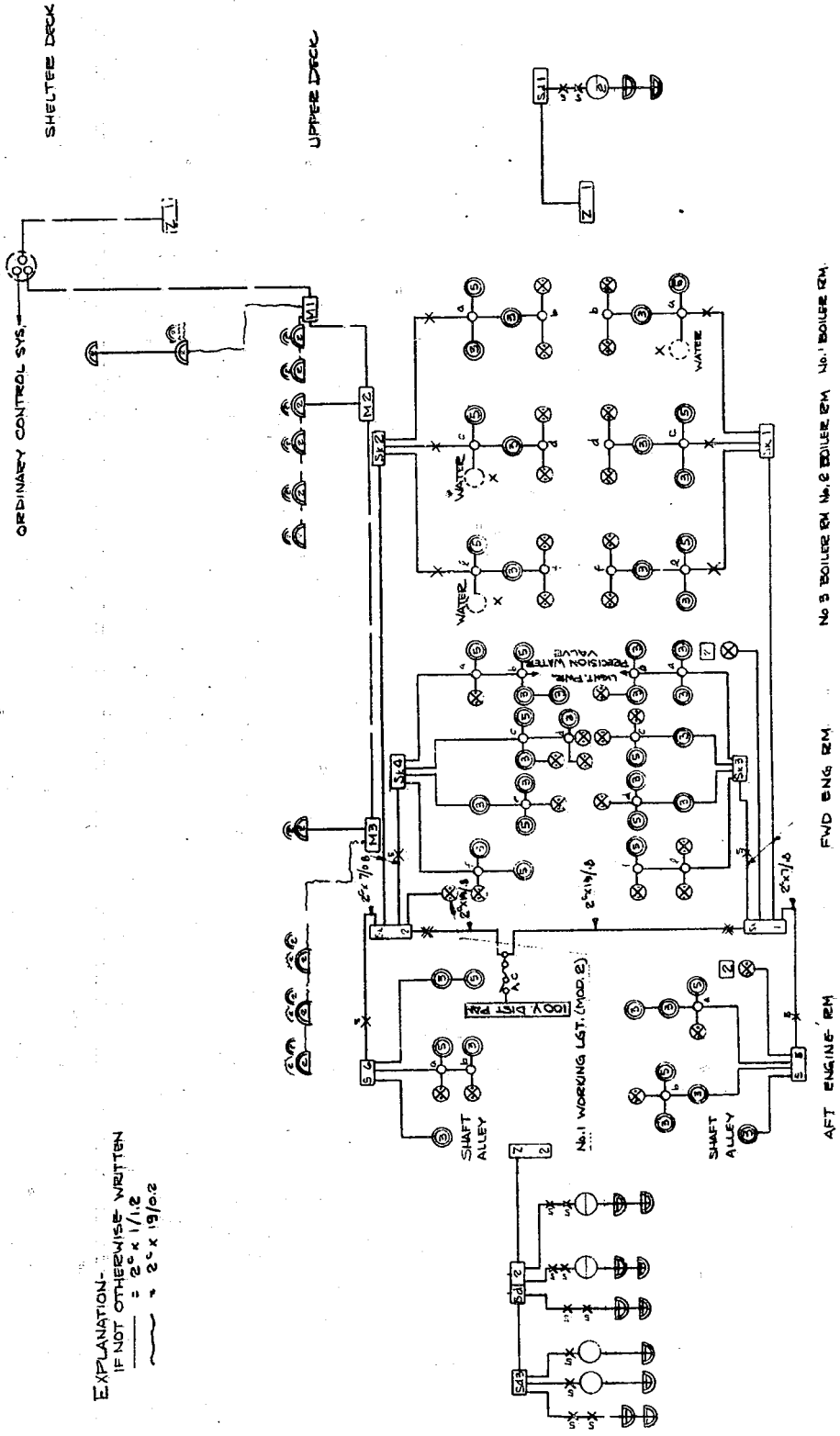

Figure 57
DD HATSUKAZE WORKING LIGHTING BOILERROOM AND ENGINEROOM WIRING DIAGRAM

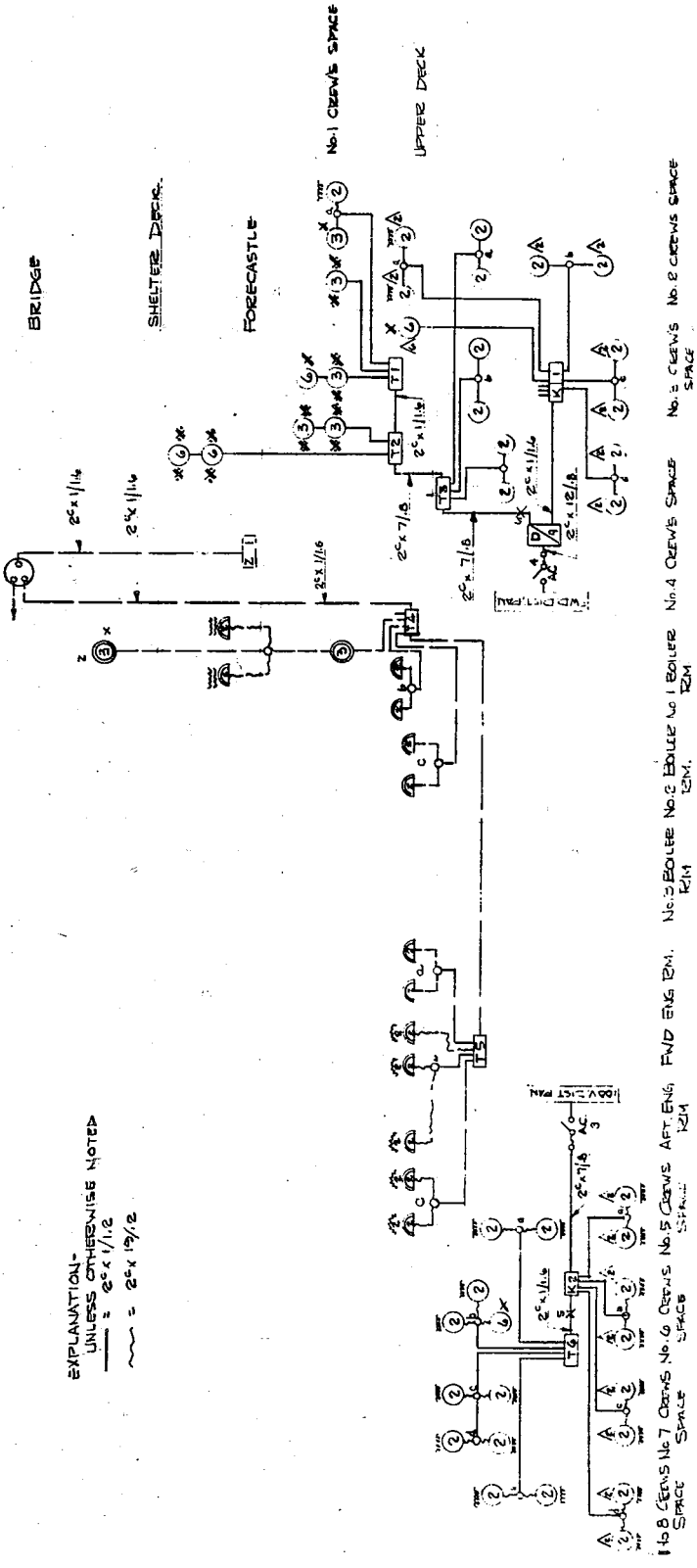

Figure 58
DD HATSUKAZE ALARM LIGHTING WIRING DIAGRAM

space. The intention is to provide normal lighting in these compartments sufficient only for security purposes when the ship is alongside a dock. Underway the lighting required for operation of the equipment in the space is provided on the work lighting circuit. The inclusion of this circuit in the design of the vessel permits a small operating economy in that all supplementary lighting for operation below the main deck can be disconnected and secured when alongside a dock.

Alarm lighting is a circuit which includes all lighting along weather deck passages, in exposed locations, and all interior lighting which cannot be blacked-out adequately by deadlights or other means. This circuit is secured under darkened ship conditions. Larger vessels are in some cases provided with two alarm lighting circuits. One of these circuits supplies the lights more obviously visible from outside the ship. Thus, this could be considered a "brown out" circuit. This circuit was secured on all battle cruising. The other alarm circuit was secured when in the presence of an enemy. It was apparent that these two circuits perform a single function and could quite reasonably be combined. The opinion in the Japanese Navy was not consistently in favor of two alarm circuits.

The emergency lighting circuit is similar in purpose to the same circuit in U. S. naval vessels but far less extensive. For instance, a Japanese 1650 ton destroyer of recent design has only 17 emergency lighting fixtures distributed throughout the ship. An 8000 ton cruiser built in 1943 has only 63 emergency lights distributed through the ship. The emergency lighting circuit in a Japanese vessel is designed to supply only the bare minimum of illumination to get about the ship; it is not designed to supply sufficient lighting for operation of equipment. The emergency lighting circuit is supplied from the normal lighting distribution panel through a transfer switch. Upon loss of normal ships service power, the emergency lighting is manually transferred to a storage battery source. This is typical of Japanese Navy design for little dependence is placed upon a plurality of generating sources and all emergency or back-up is from storage battery sources.

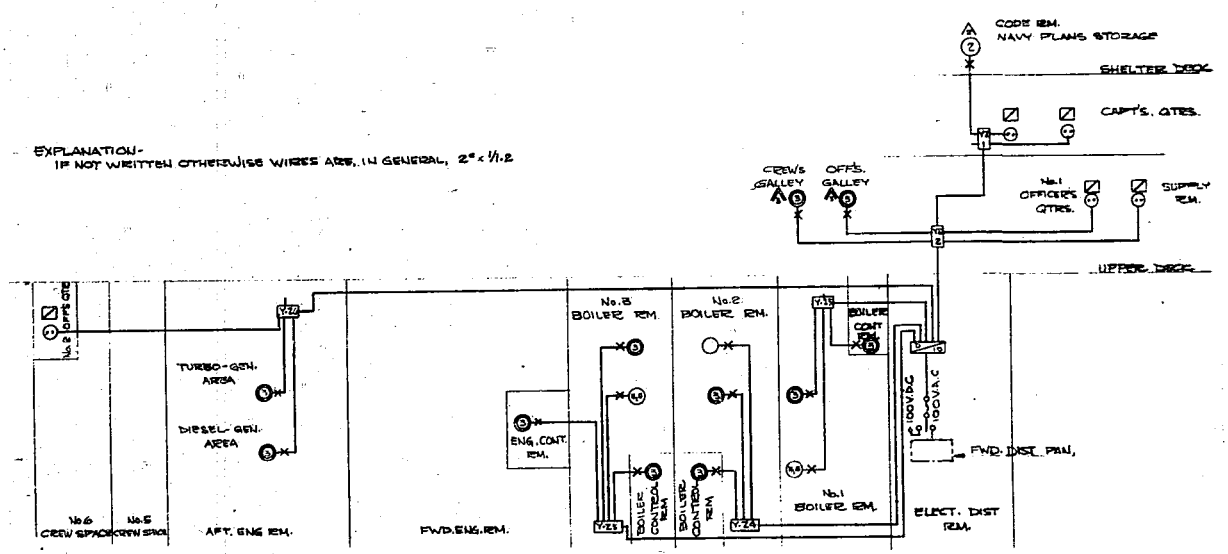

Figure 59
DD HATSUKAZE EMERGENCY LIGHTING WIRING DIAGRAM

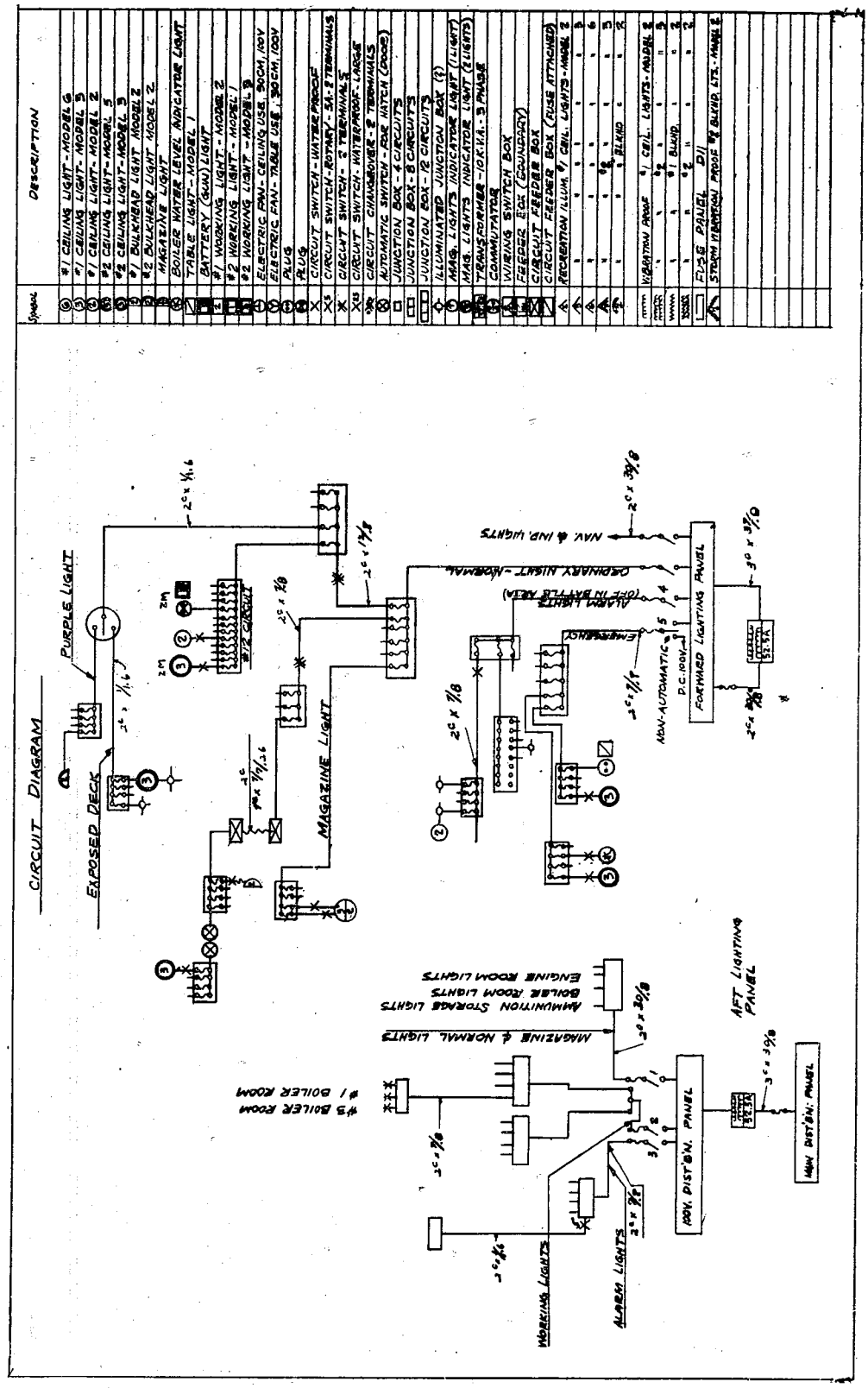

Figure 60

DD HATSUKAZE LIGHTING DISTRIBUTION SYSTEM, WIRING DIAGRAM

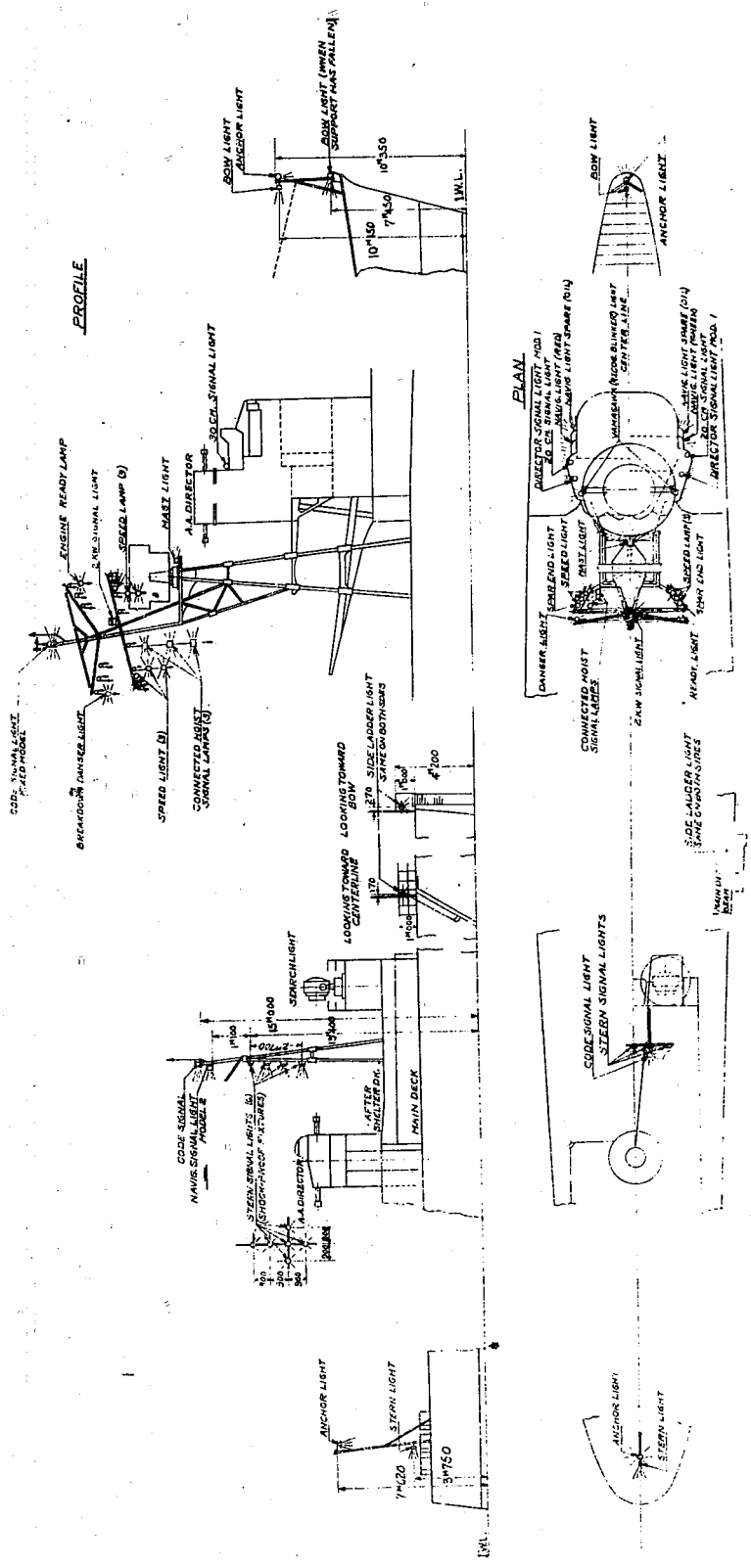

Figure 61
DD SHIMOTSUKI
ARRANGEMENT OF NAVIGATION AND SIGNAL LIGHTS

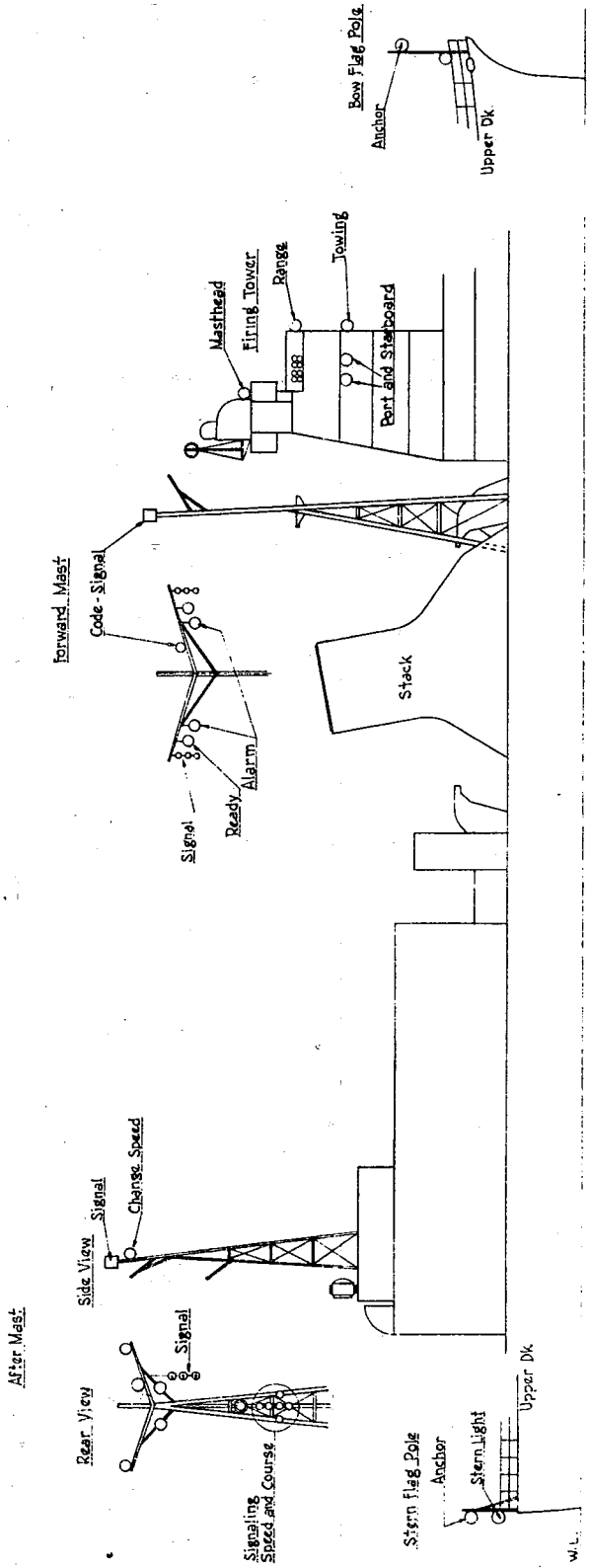

Figure 62
DD OMANI
ARRANGEMENT OF NAVIGATION AND SIGNAL LIGHTS

The essential lighting plans for a 1650 ton destroyer are shown in Figures 56, 57, 58, and 59. The lighting distribution system is shown in Figure 60.

The manual transfer for emergency lighting is shown in Figure 59 at T.

Before the war and in the early years of the war Japanese combatant vessels were equipped with an argon lighting circuit. This circuit provided lighting under darkened ship conditions along weather deck passages, in the pilot house, in turrets, in directors, and in other exposed locations requiring light for operation. The circuit was abandoned shortly after the outbreak of the war because these lights were visible under darkened ship conditions. Precise information on the intensity of the argon lights was not available and samples could not be obtained. It was explained, however, that these lights could be seen for a distance of one mile on a clear, dark night with eight power glasses.

3. Signal and Navigation Lights

A profile and plan view of a Japanese destroyer and a Japanese light cruiser are reproduced, Figures 61 and 62, showing all signal and navigation lights used on Japanese Navy vessels.

Japanese naval vessels are equipped with navigation lights required by the International Rules of the Road. It will be noted that the range light is omitted. The International Rules specify this light as an optional light.

The usual blinkers and mast-top 360° lights are provided for transmitting code.

Four arrays of colored lights are used for recognition and signalling. Three of these are hoisted three-light arrays. Two are displayed at the extremities of the yardarm of the foremast and one on the portyard of the mainmast. The array contains red, green and white lights. The relative position of each light can be changed at will in the same manner as the arrangements of flags in a flag hoist can be changed. The fourth array is permanently mounted approximately half way up the mainmast. It is diamond-shaped with one additional light offset at the top. All of these are steady lights; they are either on or off; a pulsing feature is not provided.

NavTechJap Document No. ND50-1920, "Standard Specifications of Electrical Light Signalling Equipment" lists and describes the function of all signal and navigation lights on a Japanese naval vessel.

4. Battle Lanterns

Japanese naval vessels are equipped with hand lanterns, a sample of which has been shipped to the United States; (NavTechJap Equipment Number JE 22-2053). The lanterns are a six volt, lead storage battery type. The design is awkward and the lantern is excessively heavy. These lanterns were distributed about the ship during battle cruising and were returned to a central location in accordance with an established schedule for recharging. The allowance for an UNRYU class CV was sixty lanterns; smaller ships had a proportionately smaller number of lanterns.

5. Searchlights

The Japanese Navy was dependent on searchlights to find an enemy during night engagements. Hence, their vessels were equipped with a very large number of searchlights. The following tabulation lists searchlights for illumination and signalling on typical naval vessels of all classes:

SEARCHLIGHTS FOR ILLUMINATION AND SIGNALLING

Ship	For Illumination		For Signalling	
	No.	Size	No.	Size
BB YAMATO	8	150 cm	4 4 4	60 cm 20 cm 2 kw
CV TAIHO	4	110 cm	2 2 2	60 cm 20 cm 2 kw
CV JUNYO	4	110 cm	2 2 2	60 cm 20 cm 2 kw
CV UNRYO	4	110 cm	2 2 2	60 cm 20 cm 2 kw
CA TONE	3	110 cm	2 2 2	60 cm 20 cm 2 kw
CA IBUKI	3	110 cm	2 2 2	60 cm 20 cm 2 kw
CL AGANO	3	110 cm	2 2 2	40 cm 20 cm 2 kw
CL OYODO	3	110 cm	2 2 2	60 cm 20 cm 2 kw
DD ASASHIO	1	90 cm	2 1	20 cm 2 kw
DD TERUTSUKI	1	90 cm	2 1	20 cm 2 kw
DE MATSU	1	90 cm	2 1	20 cm 2 kw

6. Darkened Ship Conditions

A Japanese Navy vessel was prepared for darkened ship conditions by securing the warning lighting circuits, closing deadlights in illuminated compartments and shielding lights to avoid horizontal radiation with cloth stockings or metal shields in compartments opening on weather decks. Door switches and light locks were observed on some vessels. Neither method, however, was used throughout a vessel in a manner which was thorough and which would guarantee light security. Colored lights were not used on Japanese vessels to reduce radiation under darkened ship conditions. Instruments in exposed locations were internally illuminated. Instrument lights were not equipped with rheostats to control intensity nor colored filters to reduce radiation. Fluorescent instrument dial markings were used to a very limited extent.

No attempt was made to install phosphorescent or fluorescent markers to assist in ship operation in darkened ship conditions. A survey of several Japanese vessels indicated that light security under darkened ship conditions was poor.

7. Distribution System for Lighting

The lighting distribution systems on Japanese combatant vessels are illustrated by Figures 60, 63, 64. Figure 63 shows the typical lighting distribution for a vessel equipped with a ring main. Figure 64 shows the typical lighting distribution for a vessel equipped with in-line switchboards. Figure 60 shows the details of the lighting distribution system.

The distribution system consists of feeders radiating essentially, from a fuse switch or switches for each circuit at the main switchboard or at the ring main. These feeders supply buses in lighting distribution panels from which the individual lighting circuit is supplied through fuses. The distribution panels do not contain switches. No effort was made to assemble lighting control switches in control panels as is the case in U. S. vessels. All lighting switches are separate and are individually mounted.

B. LIGHTING EQUIPMENT

1. Lighting Fixtures

The lighting fixtures in Japanese naval vessels are of four types:

a. A watertight fixture almost identical with the U. S. Navy standard steam-tight fixture. It consists of a molded, clear glass globe essentially cylindrical but with a spherical end fitting rather closely about the lamp bulb. The globe is fitted into a cast iron base. These fixtures are the ones most generally used on all classes of naval vessels. They are installed both above and below the main deck. Clear globes are always used.

b. A magazine fixture which is identical with the watertight fixture except the base contains a small switch which disconnects the power supply to the lamp when the globe is removed. This fixture is used in powder magazines for semi-fixed ammunition. It is not used in magazines containing fixed ammunition.

c. A fluorescent lighting fixture which is used in the captain's cabin, the wardroom, the plotting rooms and occasionally in additional control stations in large surface vessels. Fluorescent lighting is used in all living spaces and in the control rooms of all submarines. The fixture is standard with two tubes each 24 inches in length secured in the metal reflector by a steel strap at either end. These fixtures are used on both D.C. and A.C. circuits. The lamp circuit, of course, is not the same for A.C. and D.C. operation. The two tubes are placed in series on 220 volt D.C. ships. Figures 65 and 66 are photographs of this fixture.

d. An elementary commercial fixture consisting of a socket and an enameled plate reflector is used in living compartments on some vessels.

Samples of lighting fixtures have been shipped to the United States. (NavTechJap Equipment Number JE 22-2057A, Fluorescent Fixture, and JE 22-2057C, Magazine Fixture).

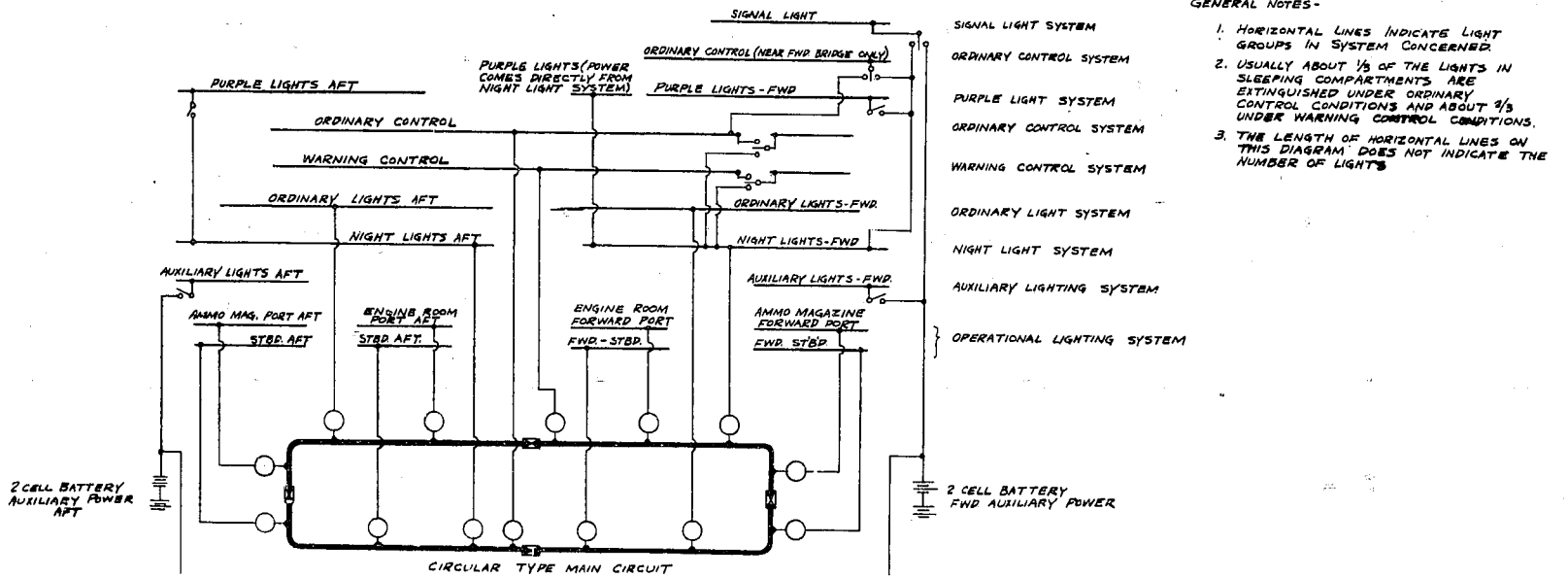

GENERAL NOTES-

1. HORIZONTAL LINES INDICATE LIGHT GROUPS IN SYSTEM CONCERNED.
2. USUALLY ABOUT 1/3 OF THE LIGHTS IN SLEEPING COMPARTMENTS ARE EXTINGUISHED UNDER ORDINARY CONTROL CONDITIONS AND ABOUT 2/3 UNDER WARNING CONTROL CONDITIONS.
3. THE LENGTH OF HORIZONTAL LINES ON THIS DIAGRAM DOES NOT INDICATE THE NUMBER OF LIGHTS

Figure 63

TYPICAL LIGHTING DISTRIBUTION

FOR VESSEL WITH RING MAIN

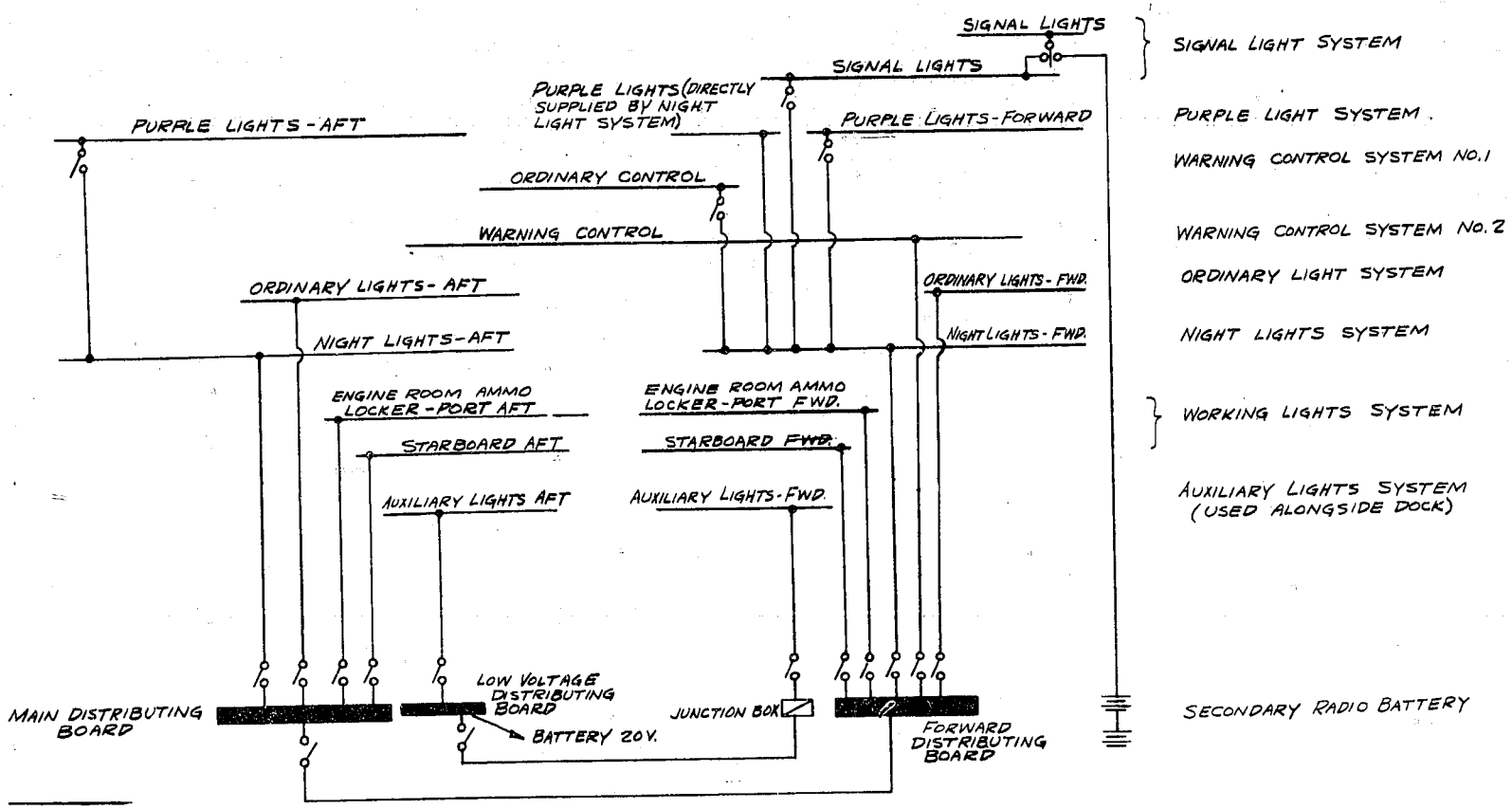

Figure 64

TYPICAL LIGHTING DISTRIBUTION FOR
VESSEL EQUIPPED WITH IN-LINE SWITCHBOARD

2. Shock-Proofing Lighting Fixtures

The watertight magazine, and fluorescent fixtures are shock-proofed by mounting on rubber or springs in a manner similar to that followed in the U. S. Navy six or seven years ago. In general, a three part spring suspension is used with the springs replaced by rubber in some instances.

A shock mounted fixture has been shipped to the U. S. (NavTechJap Equipment Number JE 22-2057B).

Ordinary commercial light bulbs are used on board ship. Rough service bulbs were not available.

3. Searchlights

Japanese searchlights are almost identical in design with U. S. equipment designed five or more years ago.

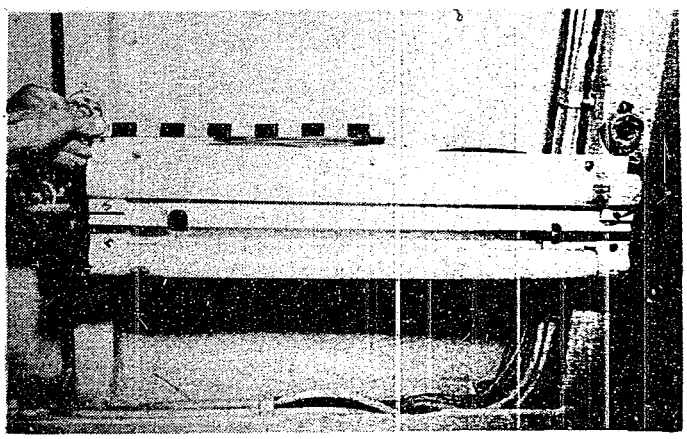

Figure 65
ASSEMBLY - FLUORESCENT LIGHTING FIXTURE

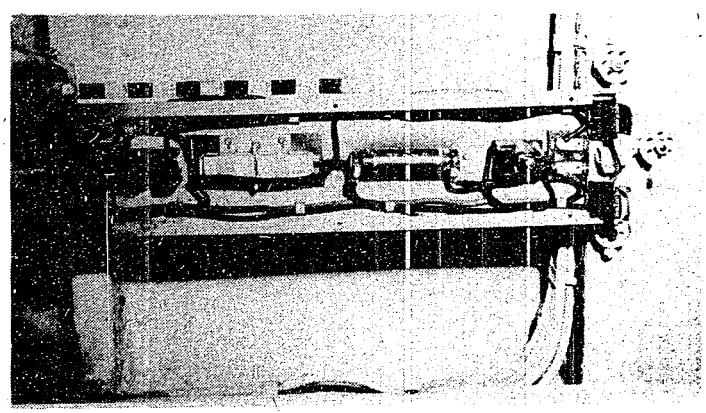

Figure 66
STARTING EQUIPMENT - FLUORESCENT LIGHTING FIXTURE

Part III
INTERIOR COMMUNICATION

A. INSTALLATION ON BOARD SHIP

1. General Comments

The interior communication systems have the same purpose as those in U. S. vessels: to provide communications to maneuver and fight the ship. Circuits and equipment tend to have the same general function as those installed in U. S. vessels. A few circuits are more extensive and more complex and some considered obsolete are still in use in the Japanese Navy. In general, the installation of I.C. equipment in Japanese vessels is confused and much more poorly planned and executed than in similar U. S. vessels. There is inadequate telephone and announcing equipment yet less useful I.C. equipment is provided in liberal quantities.

Telegraph systems are more extensive than those in U. S. vessels. One half to one third fewer telephones and telephone circuits are installed. These circuits do not provide the flexibility and coverage considered necessary in U. S. vessels. The telephone circuits are largely exchange circuits which proved slow and cumbersome in operation. The Japanese did make provision for a sound power telephone damage control circuit which consisted of permanently installed cables which could be connected together to provide communication. An emergency telephone circuit which consisted of coils of cable with S.P. telephones attached to be strung through the ship as required was also provided. Both of these circuits are considered excellent.

Japanese vessels are designed with from one-fourth to one-sixth the quantity of announcing and intercom equipment provided in U. S. vessels. This definitely does not give complete coverage throughout the ship. Couriers are required who run throughout the vessel repeating orders announced over the general announcing system. No loud speaking equipment is installed in DD's, SS's or DE's. Voice tubes are extensively used and are installed throughout the vessel extending to the machinery spaces and all turrets.

The Japanese are aware of the defects in the voice communications systems on combatant ships. Plans had been proposed to augment the announcing and intercom circuits, to install additional sound power telephone circuits, to reduce the exchange circuits, and to replace voice tubes with sound power telephones.

The general arrangement of interior communication equipment in stations appears unplanned and not coordinated. Instruments and equipment are not properly grouped according to function and in a manner to require a minimum operating personnel. The instruments are arranged in a station so that much lost motion and confusion results. The unhandiness of equipment was overcome in some cases by placing additional personnel in the operating stations. Generally, the arrangements of spaces do not conform to the requirements and practices employed in the U. S. Navy.

Japanese I.C. equipment appeared to be largely copied from designs originating in other countries. The gyro compass equipment was manufactured in Japan under license from Sperry and Anschutz. The log equipment was manufactured in Japan under license from Chernikeif (Russian) and the S.A.L. (Swedish). Selsyns were direct copies of German designs. All battery powered telephone equipment follows the cumbersome German types.

The announcing equipment is old U. S. design.

2. List of Interior Communication Circuits in Surface Vessels

The following circuits and systems comprise the main interior communication installation in surface vessels of the Japanese Navy:

a. Call bell system.

b. Telephone system:

(1) Battery powered circuits.

(2) Sound powered circuits.

c. Intercom system.

d. General announcing system:

(1) Flight deck and hangar deck circuit.

(2) General defense damage control and engineers' circuit.

(3) Portable announcing system.

e. Rudder angle system.

f. Steering telegraph system.

g. Emergency steering telegraph system.

h. Engine order telegraph system.

(1) Propeller revolution telegraph system.

i. Propeller shaft RPM indicator system.

j. Cruising turbine control telegraph system.

k. Oil pressure telegraph and oil burner telegraph system.

l. Hot smoke cooling system.

m. Horsepower signal system.

n. Flooding command telegraph system.

o. Smoke indicator system.

p. Smoke screen indicator system.

q. Salinity indicator system.

r. Gyro compass system.

s. Sound motion picture system.

t. Underwater log system.

u. Wind direction and intensity indicator system.

v. Magazine temperature regulator system.

w. Temperature alarm system.

x. General alarm and gas attack alarm system.

y. Whistle operating system.

z. Voice tubes.

aa. Pneumatic tube system.

bb. Rate of accelleration indicator.

3. Description of Systems and Installations in Surface Vessels

a. Call Bell System

This system is used in conjunction with telephones and voice tubes and is installed in several separate groups, i.e., navigation, plane control, communication, defensive orders, and engine control. Each group is made up of two or more subgroups with separate electrical supply to each subgroup.

b. Telephone System

This system is broken down into two classifications - battery powered and sound powered. The battery powered telephone system constitute the major part of the telephone communication system installed and is further broken down into the following types of circuits:

Direct exchange circuits

Special exchange circuits

Manual exchange circuits (general purpose)

Damage exchange circuits

The direct exchange circuits and special exchange circuits are designed to provide direct two-way calling and talking between stations in the ship associated with the respective exchange. The direct exchange circuit consists of a special exchange box provided with two or four double-throw switches and two or four indicating lamps and a buzzer. A master telephone consisting of a headset is provided at the exchange box. When the double pole switch is thrown in one position, it rings the selected station and, when thrown in the other position, connects the telephone for talking. The indicating lamps show which station is calling and the associated double pole switch is then thrown to the talk position, thus completing the talking circuit. This system operates on a 20 volt D.C. storage battery supply.

The special exchange system consists of handsets mounted on specially designed shockproof boxes, and associated relay boxes located throughout the vessel. When the telephone is lifted from the telephone hook the circuit to the other station is automatically completed thereby ringing the other station. When the telephone at the called station is lifted from its hook, the ringing circuit is broken and the talking circuit is completed. These circuits operate on 20 volt D.C. storage batteries located throughout the vessel and provide for two-way calling and talking.

The manual exchange and the damage exchange circuits are identical in operation. Two plug-in switchboards are installed in the communications room (in some vessels, the damage control switchboard is

located in damage control) one called "general purpose switchboard" and the other "damage control switchboard". Handsets, headsets and table model telephones are used with these systems and all calls go through the respective control operator who plugs the call into the proper jack. In addition, the switchboard operator is provided with a series of multiple plugs fitted with two to eight plugs, connected in parallel, for the purpose of cross connecting circuits.

The direct and special exchange systems provide for direct communications between stations and are broken down into the following circuit functions:

Anti-aircraft fire control (machine gun)

Double purpose gun control

Main battery gun control

25mm AA control

Searchlight and lookout control

Direct communication instruction to aircraft (CV only)

Navigation department communications

Main engine control

Defense orders control

The general purpose switchboard system provides telephone communication between all stations in the vessel and provides the same service as the automatic exchange system installed in U. S. vessels but is less extensive; and in addition, is used for battle purposes. Approximately six hundred telephones (all types) are installed in a large aircraft carrier.

The damage exchange switchboard and system provides communication between the engineering spaces, pump and valve control rooms and damage control stations.

Sound powered telephones have not been extensively used in the Japanese Navy. Their first designs were handsets which were manufactured in 1943, and, judging from listening tests, they are inferior to the types used by the U. S. Navy. The transmitter and receiver units are of the cantilever armature type and appear to closely resemble the R.C.A. and Control Instrument Co. early types. On most vessels the installation of sound powered telephones generally consists of portable handsets and a series of pairs of jack boxes connected between decks and between bulkheads on the same deck. Connecting cords, with a plug at each end, are provided to connect between the jack boxes to set up and complete the circuits. The handset may be plugged into the circuit at any jack box. In addition, several reels of cable, fitted with connectors arranged so that they can be conveniently carried, are used to establish emergency communications. The most recent vessels were fitted with sound powered telephone handset circuits with a magneto ringing call system. Some headset type sound powered telephones were used in lieu of the battery powered headsets. The handsets are designed for direct communication between two stations. No selector switches are used. The magneto ringer, which appears to be of fair design, energizes an additional sound powered telephone unit and an indicator lamp mounted

inside the box on which the telephone is stowed. The magneto generated an 800 cycle note. The headsets consist of two receiver units connected in parallel and a transmitter mounted on a chest plate. The headset circuit is so arranged that the transmitter is connected to the opposite headset receiver units at all times. A three wire circuit using a connection common to one side of the transmitter circuit and one side of the receiver circuit, is provided between stations.

The exchange telephone systems and the direct telephone systems appear to provide satisfactory communications between stations in the vessels. However, the use of the old-fashioned manually operated "plug in" type switchboard for battle and damage control purposes is considered obsolete because of the inherent slowness of operations. The lack of an adequate sound powered telephone coverage in the vessels of the Japanese Navy is believed to show a lack of development and advancement in the telephone art as well as a lack of knowledge and foresight on the part of the senior officers and engineering officers of the Japanese Navy. A statement was obtained from the Japanese that they had recognized the superiority and usefulness of sound powered telephones and had set up a program to replace voice tubes and battery powered telephones in naval vessels at the close of the war, but were delayed due to limited manufacturing facilities as only one manufacturer with limited facilities could manufacture this equipment. In comparison, the telephone systems in the U. S. Navy are considered much superior in equipment, coverage and circuit layout with the single exception of the emergency telephone circuits. The emergency circuits as used by the Japanese are almost parallel to those proposed for installation in U. S. vessels at the close of the war.

c. Intercommunicating System

An intercommunicating system consists of either one or two master stations units, ten to sixteen speaker-microphone stations, and one amplifier. The system is designed to provide two-way communication between a master station and any one or all of the speaker-microphone stations. A transfer switch is provided to select either one of the master stations (only one master station may be used at a time) and the transfer was made when control of the vessel is shifted from the control bridge to the open bridge. The master station consists of a unit containing one talk switch and one listening switch per speaker-microphone station installed, and one reproducer which also is used as a microphone. The speaker-microphone station consists of one reproducer which can also be used as a microphone and one talk-back switch. The system operates as follows: the talker at the master station selects the station or stations desired by the operation of the proper selectors switch which puts the speaker-microphone of the master station on the input side of the amplifier and the message goes through to the station selected. The person at the speaker-microphone station may talk back to the master station by utilizing the talk switch at his station only if the talk-back switch at the master station is also closed. The speaker-microphone station may not talk back to the master station except when the master station so desires, thereby giving the latter complete control over the priority and use of the system. The system is installed between stations similar to the following:

Bridge	Anti-aircraft control (open bridge)
Damage Control	Circuit centers (I.C., room (s)

Ready room (CV only)

Chart house

Secondary conning station

Main radio

Radio receiving room (s)

Pump control room

Main engine control

This type of system provides practical and rapid communications to a limited extent; less extensive than the systems (18MC to 26MC) in stalled in U. S. vessels. It does not provide for any one station calling any other station.

However, it does include a feature whereby the master station can close two, or more receive keys at the master station and, when one of the receiver-microphone stations closes its talk-back key, the other station or stations connected at the master station can listen to the message.

This system is considered inferior to the similar systems (18MC to 26MC) installed in U. S. vessels, both regarding equipment, design and circuit layout.

d. Announcing System

Announcing systems are installed in aircraft carriers, battleships and cruisers of the Japanese Navy. The system usually consists of transmitter control stations located in the control bridge, open bridge, quarter deck-forward, quarter deck-aft, damage control and main engine control. A two channel amplifier usually is installed in the communications (telephone) room together with the associated motor generator. In vessels designed with A.C. power a D.C.-A.C. motor generator is installed for emergency supply. Some amplifiers are capable of driving two hundred reproducers. However, in a large carrier approximately eighty reproducers are installed throughout the vessel. This quantity includes coverage of the hangar and flight decks. There are five types of loud-speakers employed; a small pot type copied from a commercial design of the Racon Co., a large and medium size magnetic type of doubtful design for installation in exposed locations, a permanent magnet cone type speaker of obsolete design mounted in a wooden case, for installation in living spaces, a large bull horn copied from an old model Western Electric Co., and a small bull horn which is a reduced scale model of the large bull horn. The bull horns are used for flight deck coverage in aircraft carriers.

The method of operation is similar to that of the U. S. Navy. The loud-speakers are broken down into five groups, General Defense 1, General Defense 2, Damage Control, Engineering Group 1 and Engineering Group 2. The transmitter control station usually has two group keys, one for the general defense groups and the other for the engineering group. The damage control station talks only to the damage control group or the defense group or both groups. In addition, busy lamp signals are installed on the transmitter control stations to indicate when the respective amplifier channel is in use by another station. A priority control is established whereby the bridge transmitter can take control of the system at any time. It is interesting to note that a moniter speaker is installed at the

bridge transmitter for listening to the engineer's group or damage control group to learn the importance of the message being transmitted by the other talker prior to exercising the priority control. Some systems incorporate a push button which when operated, energizes an oscillator circuit and produces an attention signal over the loud speaker system to indicate that a message will follow. In some vessels this signal was used for different alarm purposes by "keying" the push button. General alarm and gas attack alarm signals were not incorporated in the announcing systems.

In carriers, a flight deck announcing system was installed which consisted of one bull horn located inboard on the island structure and twenty loud-speakers in the hangar spaces, In this type of vessel the loud-speakers in the hangar spaces could be controlled either as part of the defense announcing groups or the flight deck system.

A portable announcing system is provided in aircraft carriers, battleships and cruisers for the purpose of addressing large groups and for damage control emergency. It consists of a portable 10 watt amplifier, one stand type microphone, one lapel type microphone and two portable loud-speakers.

The equipment, design and circuit layout is considered inferior to the corresponding U. S. Navy types. Japanese Navy engineers realized that the loud-speaker coverage was inadequate and that it did not provide for complete and satisfactory dissemination of vital information during battle. Plans had been made to augment the system in use with additional loud-speakers and to provide announcing systems in destroyers, submarines and auxiliary vessels. The lack of proper coverage of the vessel by the loud-speaker system was so evident to the Japanese that several couriers were sent around the vessel to supplement the announcing system by shouting the message.

The loud speakers are not fitted with blast valves and therefore will not withstand gun blast. All reproducers installed in exposed locations were removed and stowed below before firing of AA or MB guns.

e. Rudder Angle Indicator System

This system, is installed in all types of surface vessels and consists of a transmitter for each rudder located in the rudder room and indicators installed in the steering engine room, reserve engine control, counter flooding station, open bridge, control bridge, and command bridge. This system is energized from a small panel in the steering engine room through a double throw switch which selects either of two power sources, one source from the nearest power board and the other source from the power board farthest away. Fifty volt, fifty cycle selsyn motors are used in this system. This system is considered of good design and is comparable to similar systems installed in U. S. vessels.

f. Steering Telegraph System

This system is installed in all types of surface vessels and consists of two separate circuits. One system includes a transmitter on the open bridge, control bridge and secondary conning station and indicators located at the steering station in the steering engine room and in the emergency steering engine room. A double pole transfer switch is provided in the steering engine room for the purpose of selecting the transmitter in control. This circuit, which also is selsyn operated, is energized from a small panel in the steering engine room and operates on 50 volts, 50 cycles. This system as a

whole is considered of good design and is comparable to similar systems installed in U. S. vessels.

g. Emergency Steering Telegraph System

This system, which is selsyn operated, performs the same function as the steering telegraph system except that a transmitter is installed only on the steering bridge with an indicator installed at the steering station in the steering gear room. Two separate cables, one run in the port wireway and the other in the starboard wireway, are installed between the two stations. A double pole transfer switch is provided on the steering bridge to select either of the two cables. In addition, an alarm system is installed, consisting of a contact maker at the steering engines and a bell at the steering stations to indicate failure of the steering engines.

This system would be considered excessive in the U. S. Navy. However, in view of the fact that only one steering gear control (steering stand) is provided in Japanese vessels, this type of system may be considered essential as a standby. By installing port and starboard cables for the steering telegraph system, this system could have been eliminated.

h. Engine Order Telegraph System

The main engine order telegraph is of the mechanical rotating shaft type (one for port engines and one for starboard engines) and is operated by the rotation of a wheel fitted with a crank handle. The transmitter is located on the steering bridge and actuates mechanical indicators on the open bridge, command bridge, main engine control and in each engine room. The orders are transmitted only from the control bridge and there is no mechanical repeat-back indication. In conjunction with this system there is a 20 volt D.C. manually operated bell system installed which provides means for acknowledging receipt of the order. Push buttons are provided at the transmitter station and at the indicators in each engine room. Two-way calling is provided. This system also is used for emergency purposes by keying the pushbutton to indicate "one bell", "two bells", etc.

In addition, some vessels are fitted with an electrical selsyn type system, which is the standby system, and duplicated the installation covered by the mechanical telegraph system except that transmitters are installed on the steering bridge, command bridge and open bridge. This system provides for the transmission and repeat back of orders and is similar to the 1MB and 2MB system installed in U. S. vessels. Two sets of cable are installed for each circuit, one in the port wireway and one in the starboard wireway. There is a third system provided with transmitters located at main engine control and secondary engine control with indicators located in each boiler room. A transfer switch is installed in each boiler room in order that the indicator may be connected to either transmitter. In vessels fitted with separate enclosed boiler control stations, the indicators are mounted in the forward bulkhead of the enclosure and are fabricated with a front and back dial. The front dial is visible to the personnel in the boiler room and the back dial to the personnel in the control room. A separate bell is installed on each side of the bulkhead for signal purposes. The system is selsyn operated.

The quantity of equipment for the engine order telegraph appears to be excessive and the specification for using the electrical engine telegraph as the standby system is questioned. The mechanical system is extremely rugged and employs shafting $1\frac{1}{2}$ inches in diameter through its entire length. The employment of dual cables for the

electrical engine order telegraph systems is considered sound practice. The system between the main and secondary engine control stations and boiler rooms is not considered warranted and could be incorporated in the electrical system. However, it appears to be necessary when using the mechanical telegraph indicators which are located in the engine rooms only. An utter disregard for weight saving is indicated by this installation. The system as a whole, being more than adequate is not considered equal to installations in U. S. vessels regarding reliability, speed of operation, flexibility of circuits and coverage.

i. Propeller Revolution Indicator System

This system, which is selsyn operated, consists of a transmitter installed in the steering bridge and indicators installed in each engine room, main engine control and in each fire room. The instruments are fitted with dials and a single pointer. The dial is marked in "2" increments from 0 to 20 on each half of the dial and each half is marked "add on" and "take off" respectively. A two-way bell system is provided for signaling acknowledgement of orders.

j. Propeller Shaft Revolution Indicator System

This system, which is a voltmeter type, consists of a permanent magnet type generator, (belt driven) located in each engine room and a voltmeter type indicator installed in engine rooms, boiler rooms, steering bridge and secondary conning station. One indicator is installed for each shaft. Boiler rooms in some cases are fitted with one indicator and a selector switch for selecting either shaft indication depending on the steaming arrangement established.

The equipment and circuit layout is not considered as accurate or reliable as those installed in U. S. surface vessels.

k. Cruising Turbine Control Telegraph System

The steam piping system on some Japanese combatant vessels is arranged so that the port, forward cruising turbine, discharged steam to the high pressure port, aft turbine. The steam piping is similarly connected for the cruising turbine, port, aft, and the high pressure turbine port, forward. The steam piping interconnections on the starboard side duplicate the port piping interconnections.

A telegraph system is employed to control the operation of cruising turbines on each side of the ship. The system on the port side is between main engine control and the two cruising turbines on the port side, forward, and aft. The system on the starboard side is between the secondary main engine control and the cruising turbines on the starboard side. The orders are standby, ready, in, out, and stop. This system is not necessary and the function could be accomplished by telephones. Japanese naval officers agree.

l. Oil Pressure Telegraph System and Boiler Burner Telegraph System

These systems, which are selsyn operated, consist of transmitters located in respective boiler control stations (4) for the purpose of transmitting orders relative to oil pressure desired and the number of burners to be cut-in and cut-out per boiler. The circuits are similar to those installed in older vessels of the U. S. Navy.

m. Hot Smoke Cooling System

This system is installed only in carriers fitted with side smokestacks.

The system consists of a contact maker located in Fly 1 which operates buzzers located at the boiler control station and the hot smoke cooler pump room to indicate that the smokestack water cooling system should be started. A pump-driven water cooling system is fitted into the stacks. When plane operations were being conducted, the hot smoke had considerable effect upon flight deck operating personnel. By the operation of the cooling system the heat of the stack gases and smoke was reduced.

n. Horsepower Signal System

This system consists of a permanently installed torsion meter for each shaft to indicate ship's horsepower at each throttle station and at main engine control. The indication is given by a lamp type indicator. The system operates on 20 volts D.C.

o. Flooding Command Telegraph System

This system which is selsyn operated, consists of one or more separate circuits, each with a transmitter-receiver located at the counter flooding control station and an indicator-transmitter located at the valve control and pump rooms. The dial markings order the shifting of oil and water from one tank to another for stability control. This system is considered to be of good design and coverage. However, it could be eliminated and the function performed by proper telephone communication circuits.

p. Smoke Indicator System

This system is selsyn operated and consists of a transmitter located at the smoke observation post and an indicator in each fire room. The orders and system are similar to circuit SA (smoke order telegraph) formerly installed in vessels of the U. S. Navy. The system is considered obsolete and the function could be better accomplished by proper telephone communications.

q. Smoke Screen Indicator System

This system, which is selsyn operated, consists of transmitters installed in the steering bridge and control bridge with a selective switch. Indicators are installed in main engine control and in each boiler control station. In addition, signal bells are installed in each boiler control station and each fire room.

r. Salinity Indicator System

This system is for determining the salt content of boiler feed water. It consisted of a cell of special design, and an electrical bridge circuit designed for operation on 50 volts, 50 cycle A.C., and a voltmeter indicator. The voltmeter scale is calibrated in milligrams of salt per liter. One complete system is installed for each engine room. This consists of one cell, installed in the piping from the last effect evaporator, connected directly to the indicator limit in the engine room. The system has temperature compensation and is reported to have high accuracy.

The system is well designed and provides high accuracy but is considered inferior to the present type used in the U. S. Navy. The coverage is considered unsatisfactory since it provides only one check in the system. The system is similar to the old Leeds and Northrup instruments abandoned by the U. S. Navy approximately fifteen years ago.

s. Gyro Compass System

The gyro compass system consists of master compasses, main switchboards and associated equipment located in the gyro room forward and the gyro room aft. (Only one gyro on DD's) and repeaters installed in A.A. director stations, each plotting room, each radar room, sonar room, chart room, each gyro compass room, steering bridge, hydrophone room, steering engine room, secondary steering engine room (if fitted), and ready room and flight control station in carriers. In addition three gyro repeaters with 12-inch binoculars mounted thereon are installed in the AA control station; two with 18cm glasses mounted thereon are installed in the steering bridge; and seven with a high powered spotting glass mounted thereon are installed in AA control (2), flight control station (2), steering bridge (2), and secondary conn (1).

This system is not considered as extensive as those installed in U. S. vessels but is considered to provide satisfactory coverage of the vessel. Only one instrument is installed in a station for a specific function with the transfer to the forward or after gyro compass accomplished through the main switchboard in the forward gyro compass room. A dead reckoning tracer is installed in the steering bridge. The D.R.T. unit and the gyro compasses receive inputs from the log systems.

t. Sound Motion Picture System

There were no permanently installed sound motion picture systems or equipment in Japanese naval vessels. However, a portable system of five units and a semi-portable of eight packages were available and were issued to a vessel for use while in port. In some instances this equipment was retained by a vessel for use when going on a long cruise.

u. Underwater Log System

This system, which is selsyn operated, consists of a metering unit projecting through the hull of the vessel, master speed and distance transmitters and speed and distance indicators. Two types of log systems are used in the Japanese Navy. One system employs an impeller drive and the other system is of the pitot tube bellows operated type. The actuating unit extends through the hull of the vessel and is located one third of the length of the vessel from the bow. The associated master instruments are installed in the same space as the sea valves. In addition, the power supply and associated switches, fuses and resistors also are located in this space. The system provides speed and distance inputs to the gyro compass system and to the fire control system. Speed indicators are installed in the open bridge, control bridge, steering bridge, (with one at the chart desk), secondary conning station, defense control station, hydrophone room, sound room, taffrail log room, counter-flooding control room, each double purpose battery control room, main engine control, secondary engine control and steering control station. Distance indicators are installed in the steering bridge (one at the chart table) and secondary conning station. A distance indicator of the yardage (meter) indicator type is installed at the chart table in the steering bridge.

Two types of systems were used by the Japanese Navy. The S.A.L. log type is a bellows operated design of Swedish origin but manufactured in Japan and is essentially similar to the systems installed in the USS LOUISVILLE, USS CHICAGO and the Submarines V-1, V-2, and V-3. The Chernikeif log of Russian origin had been modified and manufactured by the Japanese. It employs the impeller drive principle, with the

rotating element and electrical contact mechanism entirely exposed to the water. Due to corrosion these elements must be replaced approximately once a month under operating conditions. High accuracy was reported and from examination of the equipment and installation in the vessel this is considered a true statement. The log equipment employed by the Japanese Navy is considered at least equal to that installed in vessels of the U. S. Navy with the exception that an excessive quantity of instruments was installed.

v. Wind Direction and Intensity Indicator System

This system is selsyn operated and consists of separate wind direction and wind intensity transmitter and wind direction and intensity indicators. The wind direction and wind intensity indicator functions are not incorporated into one instrument. Wind intensity indicators are installed in flight deck control station, steering bridge, plot 1, plot 2, commanding officers stateroom, squadron commander's stateroom, wardroom, staff office, secondary conning station, aerology office, and gangway watch officer's station. Wind direction indicators are installed in A.A. control station, flight deck control station, steering bridge, plot 1, plot 2, secondary conning station and aerology office.

The equipment and circuits are of good design and are considered equal to similar equipment installed in U. S. vessels. The equipment includes some novel design features.

w. Magazine Temperature Regulator System

This system consists of resistance thermometers located in each bomb stowage and ammunition stowage space, including the machine gun ammunition stowage space. A master station consisting of a meter and a push button for each thermometer is provided at the captain's orderly station. A reading may be obtained at any time by operating the respective push buttons. The system operates on 20 volts D.C. If the readings are found to be near the critical point for powder stowage, the cooling system for the magazine spaces can then be started manually. No similar system is installed in the U. S. Navy as this function is automatically cared for by the functions of the fire alarm system, Circuit F. This system adds considerable weight to the vessel and is unnecessary. It is practically duplicated by the temperature alarm system described below.

x. Temperature Alarm System

This system consists of an alarm panel and bell installed in the captain's orderly room and resistance type thermometers located in each magazine for bomb stowage and ammunition stowage including machine gun ammunition. When the alarm is sounded, due to the temperature reaching a predetermined level, the operator at the captain's orderly station checks the reading on the temperature regulator system referred to above and then sounds the general alarm. The system is considered inferior to the fire alarm system, Circuit F, in design and circuit coverage.

y. General Alarm and Gas Attack Alarm System

This system, which operates on 20 volts D.C. or 50 volts, 50 cycles, consists of a manually operated contact maker located at the command bridge to control the operation of vibrating bells installed throughout the ship. There are no automatic timing devices and the contact maker is held closed for approximately fifteen seconds. The system also is operated by "keying" the contact maker to give a coded signal for other alarms. The system is fused and fed into five seperate circuits.

The signals produced by the system were not considered of sufficient intensity and a red lamp was added in noisy spaces. While the alarm system was not incorporated in the battle announcing system it had been discussed by the engineers and naval personnel and was contemplated for new construction. The system as a whole did not provide satisfactory coverage of the vessels; and the equipment and circuit layout is not considered equal to the installations in older vessels of the U. S. Navy. By incorporating the alarm system in the battle announcing system, a saving in weight of several tons would have been accomplished, signals of satisfactory intensity could have been obtained and satisfactory coverage of the vessel would have resulted.

z. Whistle Operating System

This system consists of a contact maker located on the control bridge which operates the solenoid valve of the main ship's whistle. This system is similar and equal to the whistle system installed in U. S. vessels.

aa. Voice Tubes

Voice tubes were used extensively in Japanese vessels of all types. They are installed between engine rooms, engine rooms and fire rooms, conning stations to engine rooms and main engine control, between navigation stations, from plotting rooms to turrets and mounts, and between plotting rooms and fire control stations.

The Japanese Navy had for some time considered voice tube communications unsatisfactory but could not depend on battery powered telephones because they were considered vulnerable due to loss of power and other electrical derangements. No special features such as gas tight diaphragms were used on voice tubes. Direct communication circuits using sound powered telephones and call bell systems were contemplated as substitutes for voice tubes in the latest vessels and a program was set up to replace voice tubes with sound powered telephones when they became available.

bb. Pneumatic Tube System

This system, which is for passing written messages between stations, is similar to the systems installed in U. S. vessels. It consists of two-way tubes between main communication and each radio room, main communication and telephone room and between bridge and each engine room. These systems are installed in all carriers, battleships, cruisers and in some destroyers. It was reported that an extensive system of this type was employed in all types of vessels. Casualties such as leaking air and message carriers becoming lodged in the tubes resulted in the systems being removed from all small vessels.

cc. Rate of Accelleration Indicator

All carriers, battleships, cruisers, and destroyers having turbine drive are fitted with a rate of accelleration unit located at each engine control station. This instrument consists of a mechanical clock mechanism which positions a cam cut to the ship's speed curve which in turn positions a pointer to indicate the proper rate of accelleration of the turbine. It was reported that units of this type had been instrumental in preventing damage to the turbine blades and shafting. While this type of instrument has never been authorized in U. S. vessels, many U. S. vessels have fabricated such an instrument for this purpose.

dd. Electrical Character Transmission System

No systems of this type were installed in Japanese naval vessels, and, according to information obtained, a system of this type had never been contemplated by the Japanese.

ee. Sound Recording System

No message recorders of any type were installed in Japanese naval vessels. Such systems had not been contemplated for shipboard use.

ff. Selsyn Motors

The selsyn motors used in the Japanese Navy are copies of German-made selsyns. They are designed with a "plug in" feature provided for rapidly replacing the motors. They are of the open type, not dust proof. The receiver motors were manufactured in three sizes and when tested with one transmitter driving one indicator the accuracy was reported to be: Size A, plus or minus one degree; size B, plus or minus two degrees; size C, plus or minus three degrees. The torque was reported as 600 gm-cm at 90 degree displacement. The torque gradient could not be ascertained. One size transmitter capable of driving 16 motors was standard for I.C. installations. Where greater accuracy was necessary, two or three indicator motors were geared to one pointer or a single work unit. The only point of interest in the selsyn motors is that on certain types of transmitter and indicator motors a secondary field winding was provided which, through transformer effect, furnished the necessary power for the dial illumination lamps. Selsyn circuits employed in the electrical telegraph systems have each motor primary separately fused and each leg of the secondary of each motor is connected through a resistor, reported to be rated at 16 ohms. The resistors are used to prevent feed back by off position receivers.

Selsyn motors used in the Japanese Navy are not considered equal to selsyn motors used in the U. S. Navy.

gg. 600 Conductor Cable

Many of the interior communication and telephone circuits are run through the vessels in cables containing 200, 300, 400, 500 or 600 conductors. This cable is similar to the lead sheath telephone cable used by the American Telegraph and Telephone Company in street conduits. The insulation is paper and over the lead sheath there is a twisted steel wire armor for protection. This type cable was used by the British for low voltage circuits and gave them a great deal of trouble after battle damage. The installation of many circuits in a single cable is considered a serious hazard.

hh. Interior Communication Room

Each vessel has two or more rooms which resemble to some degree the I.C. room in U. S. vessels. These are, however, more nearly simply circuit centers, since most of the interior communication and telephone circuits are energized from one of these spaces. There are no individual circuit switches, but instead, one supply switch controls several circuits. Each circuit is individually fused and resistors are installed for each leg of the secondary of each selsyn motor. A few of the I.C. circuits are energized or the switch is located elsewhere than in these I.C. rooms, but

in these instances the power supply originates in one of these rooms. In addition, where the switch for a circuit is located outside these rooms, a fuse was installed in that remote location and also in the I.C. room, thereby putting two fuses in series. This is considered extremely poor practice.

The announcing system amplifier and the telephone panels are not installed in the I.C. rooms, but are in two separate locations. This arrangement necessitates a large number of electrician's mates.

The arrangement of the circuit control and power supply for the interior communication systems and the I.C. rooms is not considered equal to the installations in U. S. vessels. The action cut-out facilities are not considered adequate. There was no plan or arrangement whereby damaged instruments could be cut out of a system except by removing the fuses and resistors for a particular instrument. No control panel was noted where transfer of control of the ship from one conning station to another could be accomplished as is done at the A.C.O. switchboards in the I.C. rooms on U. S. vessels. A typical interior communication room is shown in Figure 75.

ii. General Arrangement of Interior Communications

The arrangement of interior communication instruments equipment in some respects is similar to installations in U. S. vessels. However, in the engine rooms of the larger and later vessels the equipment instruments and valve controls are installed in a separate control room located in, but walled off from, the respective engine rooms. All functions normally controlled at main engine gauge boards are performed in this room. Some of the I.C. instruments are pedestal mounted and some are bulkhead mounted. They are indifferently located, and it is evident that no serious effort was made to coordinate or group the instruments with regard to function or for facility of operation. For example, the engine revolution telegraph is located on the forward bulkhead while two mechanical engine order telegraphs are located in the after starboard area and the two electrical engine order telegraphs are on the forward bulkhead. The steering order telegraph is installed on the forward bulkhead and the associated rudder angle indicator is located on the center line of the forward bulkhead above the windows. These arrangements are typical of each station and must have resulted in a confusion of operation at the particular station throughout the vessel. In general, the location and arrangement of interior communication instruments as installed in the Japanese vessels does not conform to requirements and practice established by the U. S. Navy.

4. List of Interior Communication Circuits in Submarines

The following circuits and systems comprise the interior communication system in Japanese submarines.

a. Voice tube and sound power telephone call bell system.

b. Telephone system.

c. Voice tube system.

d. Intercom system.

e. Rudder, bow and stern plane angle indicator system.

f. Steering telegraph system.

g. Engine order telegraph system.

h. Propeller shaft RPM indicator system.

i. Underwater log system.

j. General alarm system.

k. Diving alarm system.

l. Hull opening indicator system.

m. Valve position indicator system.

n. Clutch indicator system.

o. Water in oil indicator system.

5. Description of System and Installations in Submarines

a. Voice Tube and Sound Powered Telephone Call Bell System

The voice tube call bell system consists of push buttons and 20 volt D.C. bells to provide two-way calling between station outlets. The telephone call bell system consists of a hand-operated magneto ringer for calling personnel at the other station. This equipment is installed as part of the telephone system.

b. Telephone System

This system consists of sound powered telephone handsets and headsets with outlets at the following stations and calls between stations: conning tower, control room, engine room, motor room, officers' quarters, crew's quarters (steering station), radio room, torpedo room and hangar space (fitted in I-400 Class). The telephones are connected in parallel through a cut-out switch panel located in the control room. No telephone communications are provided to the bridge or to the deck guns.

This particular circuit is similar to installations in U. S. vessels. However, it is considered that sufficient coverage of the vessel to coordinate all functions was not provided. Much of the communication was handled by voice tube.

c. Voice Tubes

This system provided a maze of voice tubes throughout the vessel with outlets as follows.

VT1-Bridge to conning tower

VT2-Conning tower to torpedo room

VT3-Conning tower to control room

VT4-Conning tower to engine room and motor room

VT5-Conning tower to after steering station (crews quarters)

VT6-Control room to all stations (Nine outlets)

The voice tubes are 70mm in diameter and are fabricated of copper. A gate valve is installed in each tube at each bulkhead for use in preventing flooding of compartments in case of damage. The system was reported to have provided unsatisfactory communication between outlets with long runs and was to be replaced with sound powered telephones.

d. Intercom System

This system consists of one central amplifier with master station installed in the control room and one speaker-microphone installed in each station, except the pump room. The operation of the system is identical with that described for surface vessels.

e. Rudder Bow and Stern Plane Angle Indicator System

This system, which is selsyn operated, consists of a transmitter located at the rudder rams and indicators installed in bridge (pressure proof), conning tower, control room, main engine room, and main pump room. This system is similar to installations in U. S. submarines. The bow and stern plane system are identical for hydraulic operation; however, most submarines are fitted with direct mechanical control and only mechanical indicators are provided at the diving station. Hydraulic control is provided in all large submarines.

f. Steering Telegraph System

This system, which is selsyn operated, consists of a transmitter located in the conning tower and indicators installed at the steering engine handle crank. The transmitter and the rudder angle indicator in the conning tower are combined in a single instrument. This system is similar to installations made in U. S. submarines.

g. Engine Order Telegraph System

This system is of the mechanical rotating shaft type and consists of a transmitter located in the conning tower with a mechanical extension to the bridge. Orders may be transmitted from either station. Indicators are installed in the engine room and motor rooms. A clutch is provided in the mechanical extension to the bridge. No repeat-back is provided except by an electrical bell system. Two lamp type indicators are included in the system, one red with the marking "M" and the other is green with the marking "E", to indicate whether the orders apply to engines or to motors. It was stated that the submarines are not set up to run on motors and engines.

The system, which is considered to be of obsolete design, is similar to that installed in the O, R, and S class submarines of the U. S. Navy. No electrical system was provided.

h. Propeller Shaft RPM Indicator System

This system, which is of the voltmeter type, consists of a belt driven transmitter located in the engine room and indicators installed in conning tower, control room, main engine room and main motor room. A mechanical counter system which drives a four place counter located in the main engine room, is also provided. This system is not considered equal to or as accurate as the selsyn type system installed in some U. S. submarines but is considered equal to the voltmeter type as installed in the later submarines.

i. Underwater Log System

This system, which is selsyn operated, consists of an impeller type rod meter, master speed and distance transmitters located in the control room and indicators for speed and distance installed in the conning tower and control room. In addition, there is a distance indicator of the yardage (meter) type installed in the conning tower. This system is considered at least equal to those installed in U. S. submarines.

j. General Alarm System

This system consists of a contact maker located in the conning tower and control room and 20 volt D.C. vibrating type bells installed in each compartment. No automatic timer is provided and the system is controlled by manually operating the contact maker and holding it closed for approximately 30 seconds. The system is further augmented by the installation of red lamps in the engine room. The lamps, which are energized through a relay controlled by the contact makers, are connected across the 220 volt D.C. battery bus. This system, while providing satisfactory coverage of the vessel, is not considered equal to the general alarm system in U. S. submarines. The use of red lamps in noisy spaces is notable.

k. Diving Alarm System

This system is identical with the general alarm system except that the bells operate on 50 volt, 60 cycles A.C. and have a different tone. The red lamps are connected similarly to those in the general alarm system. No collision alarm system is installed but the diving alarm is used for this purpose by "keying" the contact maker to provide a coded signal. This system also provides satisfactory coverage for the purpose intended but is not considered equal to systems installed in U. S. submarines as the alarm signals used by the Japanese do not compare in loudness to the signals incorporated in the battle announcing system in U. S. vessels.

l. Hull Opening Indicator System

This system consists of contact makers installed on the main intake, main exhaust and main generator room valve and a lamp type indicator in the conning tower to show when the valves are open and shut. The system operated on 20 volts D.C. In airplane-carrier type submarines, indicators are provided for the hangar space hatches.

m. Valve Position Indicator System

This system is installed only for the hydraulically operated flood and vent valves and consists of a contact maker and an indicator panel in the plotting room (control room) at the diving station. The panel includes red and green lamps to indicate the open or shut condition of the respective valves. This system and the hull opening indicator system are not as extensive as the TP and TR circuits installed in U. S. submarines and do not provide similar safety in operation.

n. Clutch Indicator System

This system consists of a contact maker at the clutch operating mechanism and a lamp type indicator at the engine control station to indicate "in" or "out".

o Water in Oil Detector System

This system, which is for the purpose of detecting salt water in the oil, consists of a pair of electrodes (spaced 3 to 5mm apart) in the vacuum feed line between the oil stowage tank and the gravity feed tank. The electrodes are connected in series with a signal lamp and bell and when salt water bridges the electrodes the circuit is completed, thereby energizing the bell and lamp. The circuit is energized through an isolating transformer--50 volts, 60 cycles. No similar system is installed in U. S. submarines. The system may be of interest to the Bureau of Ships.

p. Systems Automatically Installed in U. S. Submarines But Not Used by the Japanese

The following systems customarily installed in U. S. submarines were not installed in Japanese submarines:

Electric whistle operating system

(A hand operated valve connected to the compressed air system is provided and is reported to satisfactorily replace this system.)

Lubricating oil alarm system

Depth and temperature indicator system

Engine water temperature alarm system

Battle announcing system

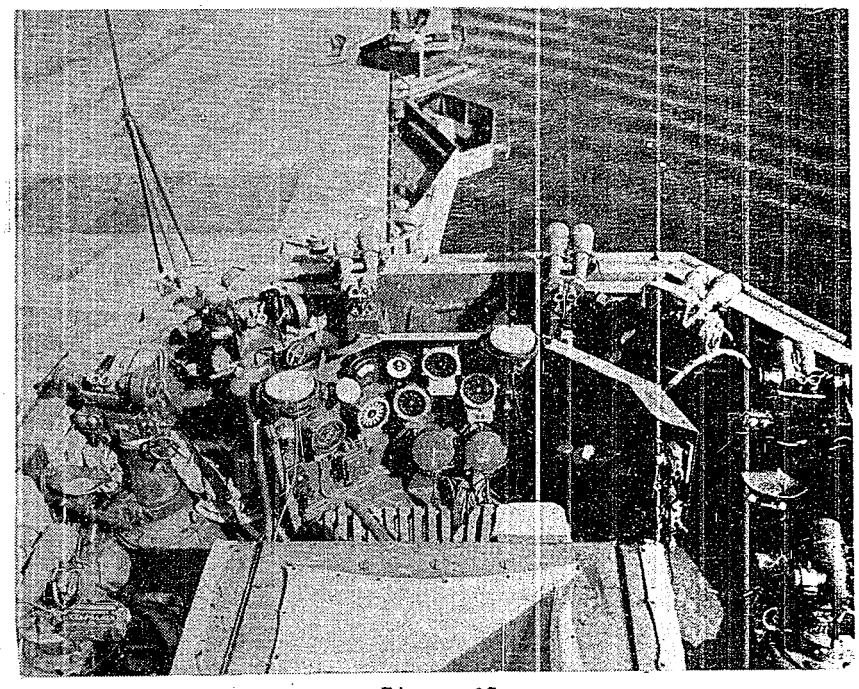

Figure 67
CV KATSURAGI
Open Bridge and AA Control Station

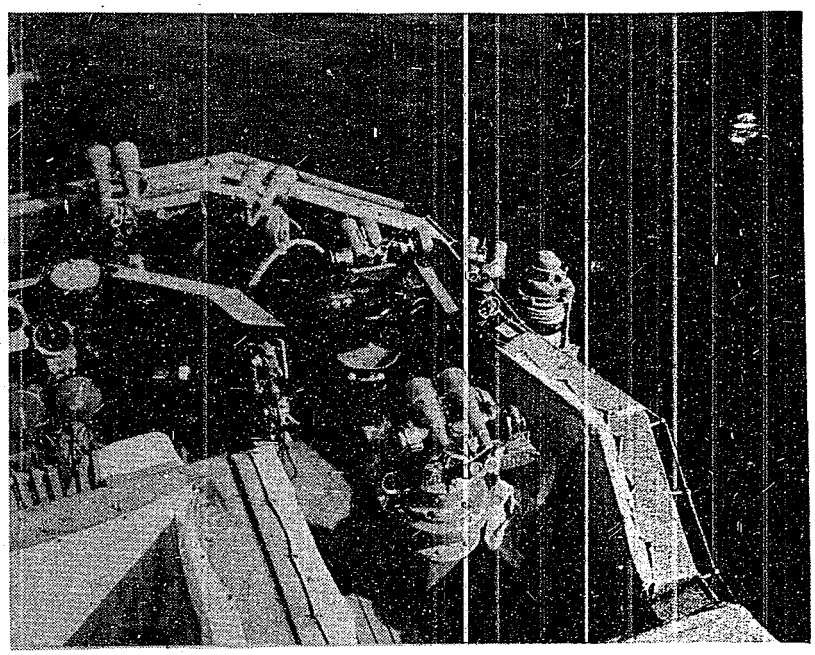

Figure 67a
CV KATSURAGI Open Bridge
and AA Control Station

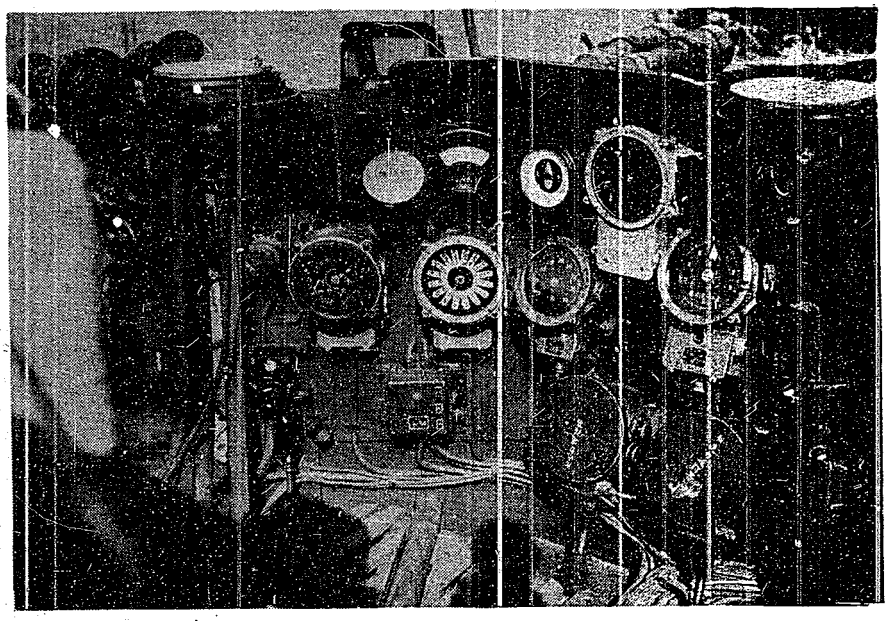

Figure 67b
CV KATSURAGI Open Bridge
and AA Control Station

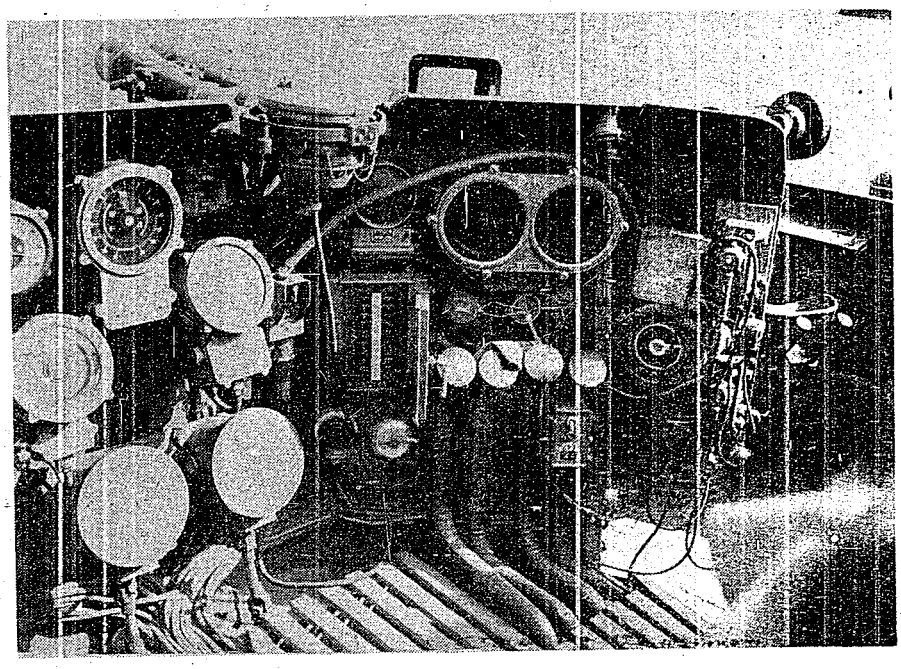

Figure 67c
CV KATSURAGI Open Bridge
and AA Control Station

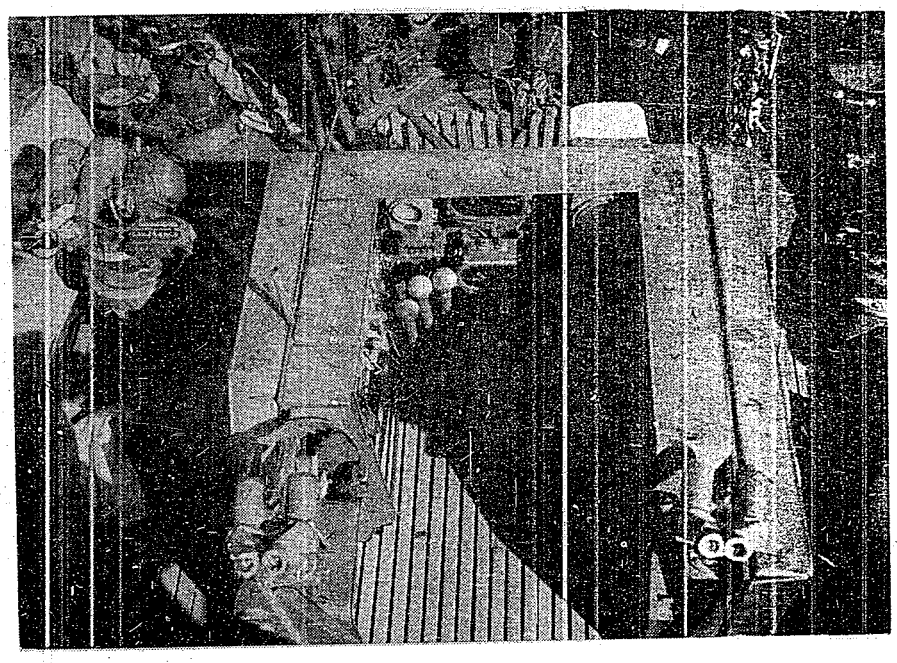

Figure 67d
CV KATSURAGI Open Bridge
and AA Control Station

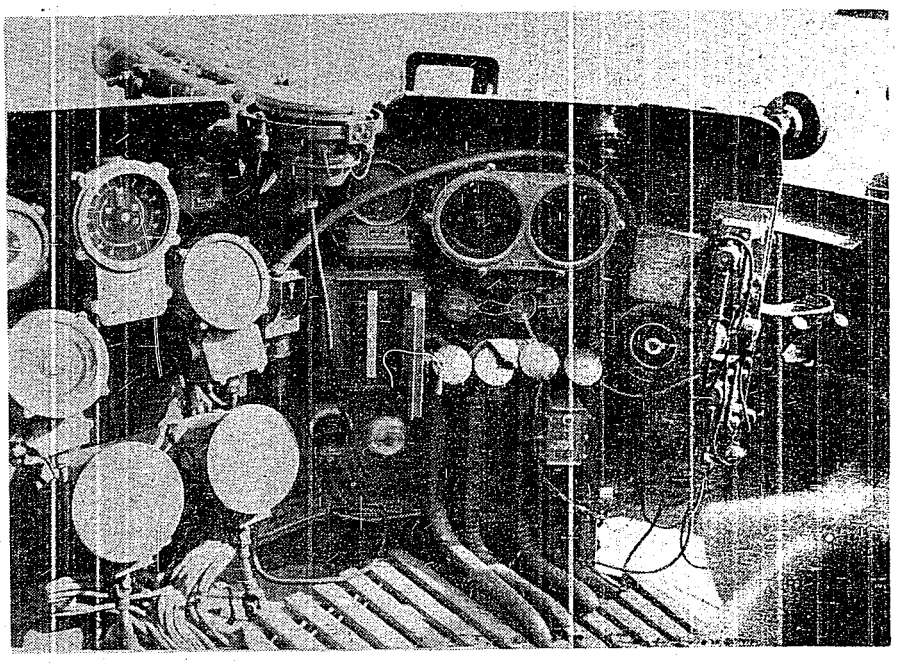

Figure 67c
CV KATSURAGI Open Bridge
and AA Control Station

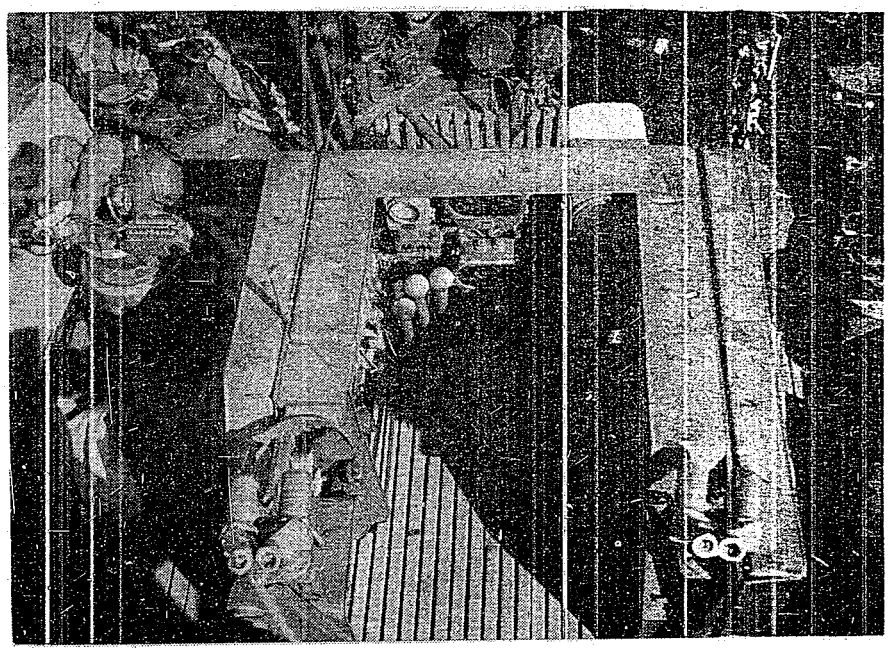

Figure 67d
CV KATSURAGI Open Bridge
and AA Control Station

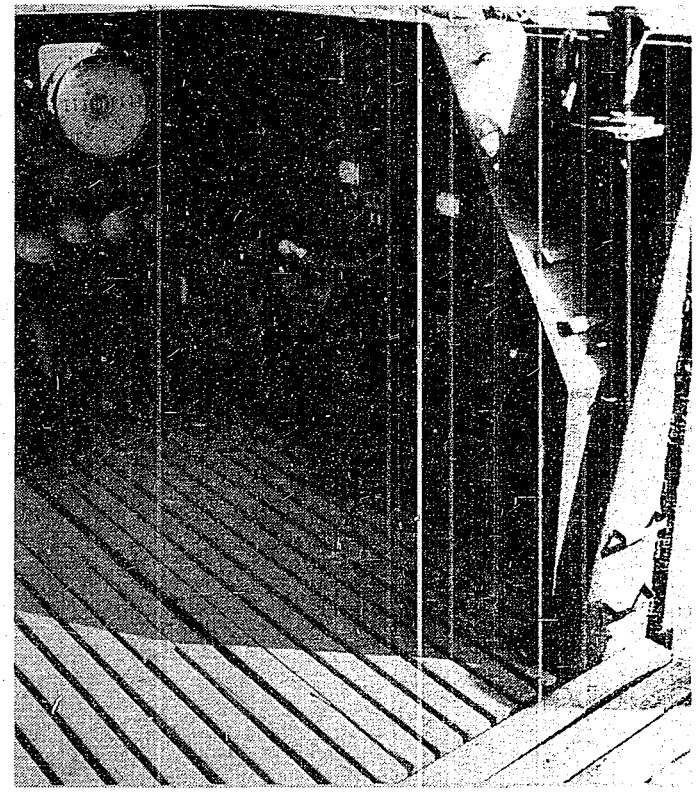

Figure 67e
CV KATSURAGI Open Bridge
and AA Control Station

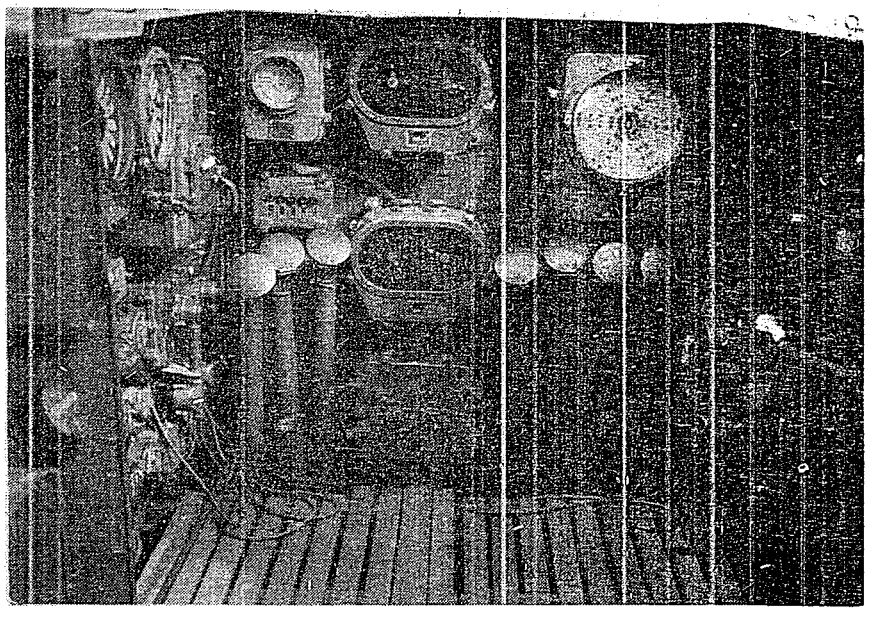

Figure 67f
CV KATSURAGI Open Bridge
and AA Control Station

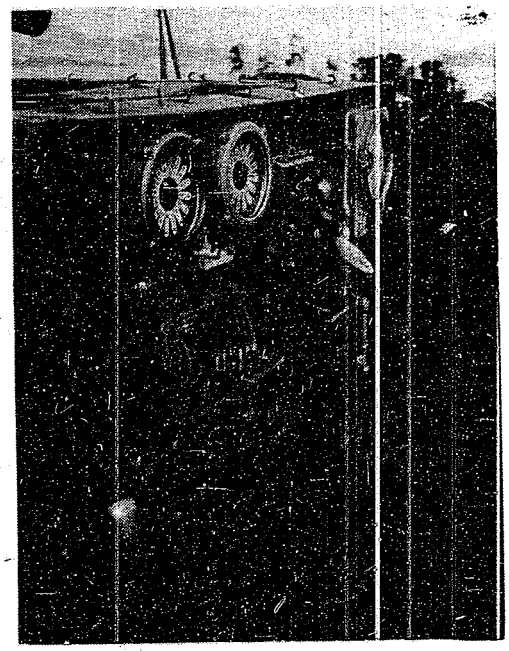

Figure 67g
CV KATSURAGI Open Bridge
and AA Control Station

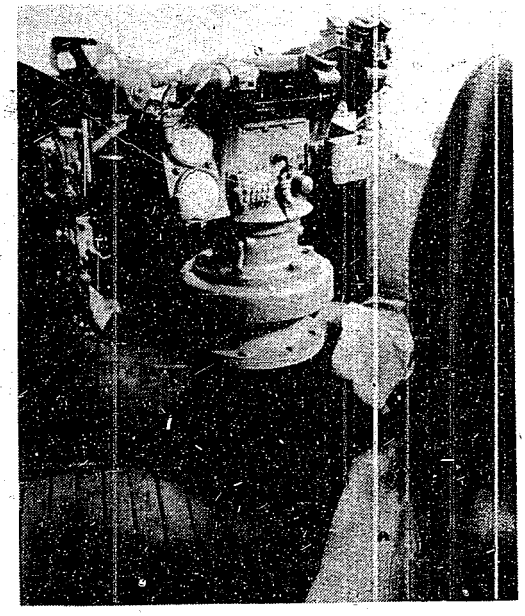

Figure 67h
CV KATSURAGI Open Bridge
and AA Control Station

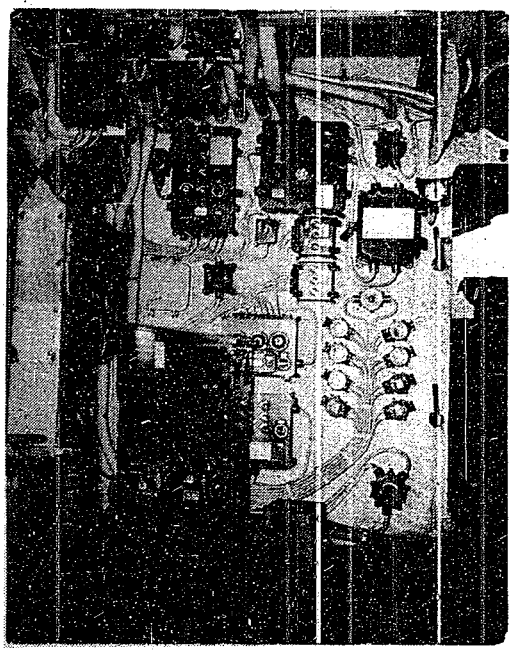

Figure 68
CV KATSURAGI
Control Bridge

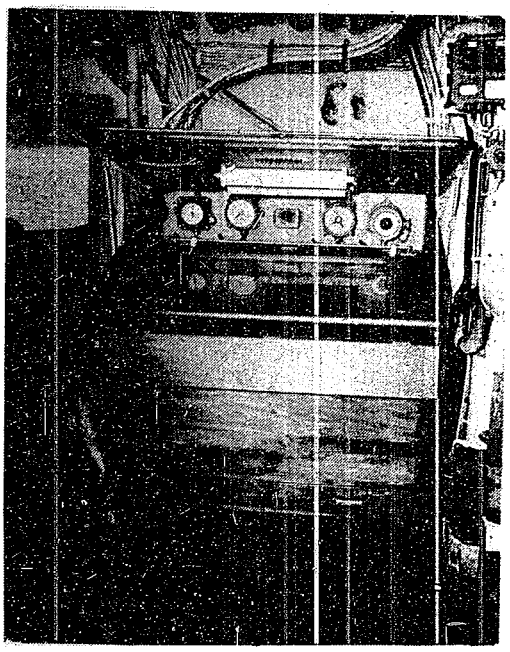

Figure 68a
CV KATSURAGI
Control Bridge

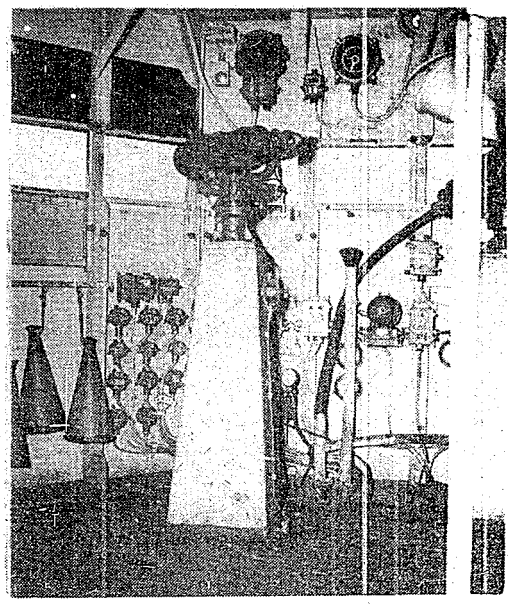

Figure 68b
CV KATSURAGI
Control Bridge

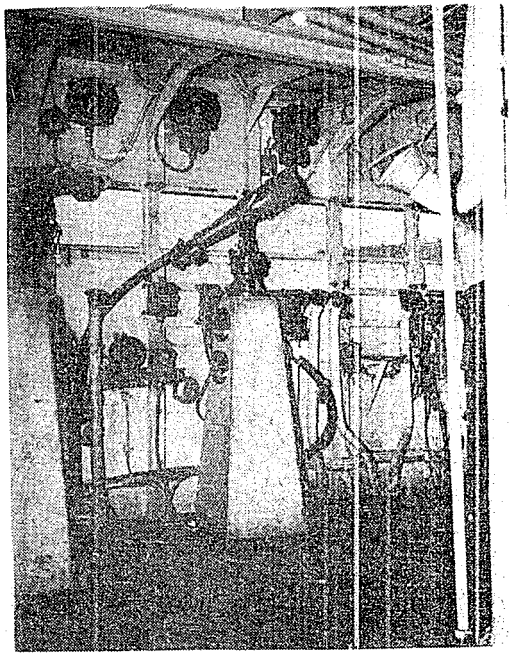

Figure 68c
CV KATSURAGI
Control Bridge

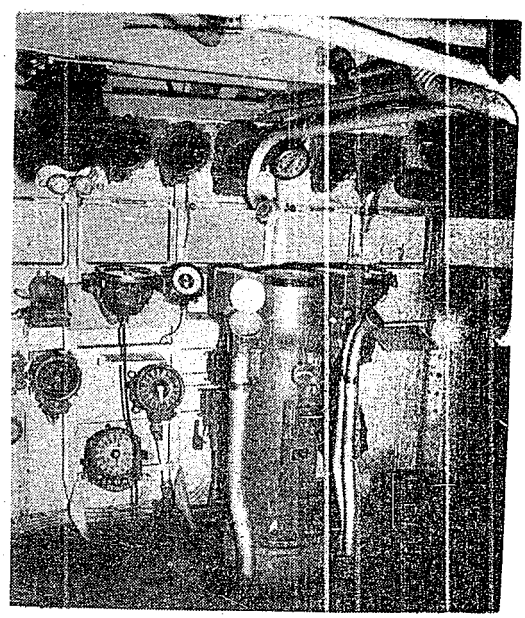

Figure 68d
CV KATSURAGI
Control Bridge

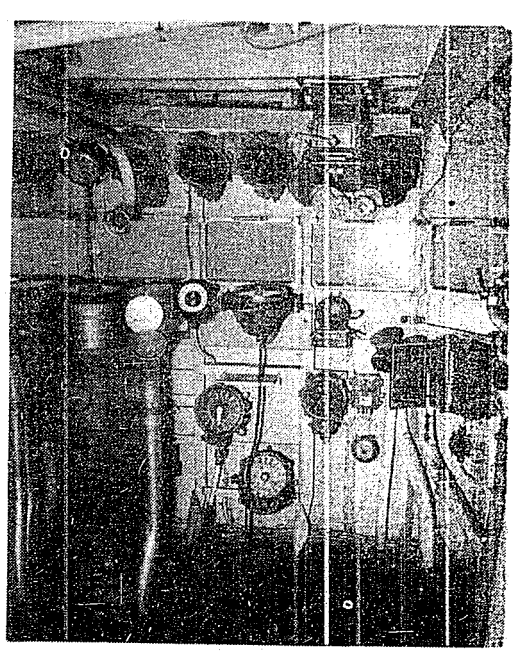

Figure 68e
CV KATSURAGI
Control Bridge

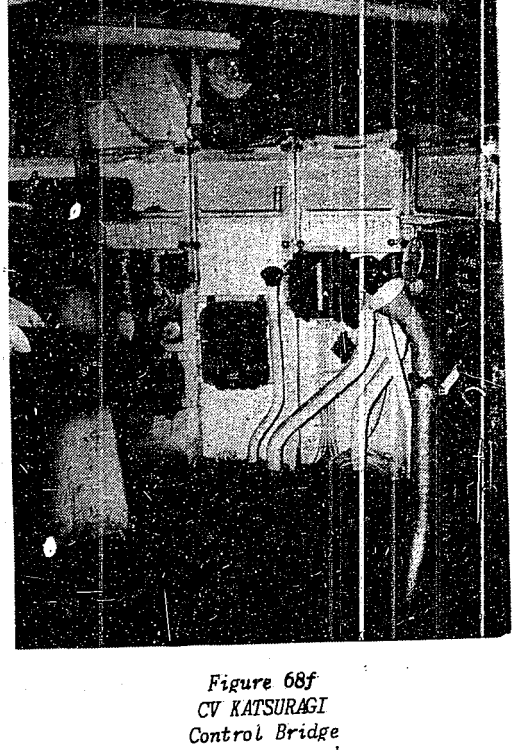

Figure 68f
CV KATSURAGI
Control Bridge



Figure 68g
CV KATSURAGI
Control Bridge



Figure 68h
CV KATSURAGI
Control Bridge

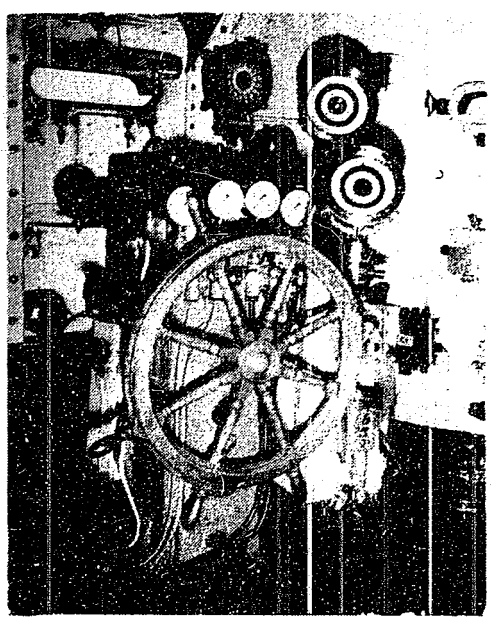

Figure 69
CV KATSURAGI
Steering Bridge

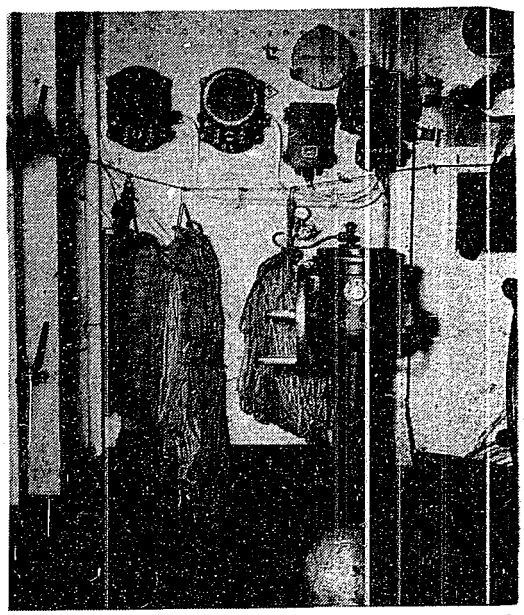

Figure 69a
CV KATSURAGI
Steering Bridge



Figure 69b
CV KATSURAGI
Steering Bridge

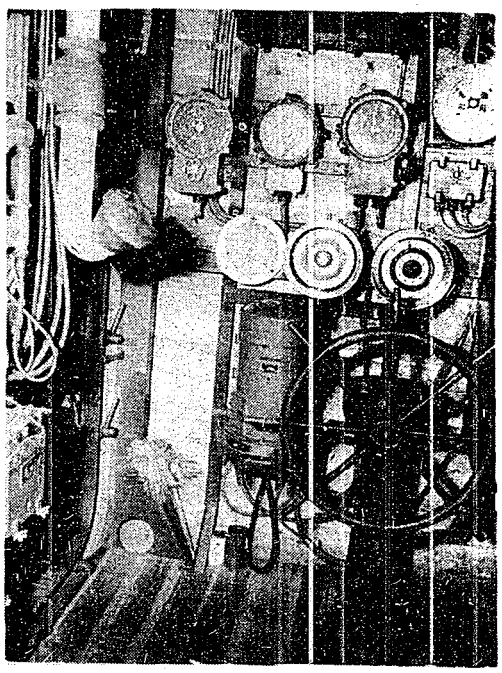

Figure 70
CV KATSURAGI
Steering Engine Room

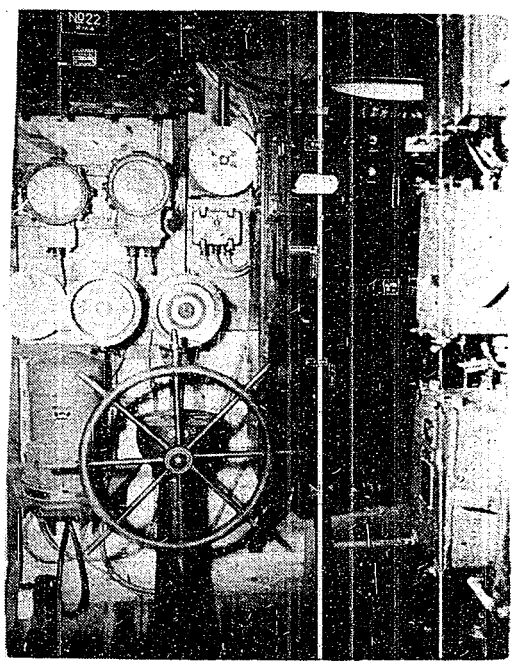

Figure 70a
CV KATSURAGI
Steering Engine Room

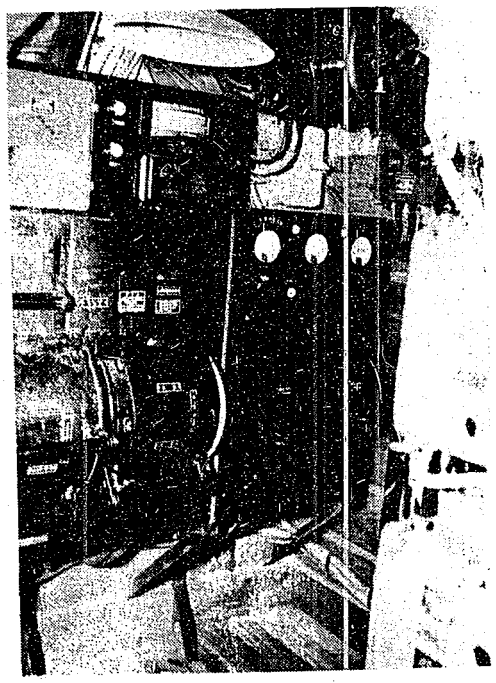

Figure 70b
CV KATSURAGI
Steering Engine Room



Figure 71
CV KATSURAGI
Engine Control Station



Figure 72
DD HANAZUKI
bridge



Figure 73
DD HANAZUKI
Bridge

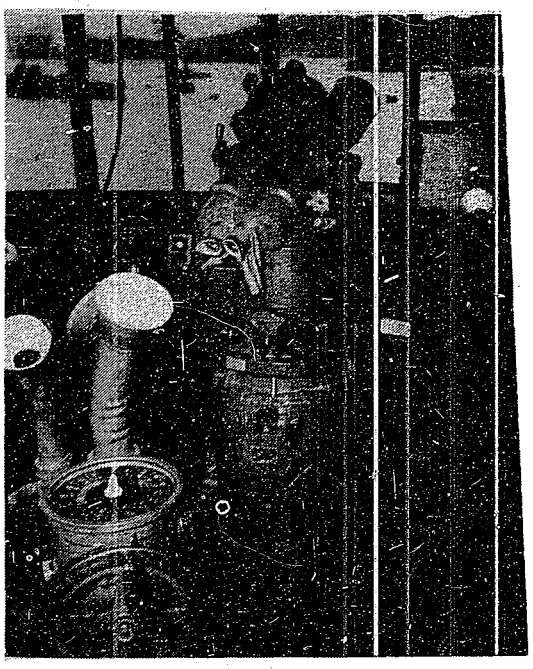

Figure 72b
DD HANAZUKI
Bridge

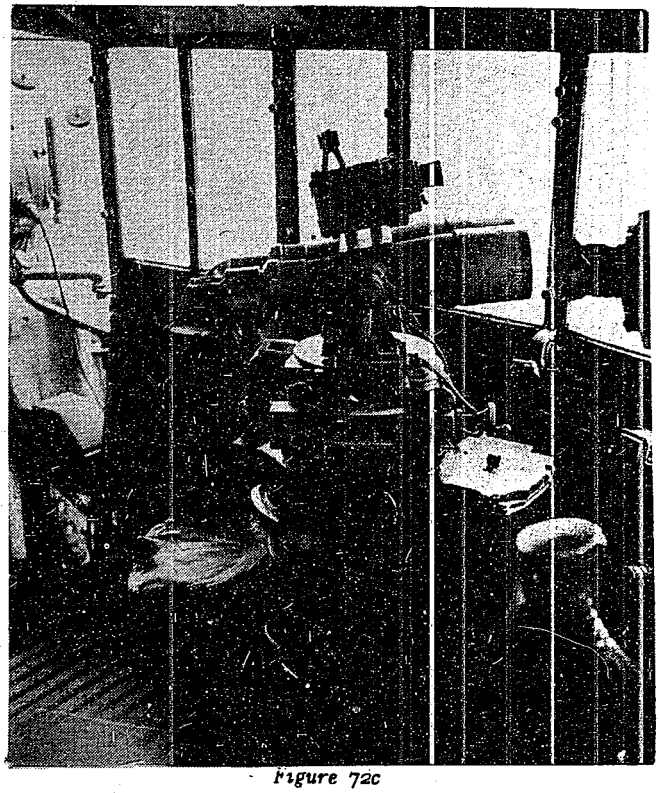

Figure 72c
DD HANAZUKI
Bridge

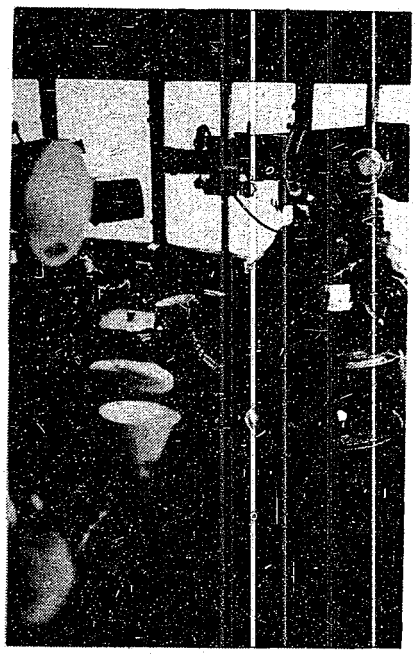

Figure 72d
DD HANAZUKI
Bridge

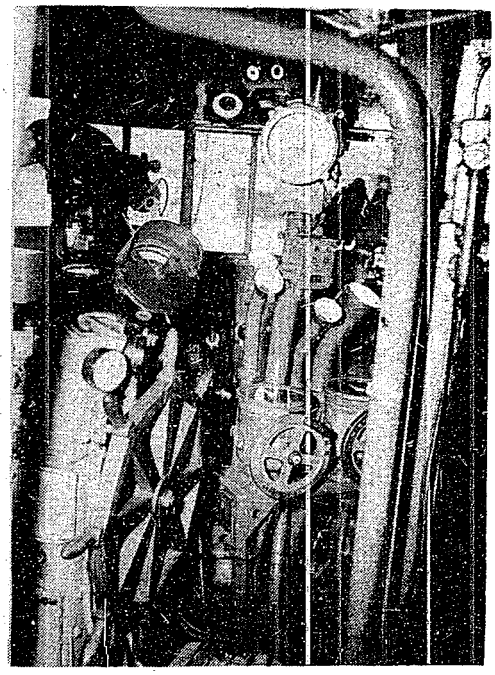

Figure 72e
DD HANAZUKI
Bridge

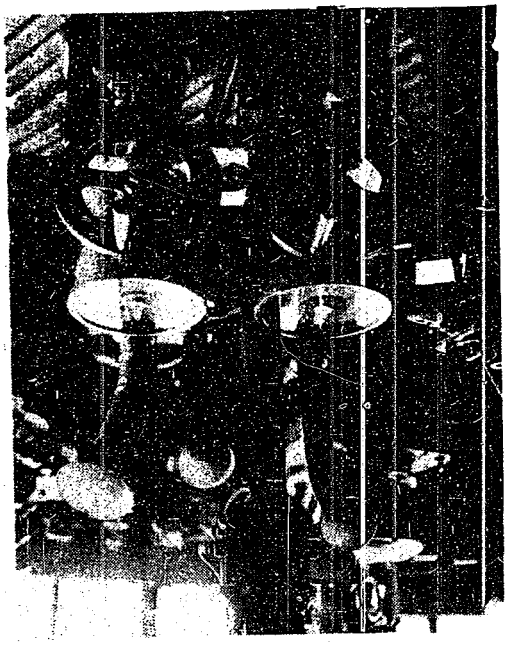

Figure 72f
DD HANAZUKI
Bridge

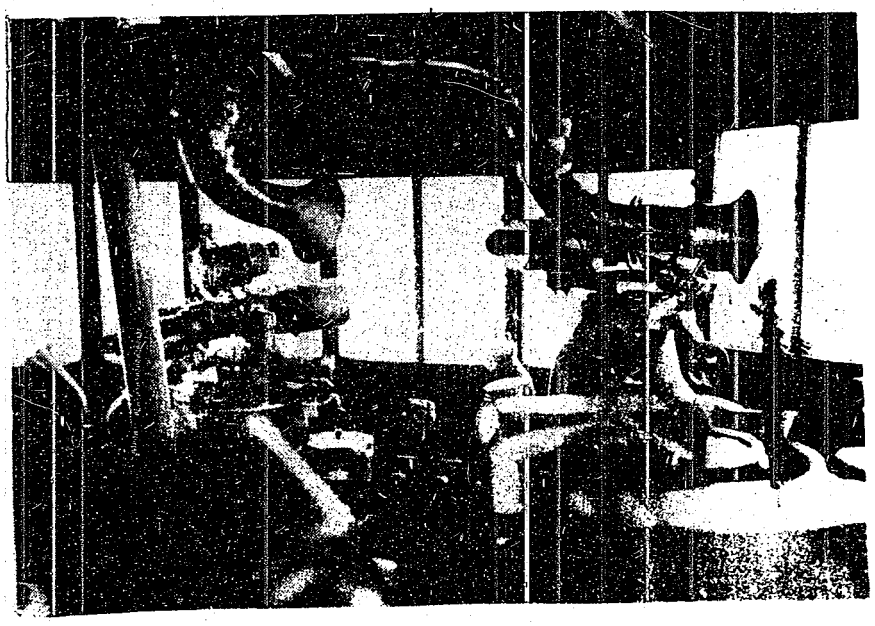

Figure 72g
DD HANAZUKI
Bridge

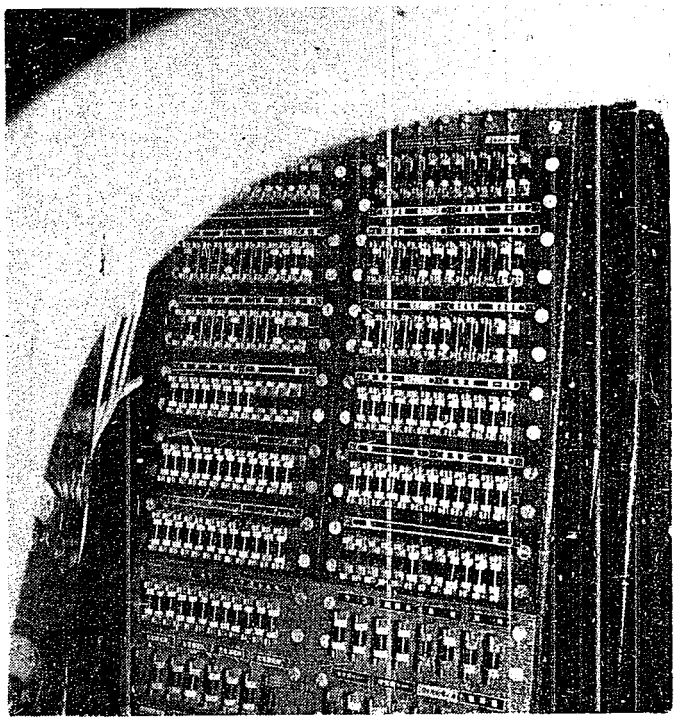

Figure 73
DD HANAZUKI
Gyro Room

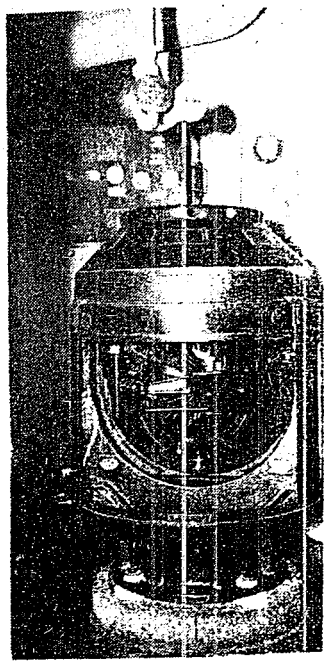

Figure 73a
DD HANAZUKI
Gyro Room

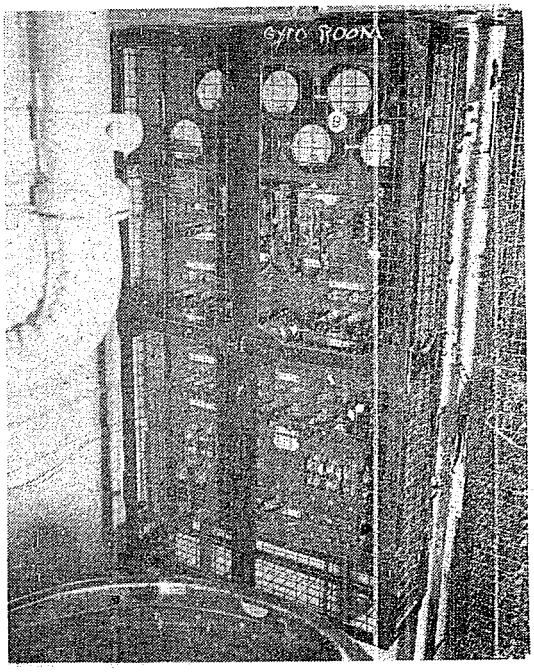

Figure 73b
DD HANAZUKI
Gyro Room

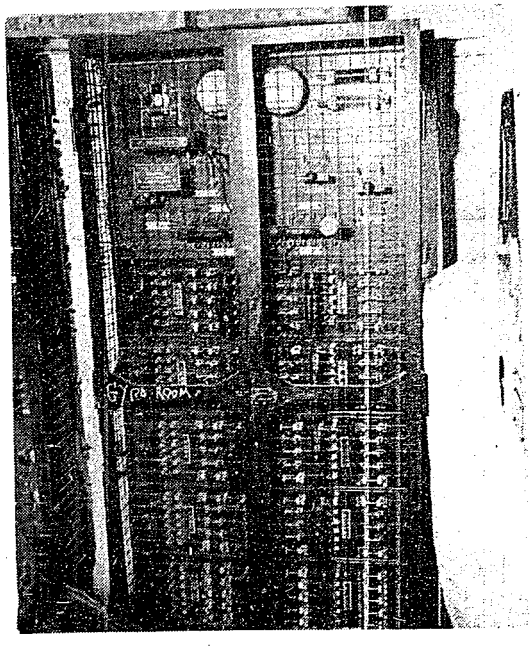

Figure 73c
DD HANAZUKI
Gyro Room

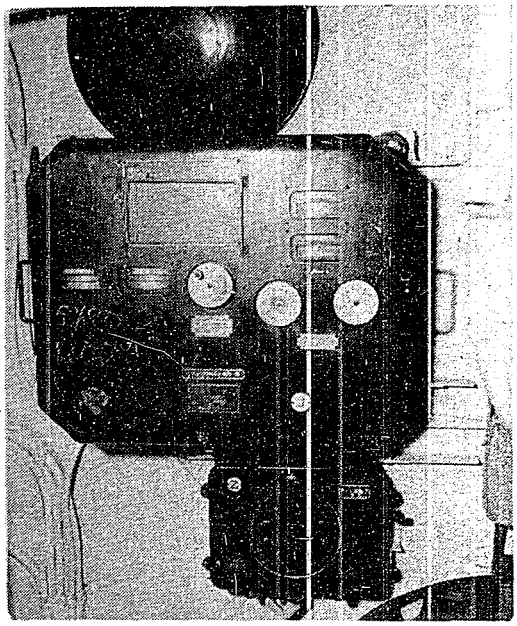

Figure 73d
DD HANAZUKI
Gyro Room

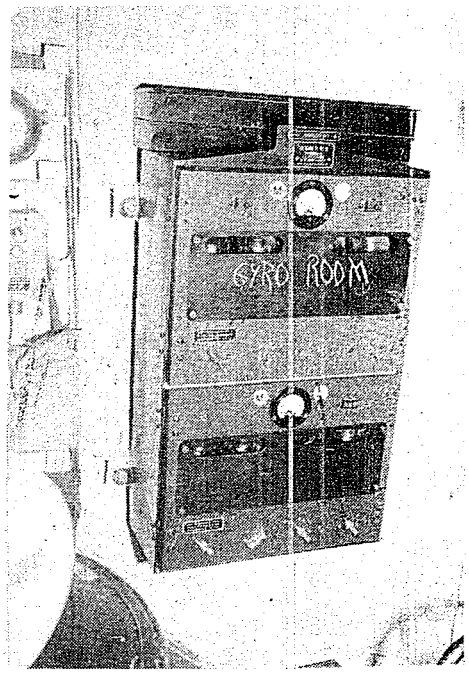

Figure 73e
DD HANAZUKI
Gyro Room

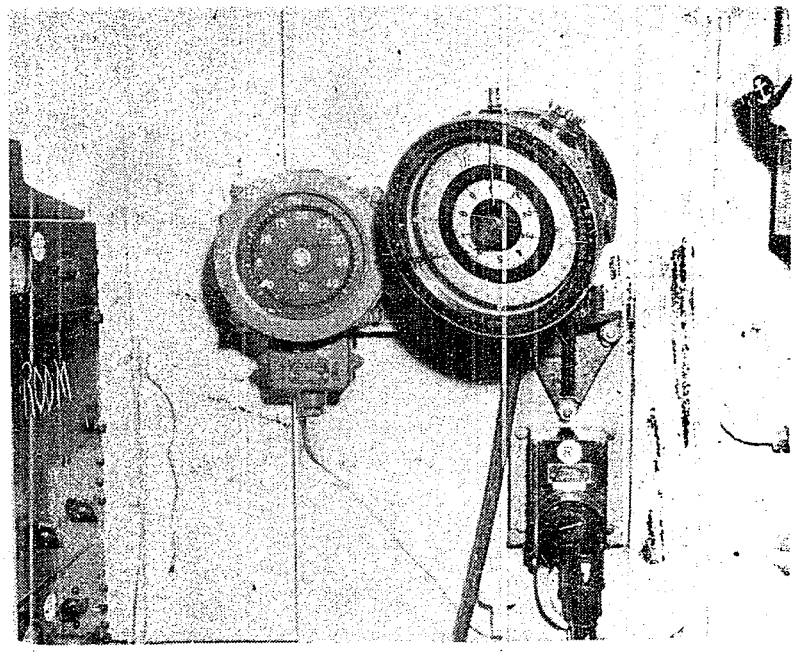

Figure 73f
DD HANAZUKI
Gyro Room

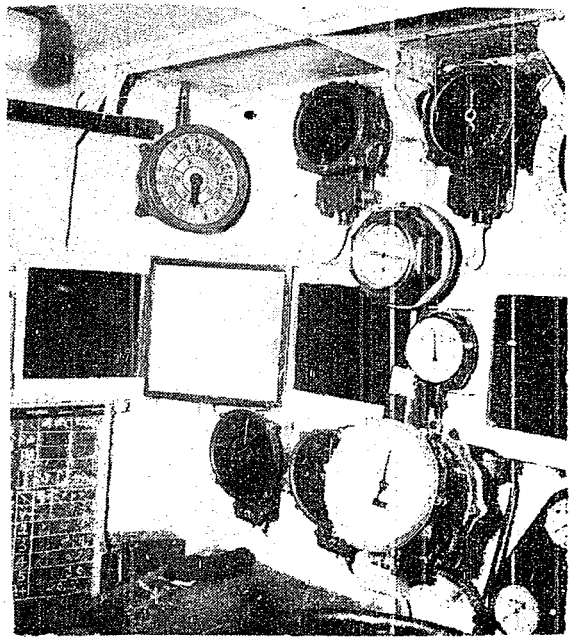

Figure 74
DD HANAZUKI
Main Engine Control and Throttle Station

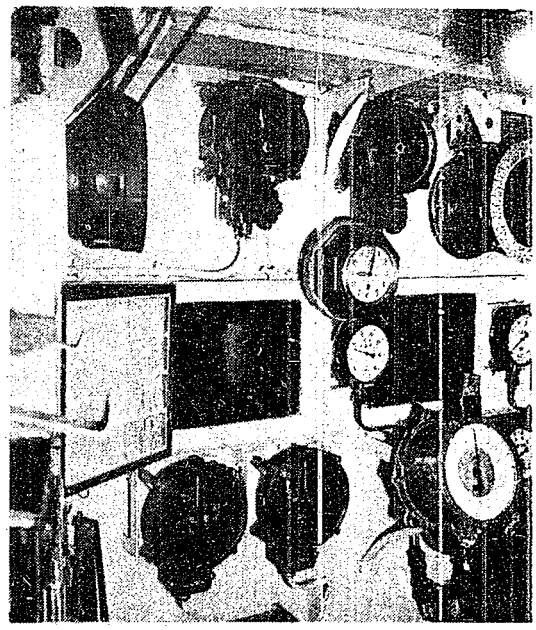

Figure 74a
DD HANASUKI
Main Engine Control and Throttle Station

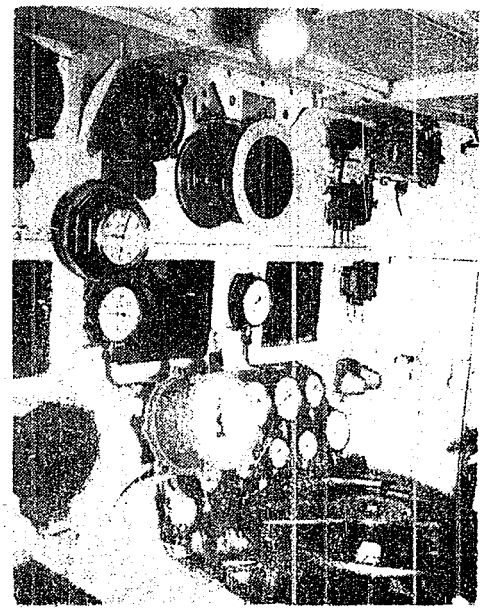

Figure 74b
DD HANASUKI
Main Engine Control and Throttle Station

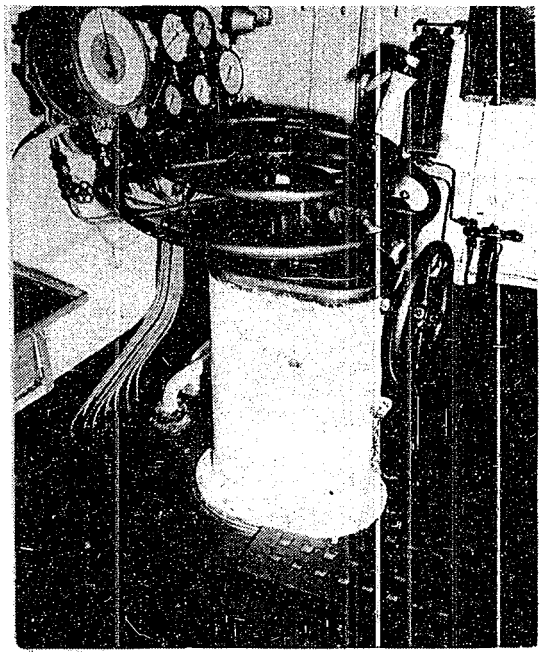

Figure 74c
DD HANAZUKI
Main Engine Control and Throttle Station

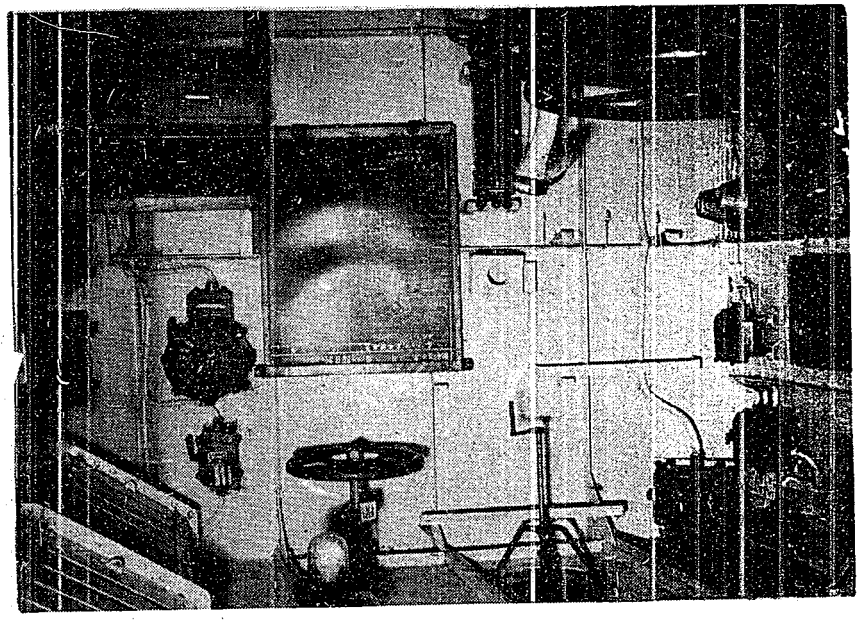

Figure 74d
DD HANAZUKI
Main Engine Control and Throttle Station

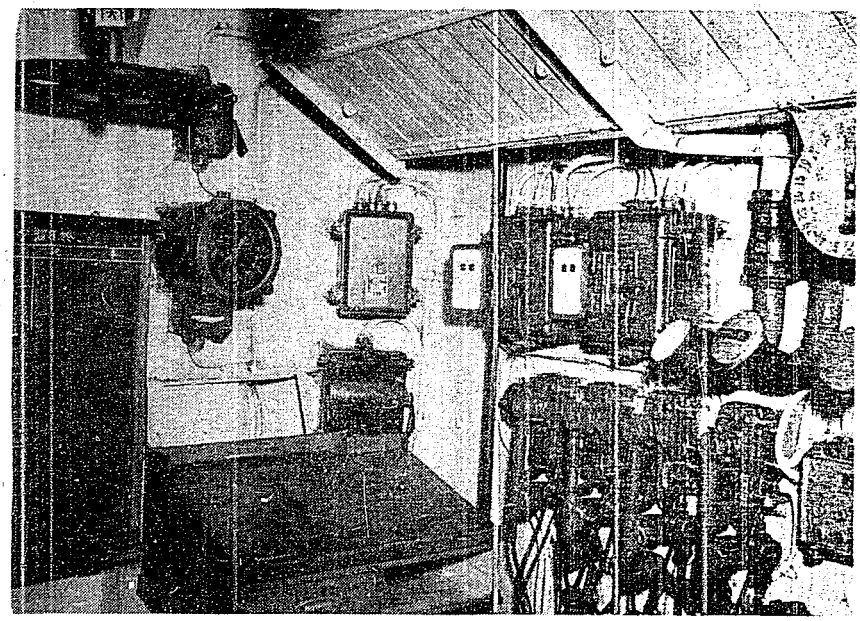

Figure 74e
DD HANAZUKI
Main Engine Control and Throttle Station

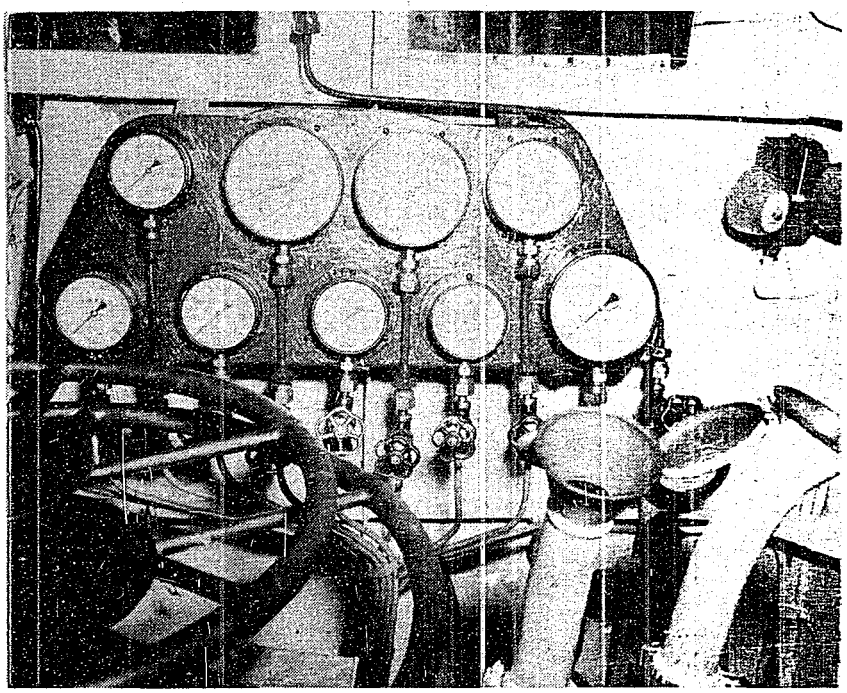

Figure 74f
DD HANAZUKI
Main Engine Control and Throttle Station

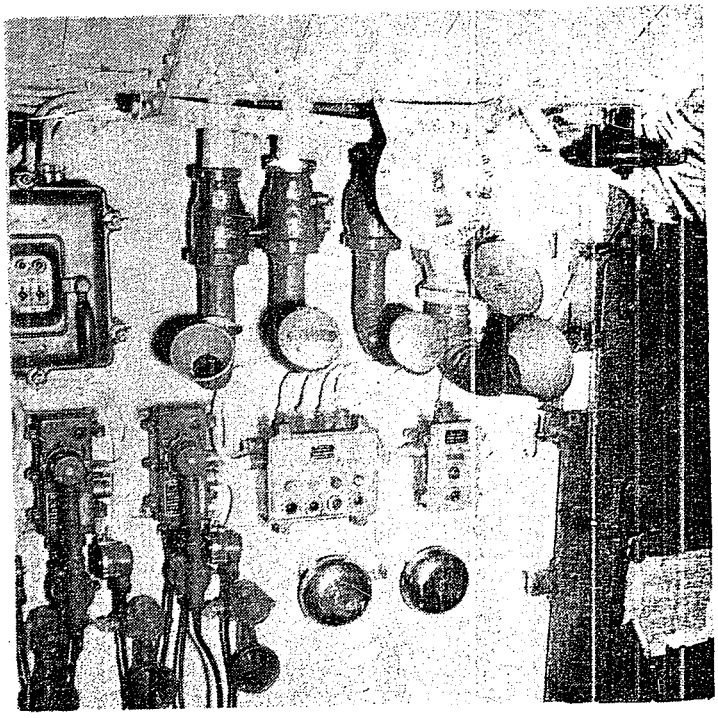

Figure 74g
DD HANAZUKI
Main Engine Control and Throttle Station

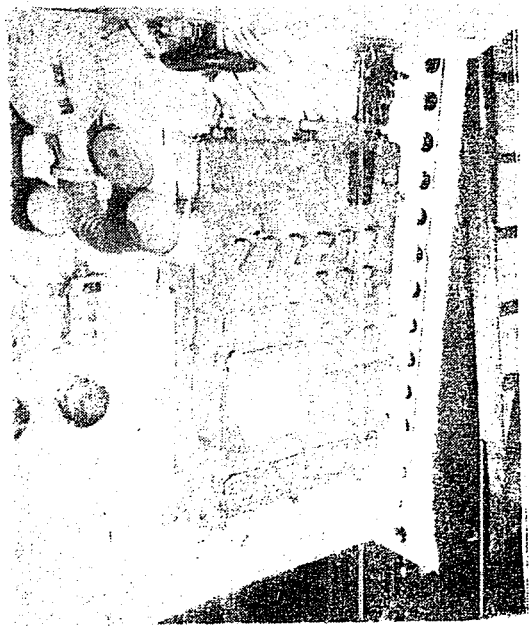

Figure 74h
DD HANAZUKI
Main Engine Control and Throttle Station

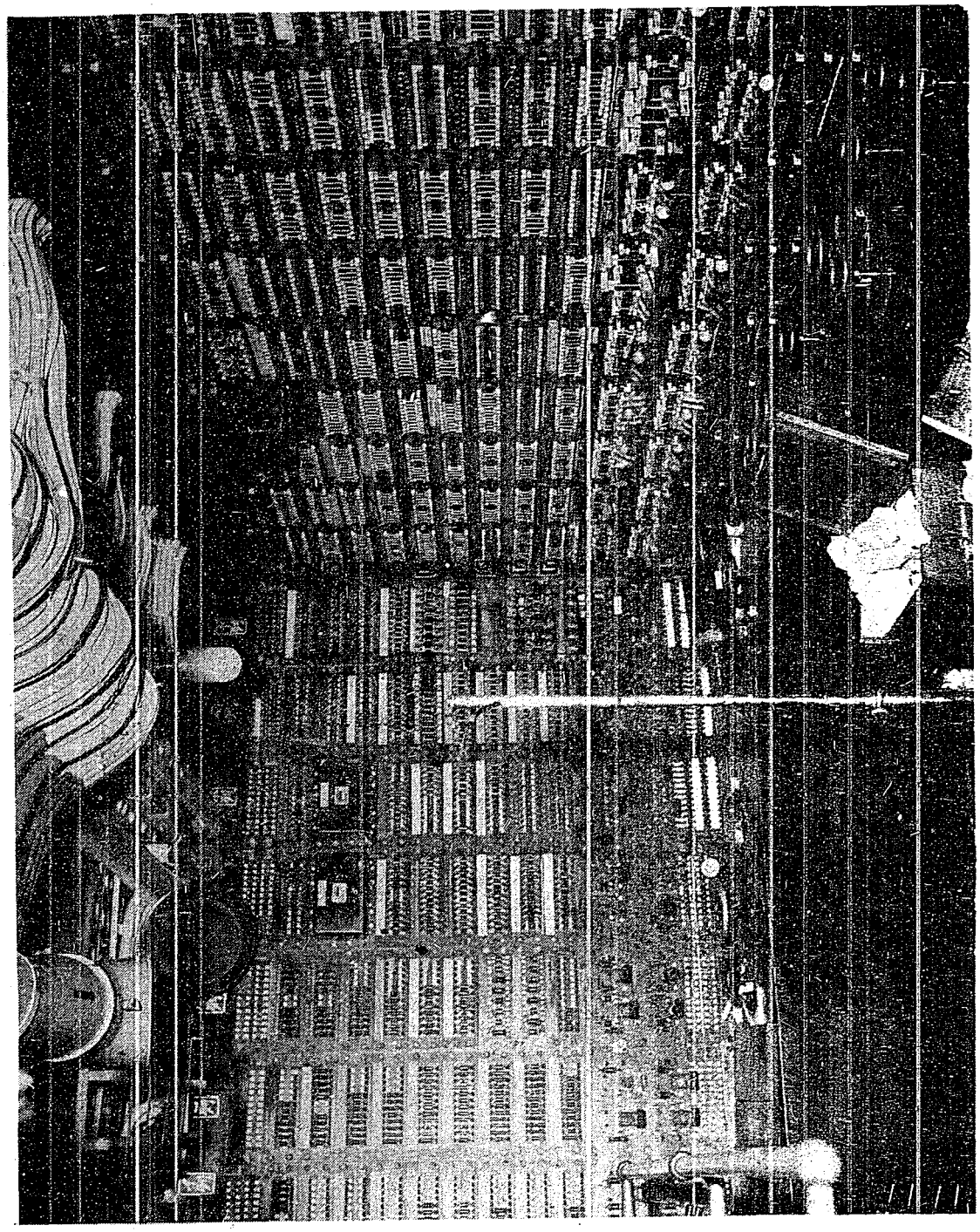

Figure 75
BB NAGATO
Interior Communication Room and Switchboard

Table V
1C EQUIPMENT LOCATION CHART - DESTROYERS

Destroyers	Bridge (contain steering station)	Conning tower	Secondary Conning tower	Central station	Distribution station (contained in forward switch board room)	Telephone Exchange	(Main Engine control station) Main Engine Room	Engine Room	Engine Room	Engine Room	Steering Machine Room After Steering Station	Gun Mounts	Turret	Fire control station	Plotting Room	Damage Control station	Communication Room	Radar Room	Anti aircraft Director	Anti aircraft Plot	Boiler Room 1-3
Rudder Angle system	X						X	X			X										
Emergency steering telegraph	X										X										
Steering telegraph	X										X										
Engine Order telegraph	X						X	X													X
Shaft R.P.M. system	X						X	X													
Underwater log system	X										X										
Call bell system	X						X	X			X			X			X				X
Non-battery telephone	X						X				X	X		X					X		
Battery telephone	X				X		X	X			X	X		X		X	X	X	X		X
Gas attack and general alarm system	X						X	X			X			X		X	X		X		X
Teletalk																					
Smoke screen signal	X						X														X
Smoke watch system	X																				X
Engine alarm system	X						X														X
Ship's whistle system	X																				
Rudder alarm system	X						X				X										
Oil pressure telegraph							X														X
Oil burner telegraph							X														X
Torsion Meter indicator							X	X													

Table VI
1C LOCATION CHART - AIRCRAFT CARRIERS

Aircraft Carriers	Bridge	Open Bridge	Secondary Conning tower	Central station	Distribution station	Telephone Exchange	Main Engine Control station	Main Engine Room	Engine Room	Engine Room	Engine Room	Steering station	Steering Machine Room	After Steering Station	Gun Mounts	Turret	Fire Control station	Plotting Room	Damage Control station	Communication Room	Radar Room	Anti aircraft Director	Anti aircraft Plot	Boiler Room 1-8
Rudder Angle system	X	X					X	X	X	X	X	X	X	X				X	X					
Emergency steering telegraph												X	X	X										
Steering telegraph	X	X										X	X	X										
Engine Order telegraph mechanical							X	X	X	X	X	X												
Engine Order telegraph electrical							X	X	X	X	X	X												X
Shaft R.P.M. system	X						X	X	X	X	X	X												X
Underwater log system	X	X										X	X	X				X	X				X	
Call bell system	X	X					X	X	X	X	X	X	X	X			X	X	X	X		X	X	X
Non-battery telephone	X						X						X	X	X		X					X		
Battery telephone	X	X			X	X	X	X	X	X	X	X	X	X	X		X	X	X	X	X	X		X
Gas attack and general alarm system	X				X		X		X	X	X	X	X	X				X	X	X				X
Teletalk	X	X					X										X	X	X	X				
Smoke screen signal	X						X																	X
Smoke watch system																								X
Engine alarm system	X						X	X	X	X	X													X
Ship s whistle system	X																							
Rudder alarm system	X						X					X	X											
Oil pressure telegraph																								X
Oil burner telegraph																								X
Torsion Meter indicator								X	X	X	X													

Table VII
LC EQUIPMENT LOCATION CHART - CRUISERS

Cruisers	Bridge	Conning tower	Secondary Conning tower	Central station	Distribution station	Telephone Exchange	Main Engine Control station	Main Engine Room	Engine Room	Engine Room	Engine Room	Steering station	Steering Machine Room	After Steering Station	Gun Mounts	Turret	Fire Control station	Plotting Room	Damage Control station	Communication Room	Radar Room	Anti aircraft Director	Anti aircraft Plot	Boiler Room 1-8
Rudder Angle System	X						X	X	X	X	X	X	X	X					X					
Emergency steering telegraph												X	X	X										
Steering telegraph	X											X	X	X										
Engine Order telegraph							X	X	X	X	X	X												X
Shaft R.P.M. system	X						X	X	X	X	X	X												
Underwater log system	X											X	X	X				X	X				X	
Call bell system	X						X	X	X	X	X	X	X	X		X	X	X	X	X		X	X	X
Hom-battery telephone	X						X						X	X	X	X	X		X			X		
Battery telephone	X				X	X	X	X	X	X	X	X	X	X	X	X	X	X	X	X	X	X	X	X
Gas attack and general alarm system	X				X		X	X				X	X	X		X	X	X	X	X			X	X
Telstalk	X						X										X		X	X		X		
Smoke screen signal	X						X																	X
Smoke watch system	X																							X
Engine alarm system	X						X	X	X	X	X													X
Ship's whistle system	X																							
Rudder alarm system	X						X					X	X											
Oil pressure telegraph																								X
Oil burner telegraph																								X
Torsion Meter indicator								X	X	X	X													

RESTRICTED

Table VIII
1C EQUIPMENT LOCATION CHART - BATTLESHIPS

Battleships	Bridge	Conning tower (contain steering station)	Secondary Conning tower	Central station	Distribution station	Telephone Exchange	Main Engine Control station	Main Engine Room	Engine Room	Engine Room	Engine Room	Steering Machine Room	After Steering Station	Gun Mounts	Turret	Fire Control station	Plotting Room	Damage Control station	Communication Room	Radar Room	Anti aircraft Director	Anti aircraft Plot	Boiler Room 1-8-12
Rudder Angle System	X	X	X				X	X	X	X	X	X	X					X					
Emergency steering telegraph		X	X									X	X										
Steering telegraph	X	X	X									X	X										
Engine Order telegraph		X	X				X	X	X	X	X												X
Shaft R.P.M. system	X	X	X				X	X	X	X	X												
Underwater log system	X	X	X									X	X				X	X				X	
Call bell system	X	X	X				X	X	X	X	X	X		X	X	X	X	X	X		X	X	X
Non-battery telephone	X	X	X				X					X	X	X	X	X		X			X		
Battery telephone	X	X	X		X	X	X	X	X	X	X	X	X	X	X	X	X	X	X	X	X	X	X
Gas attack and general alarm system	X	X	X		X		X	X	X	X	X	X		X	X	X	X	X	X			X	X
Teletalk	X	X					X									X		X	X		X		
Smoke screen signal	X	X					X																X
Smoke watch system	X																						X
Engine alarm system	X						X	X	X	X	X												X
Ship's whistle system	X																						
Rudder alarm system	X	X	X				X					X											
Oil pressure telegraph																							X
Oil burner telegraph																							X
Torsion Meter indicator								X	X	X	X												

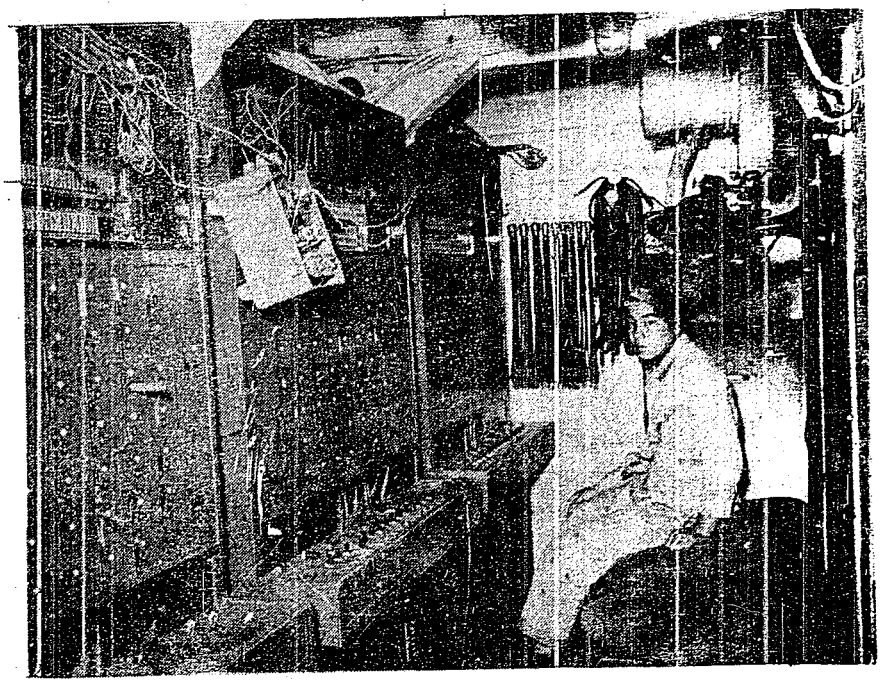

Figure 76
CV KATSURAGI
Telephone Switchboard

B. INTERIOR COMMUNICATION EQUIPMENT

1. General Comments

I.C. equipment in the Japanese Navy falls into two categories (using U. S. Navy equipments as the standard):

Obsolete equipment

Comparable equipment

There was no evidence of Japanese I.C. equipment superior in design to that of U. S. Navy equipment. Aside from several interesting design features in the Japanese equipment there was little new art or development.

In some instances, Japanese I.C. equipment provided fewer functions and less elaborate facilities than similar U. S. Navy equipment. In these instances, there was a resulting reduction in size, weight and complication. The teletalk equipment is an example. Where the performance and facilities of the Japanese equipment were the same as U. S. Navy equipment, the size, weight and degree of complication were at least equal. The Japanese showed definite evidence of having given serious consideration to the caliber of personnel available to maintain and operate the equipment, the available facilities to manufacture it and the minimum requirements for successful operation.

The following Japanese I.C. equipment is considered obsolete:

a. Announcing equipment

b. Telephone equipment

c. Salinity indicator

d. Propeller shaft RPM indicator

e. Motion picture equipment

The following supplementary comments apply to the above:

a. The announcing equipment utilized a vacuum tube time delay circuit which eliminated mechanical-electrical time relays. This circuit gave considerable trouble.

b. The battery telephone equipment was completely lacking in automatic switching facilities. The sound powered telephones were very low in sensitivity as were their associated ringers. They were also heavy. The rubber covered handset and double seal type of earcap used with sound powered phones are worthy of note and of further consideration.

c. The salinity indicator was comparable to the U. S. equipment of 1925 with the exception that it did have provision for automatic temperature compensation.

d. The best Japanese propeller shaft RPM equipment was comparable to that now used on small U. S. Navy vessels and submarines, where accuracy is not a requirement.

e. The motion picture equipment was of commercial design and capable of electrical performance not to exceed that of U. S. equipment of 1930.

With the exception of the motion picture and announcing equipment, the above equipments were designed (insofar as materials and construction are concerned) along generally acceptable lines for naval service.

The following items of Japanese equipment were considered comparable to U. S. Navy equipment:

a. Wind indicator equipment

b. Telegraph systems

c. Gyro compass

d. Log system

Comments apply as follows:

a. The wind indicator equipment was similar in design and construction to U. S. Navy equipment and capable of comparable performance, according to data of the Japanese.

b. The Japanese electrical (selsyn) type telegraphs appeared to be of German origin. While its sensitivity and accuracy were not considered equal to U. S. Navy equipment, it was good.

c. The gyro compasses used by the Japanese were manufactured under licenses obtained from Anschutz (German) and Sperry (American). The Japanese compasses were of modern design but not equal to the latest American designs. They were capable of good performance.

d. The Japanese log equipments utilized the same principles of operation as the U. S. log systems. The Type 92 log used the impeller

contact in a different manner than the U. S. system for determining speed.

This equipment generally was of good design and construction and was reported by the Japanese to have performed well in service.

2. Public Address Equipment

This section of the report is intended to generally describe and point out the merit of general announcing, flight and hangar deck announcing, teletalk and portable announcing systems used by the Japanese Navy.

Photographs, where items of equipment were available, have been substituted for assembly and detail drawings, where the items of Japanese equipment obviously were inferior to items currently in use in the U. S. Navy for the same application.

The conclusions reached, as a result of the investigations conducted on Japanese announcing equipment, are supported by performance data, primarily in curve form, included in this report.

The schematic diagrams of typical announcing systems of modern Japanese design have been included for further scrutiny by interested personnel inasmuch as only the circuits and features deserving special attention have been described in detail herein.

Samples of the reproducers and microphones to which reference has been made have been sent to the Bureau of Ships for further examination. Reproducer SPL-2 is an obsolete American design and SPL-1 a poor, reduced scale copy, neither of which justify further attention. Plans of these units have been forwarded to the Bureau of Ships for record purposes.

This section deals with the following Japanese announcing systems:

Japanese	U. S. Navy Equivalent
General Defense System	Circuit 1 MC
Engineer's Defense System	Circuit 2 MC
Damage Control Defense System	
Hanger Deck Defense System	Circuit 3 MC
Flight Deck Defense System	Circuit 5 MC
Teletalk Defense System	Circuit 18 MC
Portable Announcing Equipment	----

Personnel formerly in the Japanese Navy and engineering representatives of Japanese manufacturers familiar with the equipment covered by this report were interrogated concerning the development, design and performance of the equipment. The information and data supplied have been correlated, insofar as possible, with the samples, and every effort made to ascertain that it is correct. Reasons for deviations from expected performance were requested and obtained and are included in the report.

The equipments investigated will be covered by circuits or systems, for purpose of clarity, and where possible, a direct comparison with the comparable system currently in use in the U. S. Navy will be made.

a. General Defense, Damage Control and Engineer's Announcing System

The Japanese equipment is of a semi-commercial design, utilizing in many cases American designs (primarily old ones) of commercial items for microphones, loudspeakers etc.

RESTRICTED

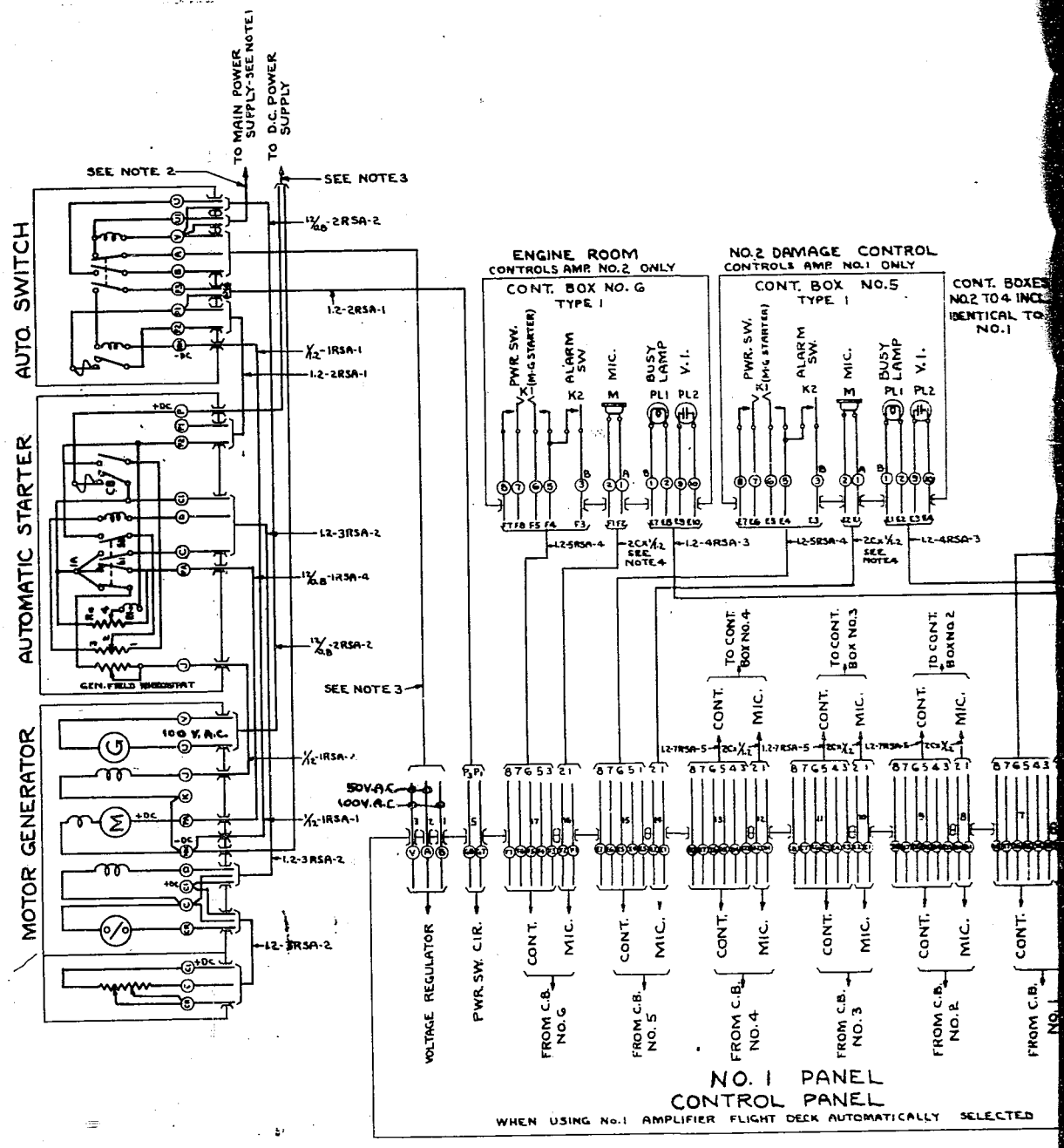

TABLE No. 1

LENGTH OF CABLE.	SIZE OF CABLE	
MAIN PWR. INSTALL'N.	50 VOLT	
25 METERS APP.	13/0.8-2RSA-3	
50 " "	30/0.8-2RSA-4	
100 " "	13/1.1-2RSA-5	
150 " "		

TABLE No. 2

LENGTH OF CABLE.		SIZE OF CABLE		
A.C. INSTALLATION	D.C. INSTALLATION	50 VOLT	100 VOLT	220 VOLT
25 METERS APP.	25 METERS APP.	19/0.8-1RSA-5	7/0.8-1RSA-3	1/1.6-1RSA-2
50 " "	50 " "	30/0.8-1RSA-6	13/0.8-1RSA-4	7/0.8-1RSA-3
100 " "	100 " "	37/0.8-1RSA-7	19/0.8-1RSA-5	12/0.8-1RSA-4
150 " "	150 " "	36/0.8-1RSA-8	30/0.8-1RSA-6	19/0.8-1RSA-4

BLOCK DIAGRAM

CONT. BOX No. 1-FLAG BRIDGE
" " " " 2-QTR. DECK (FWD)
" " " " 3-No. 1 DAMAGE CONTROL OFF. — MON. SPK. FOR No. 2 & 4 STATION
" " " " 4-QTR. DECK (AFT)
" " " " 5-No. 2 DAMAGE CONTROL
" " " " 6-ENGINE ROOM

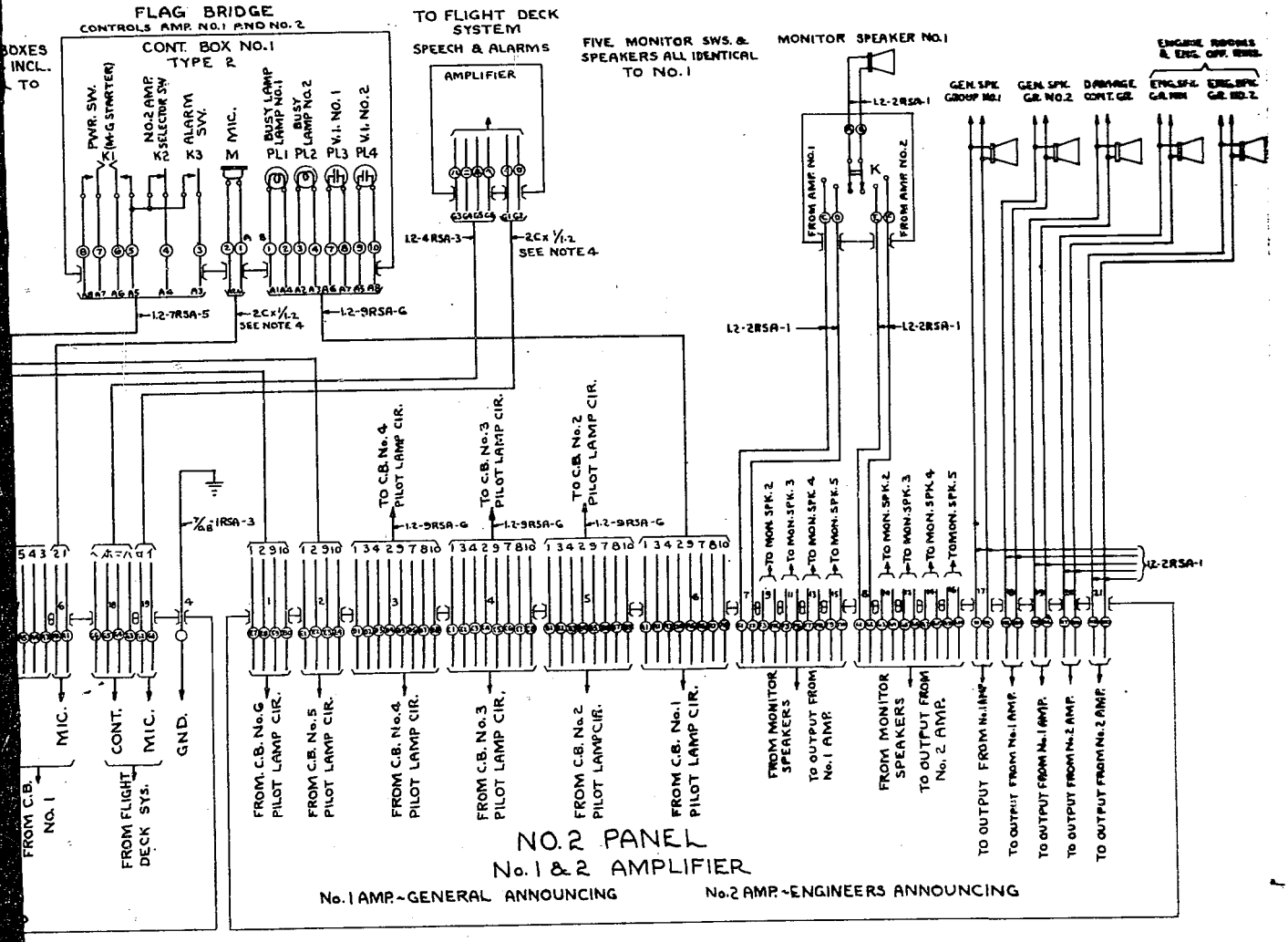

NOTES:

1. WIRE AS SHOWN FOR 50 VOLT A.C. MAIN POWER SUPPLY. IF 100 VOLT A.C. IS USED AUTO. SWITCH TERMINALS A & B ARE TO BE SHORTED AND WIRE A-A OMITED.
2. FOR CABLE SIZE SEE TABLE No. 1.
3. FOR CABLE SIZE SEE TABLE No. 2.
4. MICROPHONE LEADS TO BE RUN IN LEAD SHIELDED CABLE. CABLES SHALL NOT BE PLACED NEAR OR IN PARALLEL WITH OUTPUT CABLES OR POWER CABLES.
5. GENERAL ANN. AND DAMAGE CONTROL ARE LIMITED TO 30 SPEAKERS PER GROUP. ENGINEERS ANN. LIMITED TO 50 SPEAKERS PER GROUP. MAX. 200 SPEAKERS USED PER VESSEL.
6. CONNECTING DIAGRAM FOR TYPE 204 & 204A FLIGHT DECK CIRCUIT IS SHOWN. IN CASE TYPE 201 OR 202 IS USED SEE DWG. No. N-4060.

Figure 77
OF TYPE 5A ANNOUNCING SYSTEM

Little consideration was given to design and construction features considered necessary by the U. S. Navy to withstand naval service, and as protection against salt sea air, blast from gunfire, vibration, and shock. Japanese practice appears to have been to avoid subjecting the equipment to the above conditions insofar as possible and to repair and replace equipment when damage occurred.

The Japanese equipment was made less accessible than U. S. Navy equipment for servicing. Servicing an amplifier in the subject equipment normally would mean removal from the rack. There was a complete lack of hinged tube cradles, panel mounted transformers, etc.

The Japanese equipment lacked flexibility. There was no provision for the operation of both the general defense and the engineer's system on either of the two amplifiers, in the event of failure of one. The amplifiers when removed from their respective rack had no power supply for use while servicing. Little attempt was made at efficiently grouping reproducers for maximum utility.

Alarm signals normally were not transmitted by the announcing system although the attention signal was keyed in some instances for this purpose.

No provision was made for volume limiting or volume expansion.

The time delay circuit in the power control relay panel was suggested as a possible replacement for time delay relays.

The components of this system are shown in block diagram Figure 77. The system is comprised of the following major components:

(1) Three control boxes (transmitter control stations) for the general defense system located approximately as follows: flag bridge, quarter deck-forward and quarter deck-aft.

(2) Two control boxes for the damage control system located in the damage control offices.

(3) One control box for the engineer's system located in the control engine room (Main Engine Control).

(4) Five monitors, each comprising--

(a) One selector switch

(b) One reproducer

These units are located at all control boxes except one of the two quarter deck boxes.

(1) One amplifier for general defense and damage control system.

(2) One amplifier for engineer's system.

(3) Two hundred reproducers (maximum) of the following types--

(a) Magnetic, Type 2 (two sizes)

(b) Permanent magnet dynamic, Type 3 (cone)

(c) Permanent magnet horn, Type 4 (diaphragm)

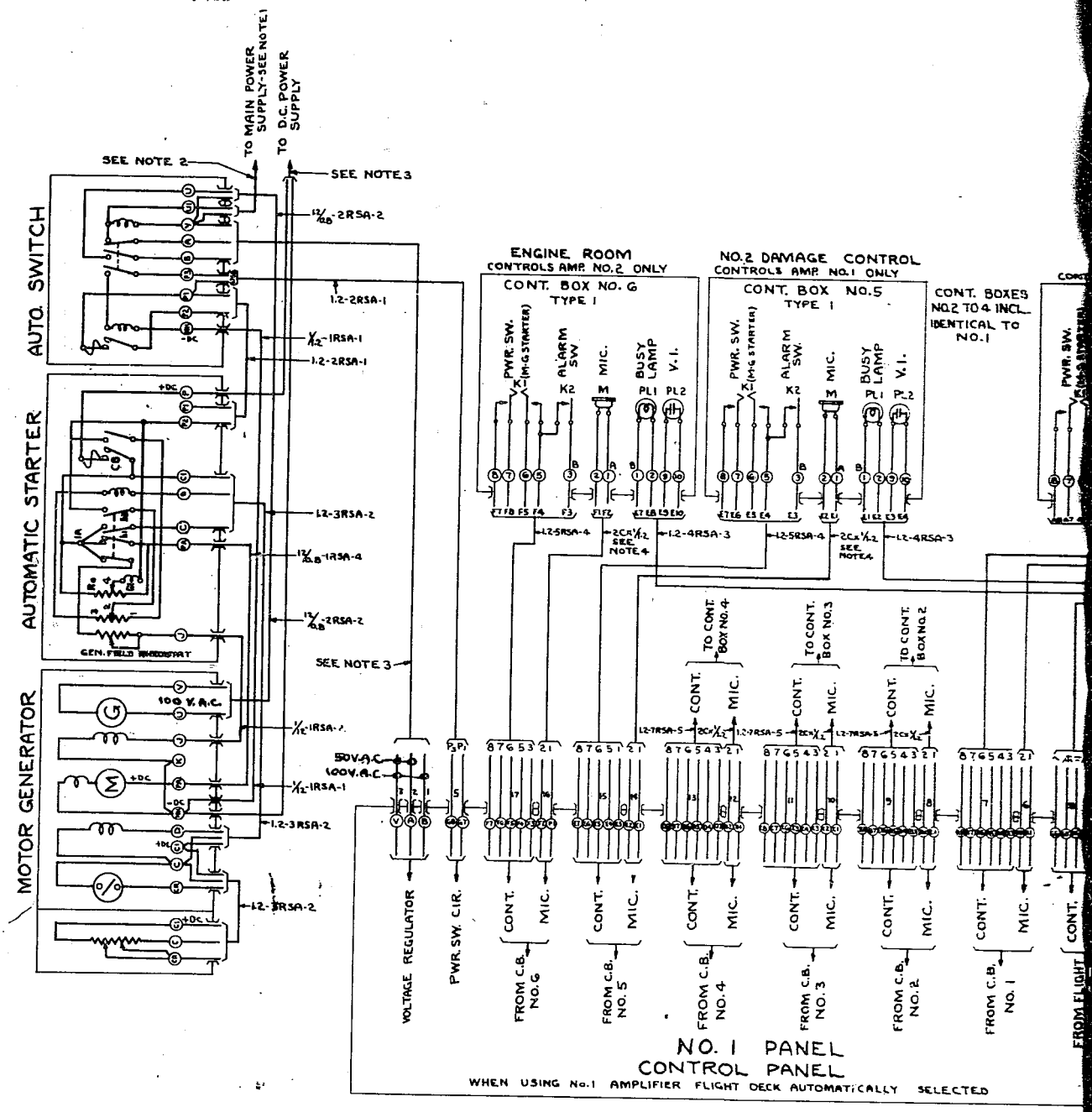

TABLE No. 1

LENGTH OF CABLE	SIZE OF CABLE	
MAIN PWR. INSTALL'N.	50 VOLT	
25 METERS APP.	13/.8-2RSA-3	
50 " "	30/.8-2RSA-4	
100 " "	19/.1-2RSA-5	
150 " "		

TABLE No. 2

LENGTH OF CABLE		SIZE OF CABLE		
A.C. INSTALLATION	D.C. INSTALLATION	50 VOLT	100 VOLT	220 VOLT
25 METERS APP.	25 METERS APP.	19/.8-1RSA-5	7/.8-1RSA-3	1/C-1RSA-2
50 " "	50 " "	30/.8-1RSA-6	13/.8-1RSA-4	7/.8-1RSA-3
100 " "	100 " "	57/.8-1RSA-7	19/.8-1RSA-5	12/.8-1RSA-4
150 " "	150 " "	38/.8-1RSA-8	30/.8-1RSA-6	13/.8-1RSA-4

Figur
BLOCK DIAGRAM OF TYPE

CONT. BOX No. 1-FLAG BRIDGE
" " " 2-QTR. DECK (FWD)
" " " 3-No. 1 DAMAGE CONTROL OFF. — HMON. SPK. FOR No. 2 & 4 STATION
" " " 4-QTR. DECK (AFT)
" " " 5-No. 2 DAMAGE CONTROL
" " " 6-ENGINE ROOM

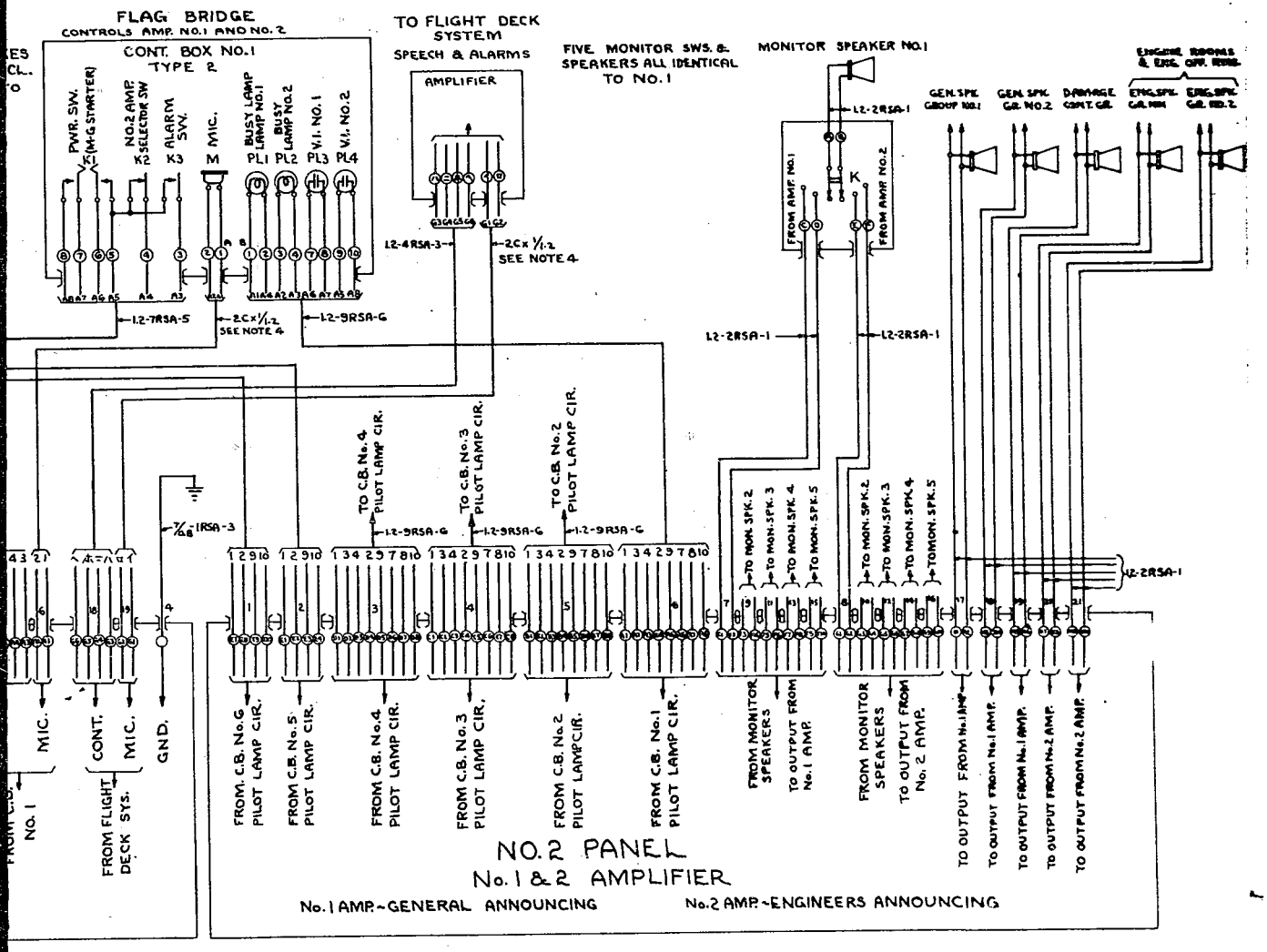

NOTES:

1. WIRE AS SHOWN FOR 50 VOLT A.C. MAIN POWER SUPPLY. IF 100 VOLT A.C. IS USED AUTO. SWITCH TERMINALS A & B ARE TO BE SHORTED AND WIRE A-A OMITED.
2. FOR CABLE SIZE SEE TABLE No. 1.
3. FOR CABLE SIZE SEE TABLE No. 2.
4. MICROPHONE LEADS TO BE RUN IN LEAD SHIELDED CABLE. CABLES SHALL NOT BE PLACED NEAR OR IN PARALLEL WITH OUTPUT CABLES OR POWER CABLES.
5. GENERAL ANN. AND DAMAGE CONTROL ARE LIMITED TO 30 SPEAKERS PER GROUP. ENGINEERS ANN. LIMITED TO 50 SPEAKERS PER GROUP. MAX. 200 SPEAKERS USED PER VESSEL.
6. CONNECTING DIAGRAM FOR TYPE 204 & 204A FLIGHT DECK CIRCUIT IS SHOWN. IN CASE TYPE 201 OR 202 IS USED SEE DWG. No. N-4060.

Figure 77
M OF TYPE 5A ANNOUNCING SYSTEM

(4) One emergency power supply comprising--

(a) One automatic switch

(b) One automatic starter

(c) One DC-AC motor generator

Control Box - The three types of control boxes for the three systems are of the same fundamental design and differ primarily in the number and arrangement of controls on the front panel. The unit does not appear to have any particularly advantageous features. The "talk switch" is a push button operated by the door. There are three obvious disadvantages to the design, mainly--

(1) Lack of adjustment on microphone for height of talker.

(2) Lack of adequate volume indicator--a single neon lamp connected across the output of each of the main amplifiers is the sole means of volume indicator.

(3) The microphone is exposed to all ambient noise as soon as the door of the transmitter station is opened.

(4) The microphone is of non-blastproof construction.

The microphone used in the control box is identical to a design manufactured by the Western Electric Company a number of years ago for commercial application. The output impedance of the microphone is approximately 34 ohms. Figure 78 is the frequency response of the microphone. Figure 79 is the assembly drawing of a typical control box.

Monitor - The monitor equipment provided a means of actually listening to the output of the two main amplifiers from all but one transmitter station. There are no new features of development or design in the components involved. The application of the monitor is new on announcing equipment, and has some merit.

Amplifier - The assembly drawing of the latest type of AC operator amplifier is given in Figure 80.

The cabinet is basically an angle iron frame (approximately one inch angle iron) welded at the corners and strengthened with gusset plates.

The amplifier units (voltage and power amplifiers) are built up on flat metal plates stiffened at the edge by an angle iron, which rims the plate, and which combined, form the chassis. A terminal board terminating all wiring for coils amplifier component is mounted on the front edge of the chassis. Vacuum tubes are mounted in a vertical position, in cushioned sockets, along the front of each chassis. Transformer, resistor and reactor components are mounted generally behind a heat shield which separates the vacuum tubes from the near half of the chassis.

The amplifier chassis rests on angle iron supports fixed to the sides of the main cabinet. The chassis could be removed by first disconnecting all leads from the unit terminal board.

The filament and plate power supplies for the various amplifiers are units separate from the amplifiers and are not readily removable from the amplifier rack for servicing or replacement.

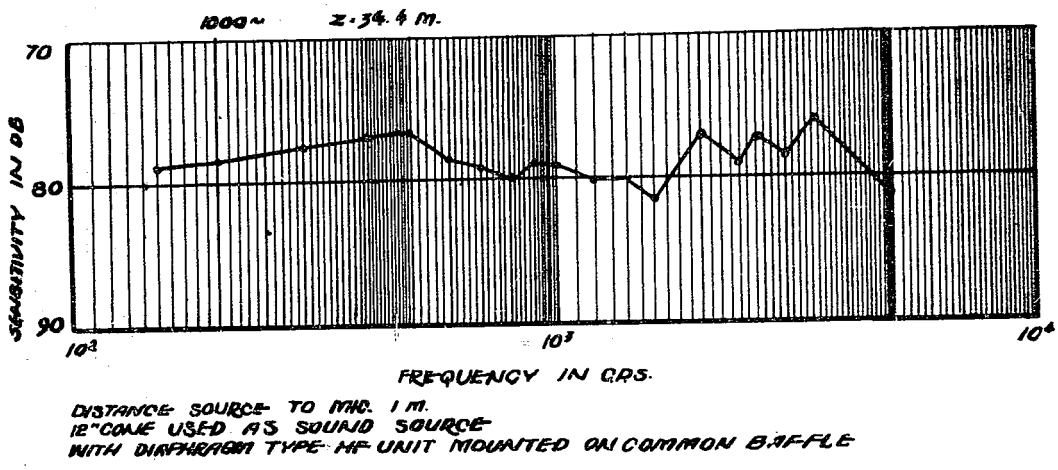

Figure 78
FREQUENCY CHARACTERISTIC OF MICROPHONE
FOR BATTLE ANNOUNCING SYSTEM

0 db = 1 volt/bar

Table IX
TUBE DATA
SPECIAL SUMITOMO TUBES USED IN GENERAL ANNOUNCING EQUIPMENT

NAME	SIZE (mm) Length	Dia.	FILAMENT Material	Voltage	Curr.	PLATE VOLTAGE	3rd GRID VOLTAGE	2nd GRID VOLT	PLATE DISS.	S.G. DISS.	MUTUAL COND.	MU	SCREEN CURR.	PLT VOLT	3rd GRID VOLT	2nd GRID VOLT	1st GRID VOLT	INPUT POWER	OUTPUT POWER	REFERENCE
TB-508-C	17.0	5.2	T	10.0V	3.25A	1.000V			75 W		3.800	12		1.000V			-100V	150W	100V	U7-211A
MC-539-D	19.8	6.9	T	7.5V	4.5A	1.250V	0V	250V	75 W	15W	3.300		5	1.250V	0V	250V	-100V	180W	120W	

NAME	FILAMENT VOLT	CURR.	MAX. PLT. VOLT IN A.C. TO 1 PLT	MAX. D.C. OUTPUT (mA)	PEAK INVERSE VOLTAGE	MAX. PEAK PLT. CURR. (mA)
HX-83	5.0V	3.0A	500V	250mA	1400	800(mA)

NAME	SIZE (mm) Length	Dia.	FILAMENT Voltage	Curr.	HEATING METHOD	PRE-HEAT	PEAK CURR. (AMP)	MEAN. CURR. (AMP)	PEAK INVERSED	MAX. VOLT DROP IN TUBE	ROOM TEMP. (°C)	COOLING
QC-709-C	15.8	5.5	2.5V	5A	DIRECT	30 sec	0.8A	0.3A	5.000V	20V	5-40	NATURAL

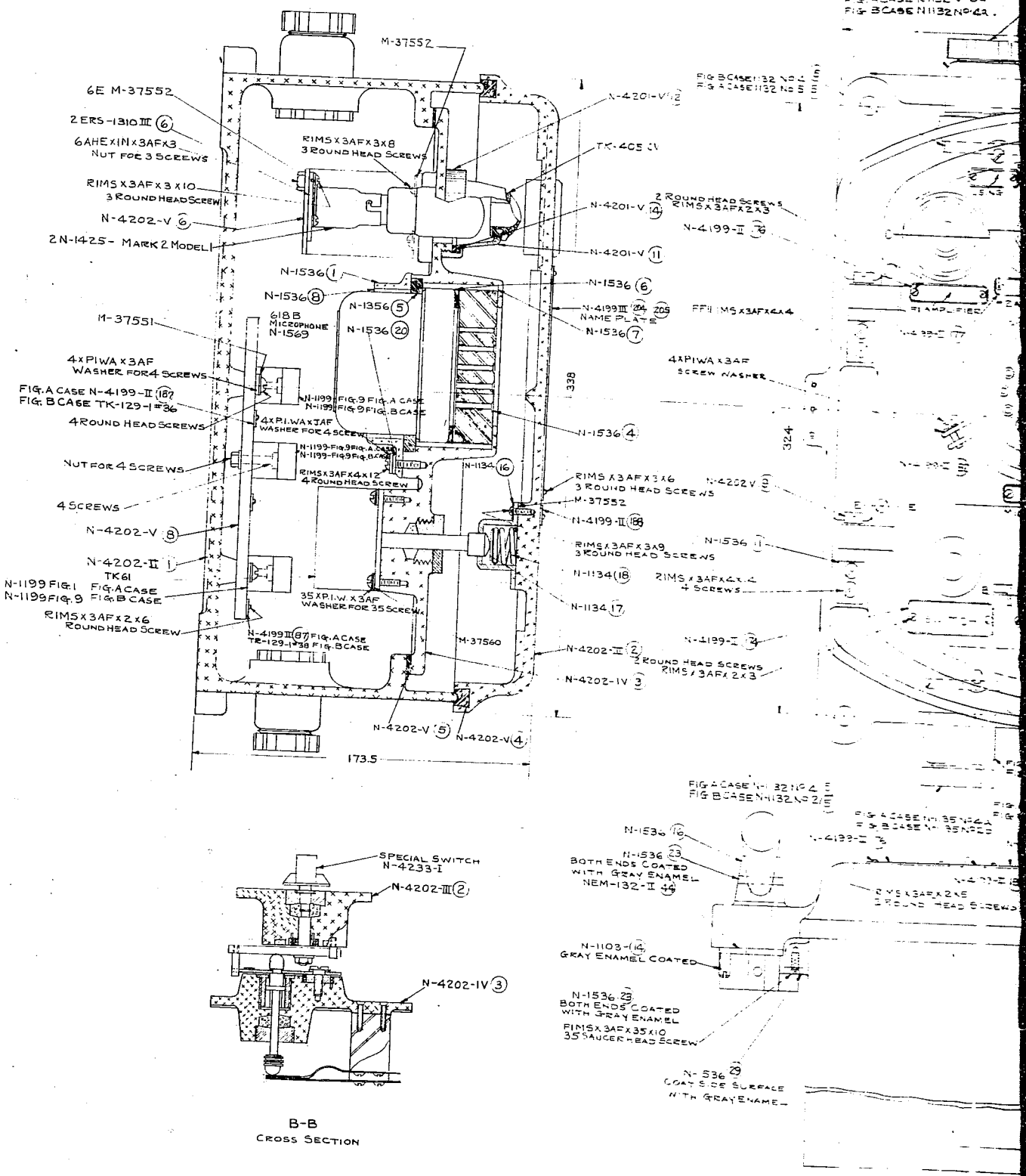

B-B
CROSS SECTION

Figur
ANNOUNCING SYST

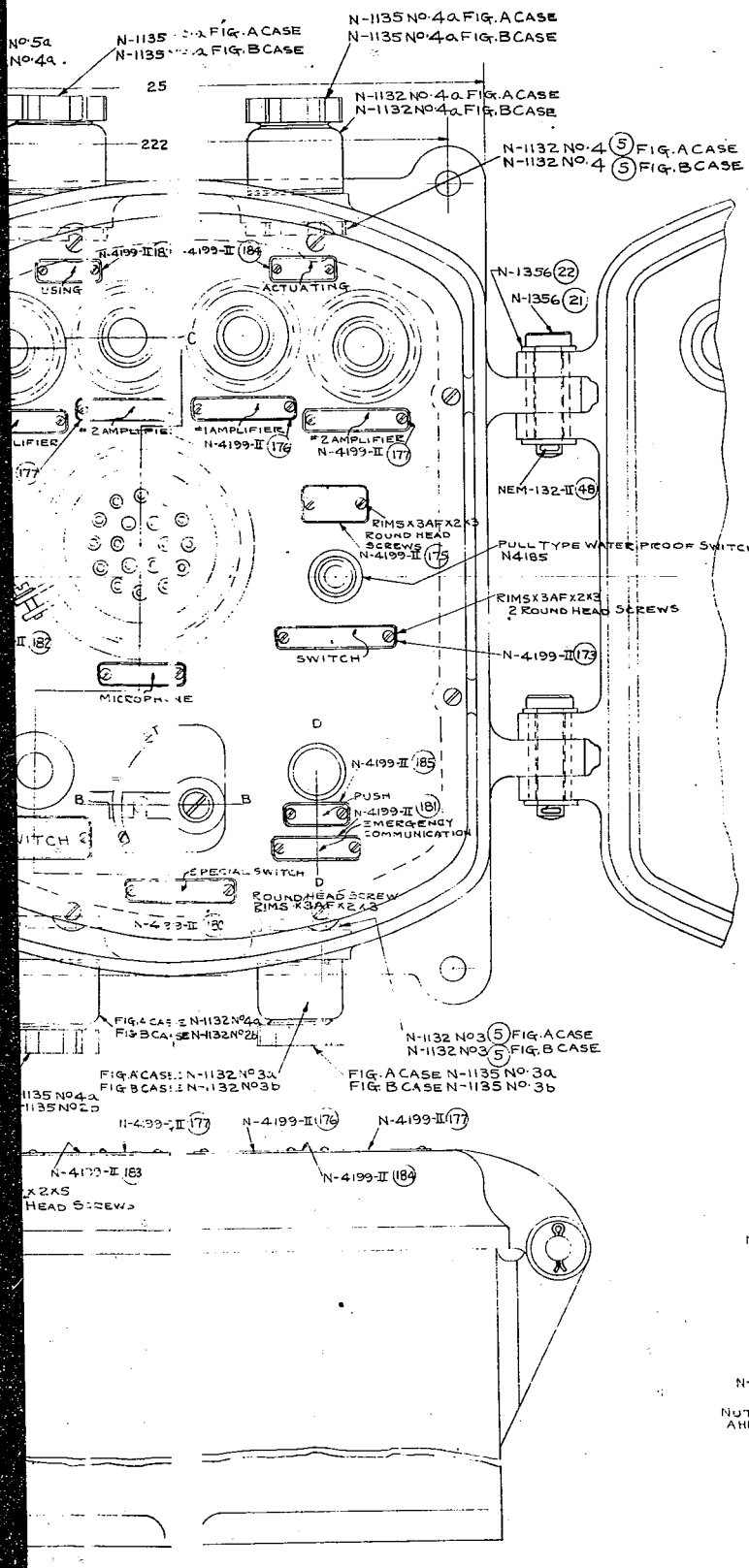

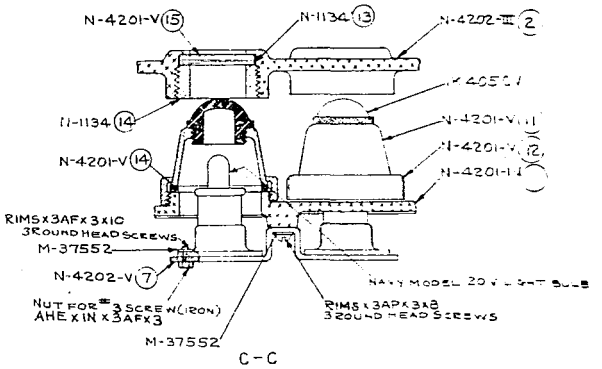

C-C
CROSS SECTION

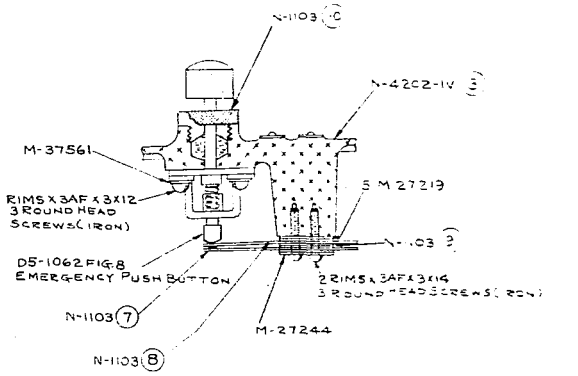

D-D
CROSS SECTION

NOTES: FIG. 'A' CASE INDICATES USE OF LOUD SPEAKER MARK 4.
FIG. 'B' CASE INDICATES USE OF LOUD SPEAKER MARK 5.

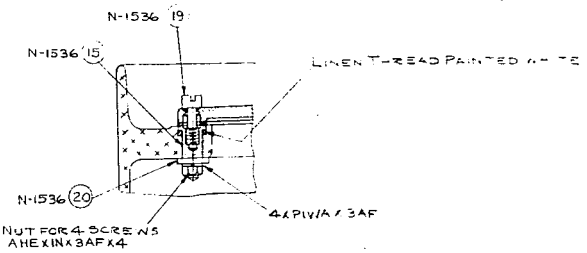

E-E
CROSS SECTION

Figure 79
NCING SYSTEM CONTROL BOX

RESTRICTED

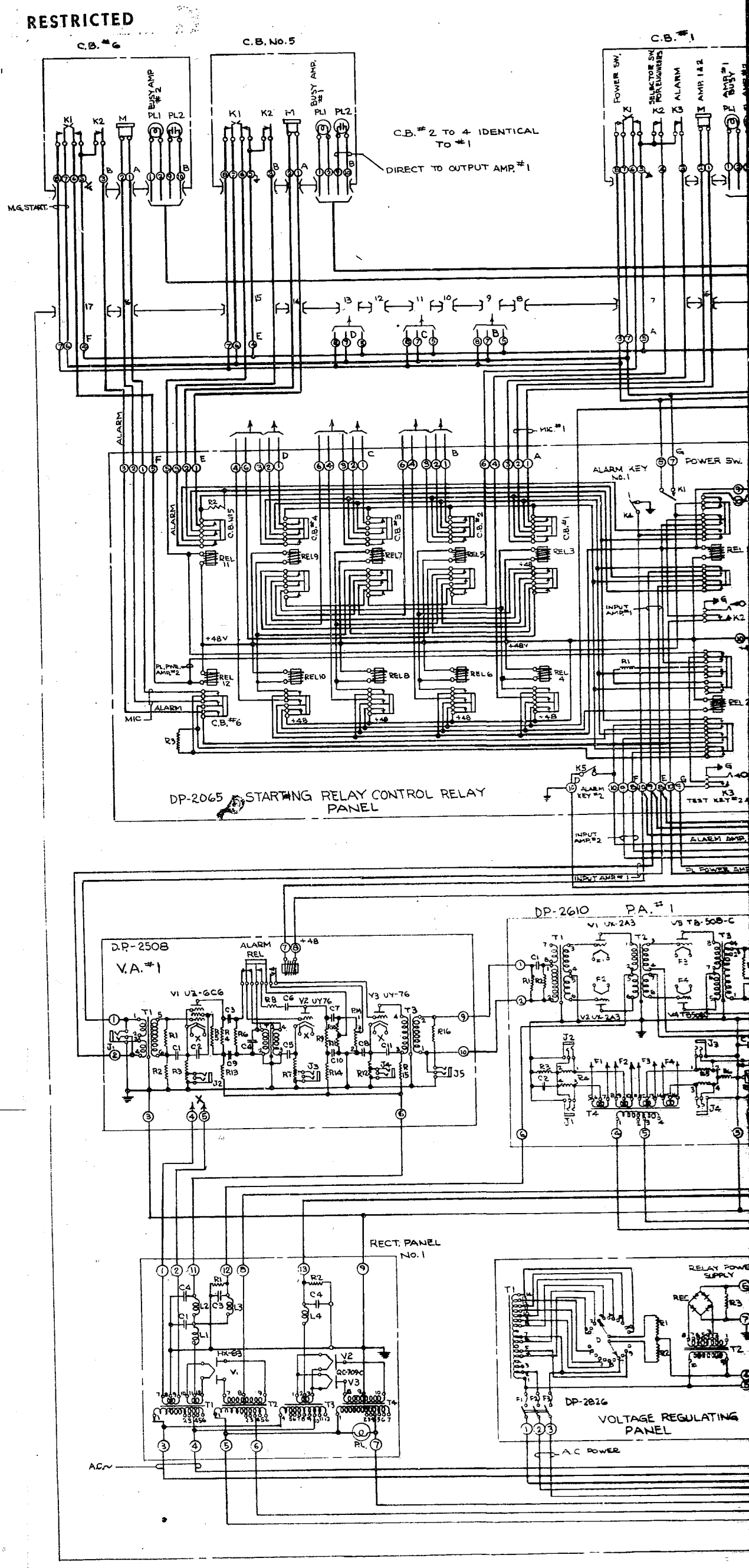
C.B. #6
C.B. No. 5
C.B. #1
BUSY AMP #2
BUSY AMP #1
K1
K2
M
PL1
PL2
POWER SW.
SELECTOR SW FOR ENGINEERS
ALARM
AMP. 1 & 2
C.B. #2 TO 4 IDENTICAL TO #1
DIRECT TO OUTPUT AMP. #1
M.G. START.
ALARM
MIC #1
ALARM KEY No. 1
POWER SW.
REL 11
REL 9
REL 7
REL 5
REL 3
REL 12
REL 10
REL 8
REL 6
REL 4
+48V
+48
INPUT AMP #1
INPUT AMP #2
ALARM KEY #2
TEST KEY #2
ALARM AMP.
MIC
C.B. #6
R3
R2
R1
K5
K4
K3
DP-2065 STARTING RELAY CONTROL RELAY PANEL
DP-2610 P.A. #1
D.P.-2508
V.A. #1
ALARM REL
+48
V1 UZ-6C6
V2 UY76
V3 UY-76
V1 UX-2A3
V2 UX-2A3
V3 TB-508-C
RECT. PANEL NO. 1
HX-83
QC-709C
DP-2826
VOLTAGE REGULATING PANEL
RELAY POWER SUPPLY
A.C. POWER
AC

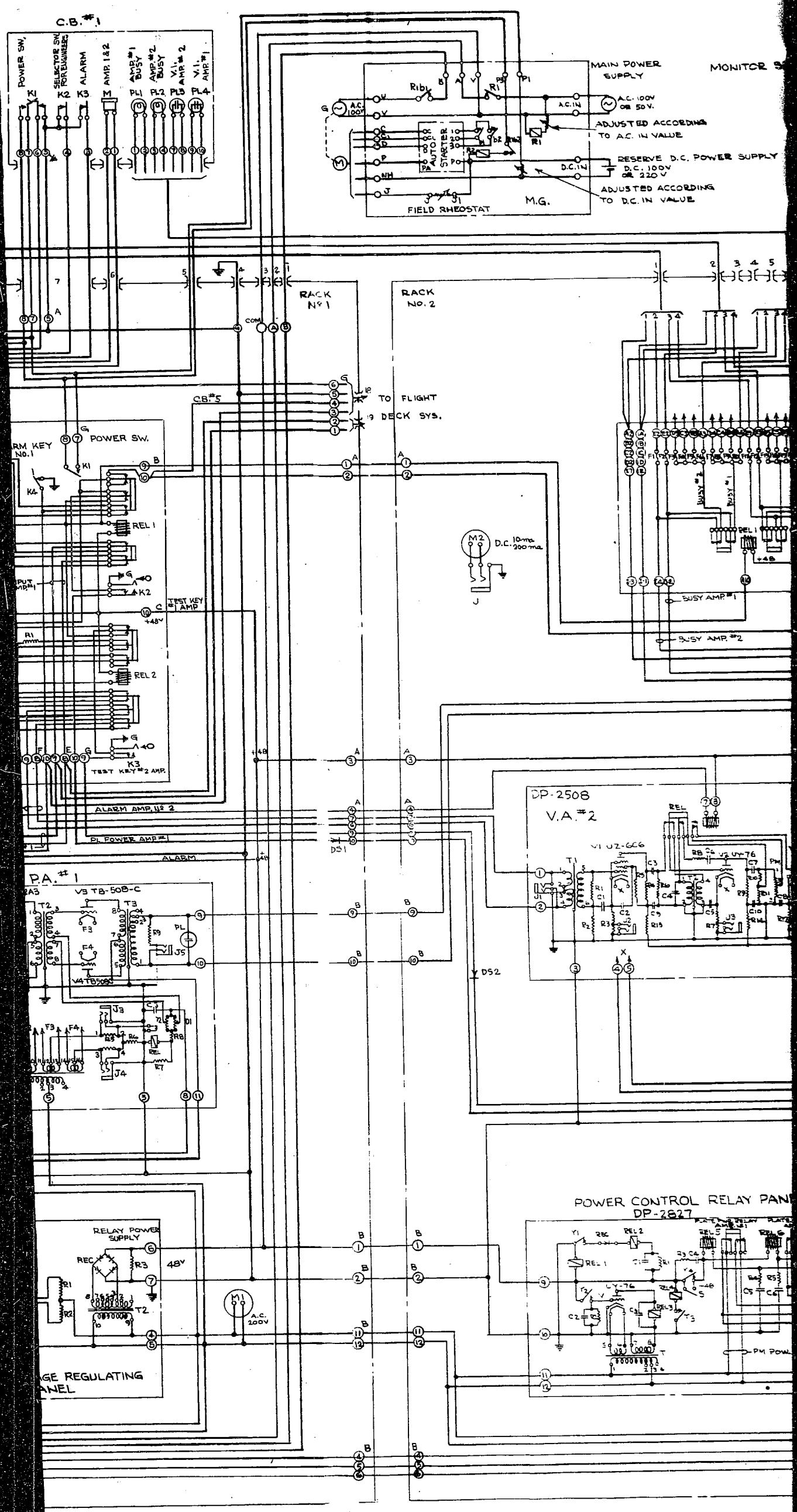

Figure 81
SCHEMATIC DIAGRAM - TYPE 5A AMPLIFIER

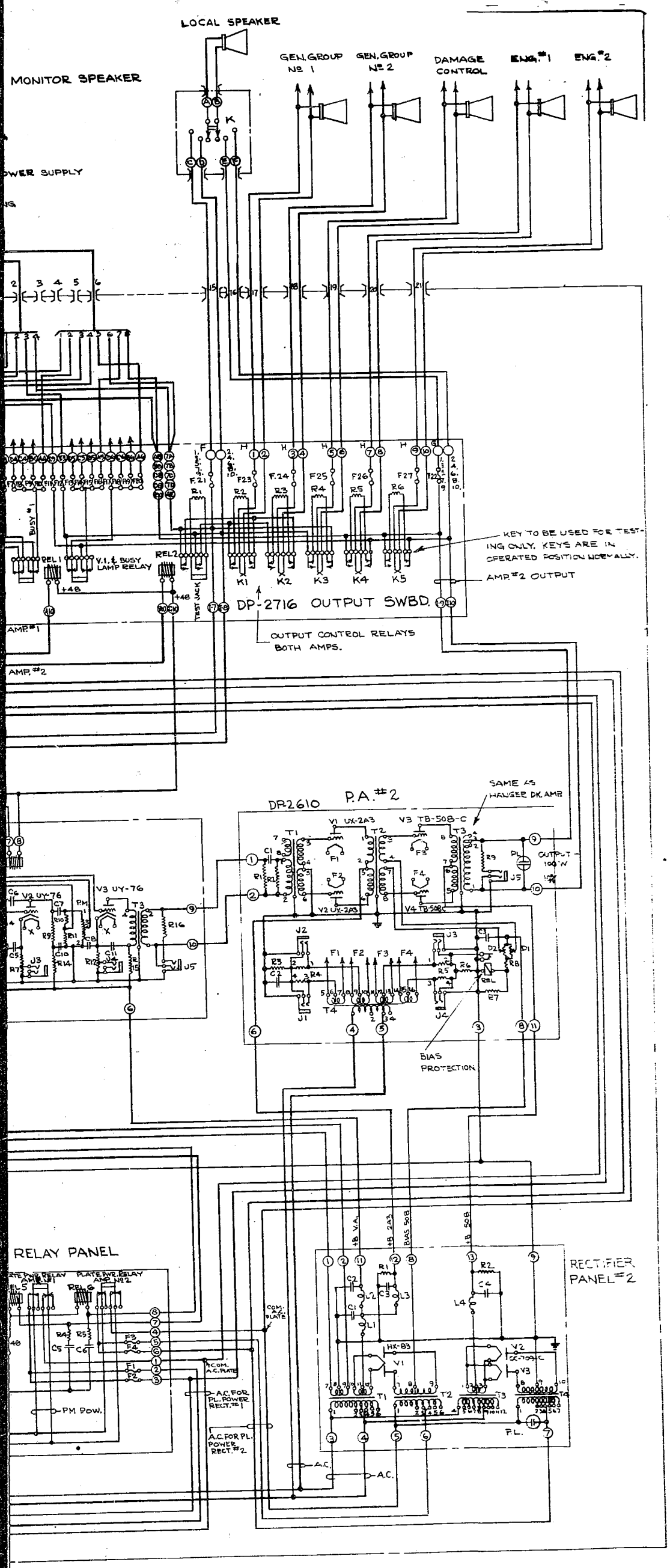
LOCAL SPEAKER
MONITOR SPEAKER
GEN. GROUP No 1
GEN. GROUP No 2
DAMAGE CONTROL
ENG. #1
ENG. #2
K
OWER SUPPLY
BUSY #1
REL 1
V.I. & BUSY LAMP RELAY
REL 2
+48
TEST JACK
K1
K2
K3
K4
K5
KEY TO BE USED FOR TESTING ONLY. KEYS ARE IN OPERATED POSITION NORMALLY.
AMP. #2 OUTPUT
DP-2716 OUTPUT SWBD.
OUTPUT CONTROL RELAYS BOTH AMPS.
AMP. #1
AMP. #2
DP-2610 P.A. #2
SAME AS HANGER DK. AMP.
V1 UX-2A3
V3 TB-508-C
V2 UX-2A3
V4 TB-508
OUTPUT 100 W
V2 UY-76
V3 UY-76
BIAS PROTECTION
RELAY PANEL
PLATE PWR. RELAY AMP. No 1
PLATE PWR. RELAY AMP. No 2
COM. A.C. PLATE
A.C. FOR PL. POWER RECT. #1
A.C. FOR PL. POWER RECT. #2
PM POW.
+B V.A.
+B 2A3
BIAS 508
+B 508
RECTIFIER PANEL #2
HX-83
V1
V2
V3
P.L.
A.C.

The low voltage, low power, transformer and reactor components are potted in cans with mounting feet provided. The high power, high voltage transformer and reactor units were not potted and appeared to have no special impregnation treatment. They are mounted on brackets which are bolted to the cores.

Many wire wound resistors are used. These are mounted on end by a bolt through the longitudinal axis of the resistor.

Telephone type (key) relays are used.

Meters were provided on the amplifier in generous quantities for the measurement of plate and bias voltages and plate current. The metering was accomplished by means of push buttons and selector switches.

The amplifier circuits are shown in Figure 81. They are conventional and generally devoid of modern features. The oscillator note or attention signal is obtained by converting the second stage of the voltage amplifier into an oscillatory circuit by means of the attention signal relay in the voltage amplifier. From Figure 81 it is evident that the relay also eliminates the volume control when the attention signal is in use.

The high voltage rectifiers in this equipment use mercury vapor rectifier tubes Type QC-709C per data contained in Table IX. Proper operation of these tubes requires that plate or anode voltage be applied not less than thirty seconds after application of filament voltage.

The time delay system used in the Type 5A equipment uses a vacuum tube time delay circuit in lieu of a time delay relay as is used in many U. S. Navy equipments. Referring to Figure 81, (Power Control Relay Panel DP-2827) the operation is as follows:

(Note: In referring to Figure 81 the reader must bear in mind that the Japanese method of drawing relays did not require that the relay contacts and coil be shown together. Hence, a particular relay coil must be associated with contacts marked with the same coil number preceded by the symbol "V".)

(1) From an overall circuit description which is to follow later in the report, it will be obvious that the main AC 100 volt, 60 cycle power source is connected to switch "S" in the voltage regulating panel DP-2826. Closing switch "S" applies AC power to the copper oxide rectifier, in the same panel, which supplies 48 volts DC for the operation of the equipment relay system.

(2) Voltage from rectifier closes Rel #1 in power control relay panel.

(3) Rel #2 is closed as DC passes through the copper oxide rectifier (in power control relay panel) and as a result of the charging current of C1 (Rel #1 is a very high resistance).

(4) C2 is then charged to the 48 volt potential of the relay source.

(5) Tube UY-76 is biased beyond cut-off by the UU terminal voltage of C1.

(6) As C1 becomes charged to 48 volts, Rel #2 releases since the charging current ceases.

(7) As Rel #2 opens C2 begins to discharge through R2 (time of discharge calcultated for 30 seconds), the bias on UY-76 decreases and the tube begins to draw plate current.

(8) Rel #3 operates from the tube plate current.

(9) Rel #4 closes thereby placing the relay power supply for Rel #5 and 6 (plate rectifier power) in the "standby" condition.

The time delay circuit described above has a recycling feature which functions to place the announcing equipment back on the line immediately after the restoration of power, in case of a power failure, provided power is not off the line for more than five seconds. This operation proceeds as follows:

(1) In case of failure of AC power supply, Rel #1, 3, 4, 5 and 6 reclose immediately.

(2) C1 begins to discharge through R1. (The rectifier prevents the discharge of C1 through the DC source circuit.)

(3) If AC power is restored within five seconds, C1 will not have discharged sufficiently to permit its charging current to operate Rel #2.

(4) As a result, C2 is not connected across the 48 volt line and does not charge.

(5) Plate current flows in UY-76 and Rel #3 and 4 function as before.

(Note: If the main power supply is off for a period longer than five seconds, C1 discharges to the point where its charging current will operate Rel #2 when power is restored and the initial operation of the time delay cycle is repeated.)

The above described amplifier, which is of the most recent Japanese design, appears to have no inherent advantages over amplifiers now in use in the U. S. Navy. Time delay relays have been a constant source of trouble. Although the Japanese vacuum tube type time delay circuit utilizes numerous parts, it may require less adjustment and be more reliable than the mechanical type of time delay currently in use by the U. S. Navy.

The Type 5A amplifier has the following major disadvantages:

(1) It is difficult to service.

(2) It is larger than an equivalent U. S. Navy system.

(3) It includes no provision for volume compression.

(4) No provision is made for alarm signals other than attention signals.

(5) It requires DC bias on power tubes plus bias protection. A typical frequency response characteristic for a Japanese announcing amplifier is shown in Figure 82. Typical load curves are shown in Figure 83. Curves showing distortion versus fre-

quency for a given output were not available. The variations in frequency response are controlled by means of a filter within the amplifier.

The weight of a high power amplifier was estimated by the Japanese to be approximately 4.5 kilograms/watt.

No tests were made to determine resistance to shock and vibration hence no data on test performance was available. Representatives of the Navy Technical Department advised, however, that the amplifier described above has operated satisfactorily under all conditions of shipboard service.

Magnetic Reproducer - Model Z - The magnetic reproducer was made in two sizes (Figure 84 and Figure 85) both utilizing the same permanent magnet diaphragm type of magnetic speaker mechanism Figure 91. This mechanism is comparable, if not identical to, a very old Western Electric Company design. The mechanism is mounted in the junction box (Figure 87) and connected to the principal horn structure by a tapered tube (Figure 86).

The frequency response, sensitivity and impedance characteristics of the reproducer are shown in Figures 88, 89, and 90 respectively.

For quick comparison with U. S. Navy specifications, the magnetic Type 2 reproducer produce a pressure of approximately 22 bars on the axis at a distance of 10 feet at a frequency 750-1250 cycles. The frequency range of the reproducer obviously is quite limited.

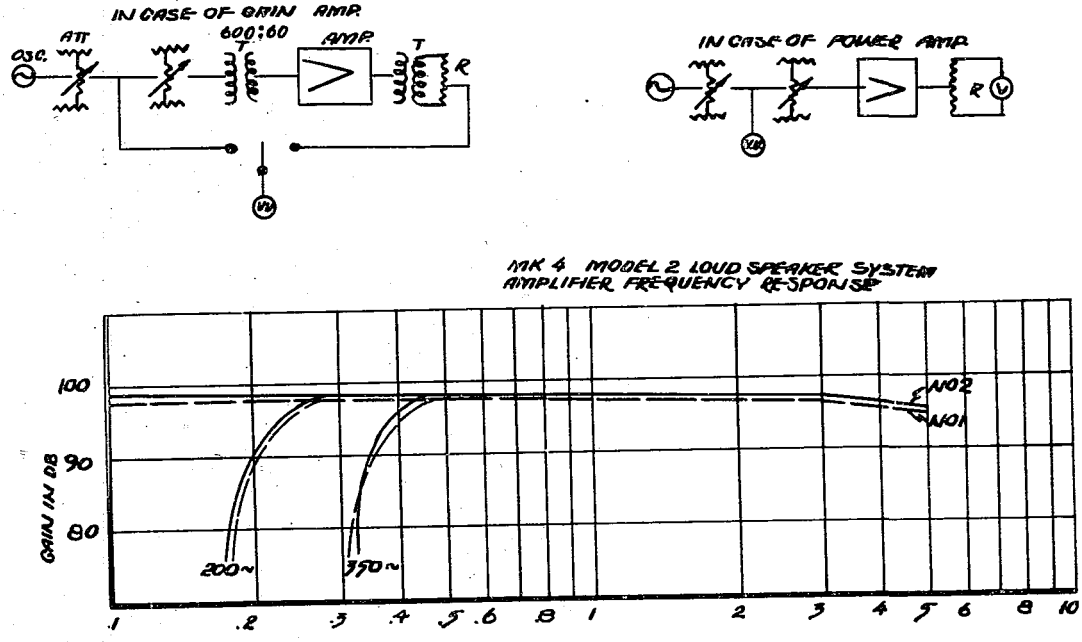

Figure 82
FREQUENCY RESPONSE – TYPE 5A AMPLIFIER

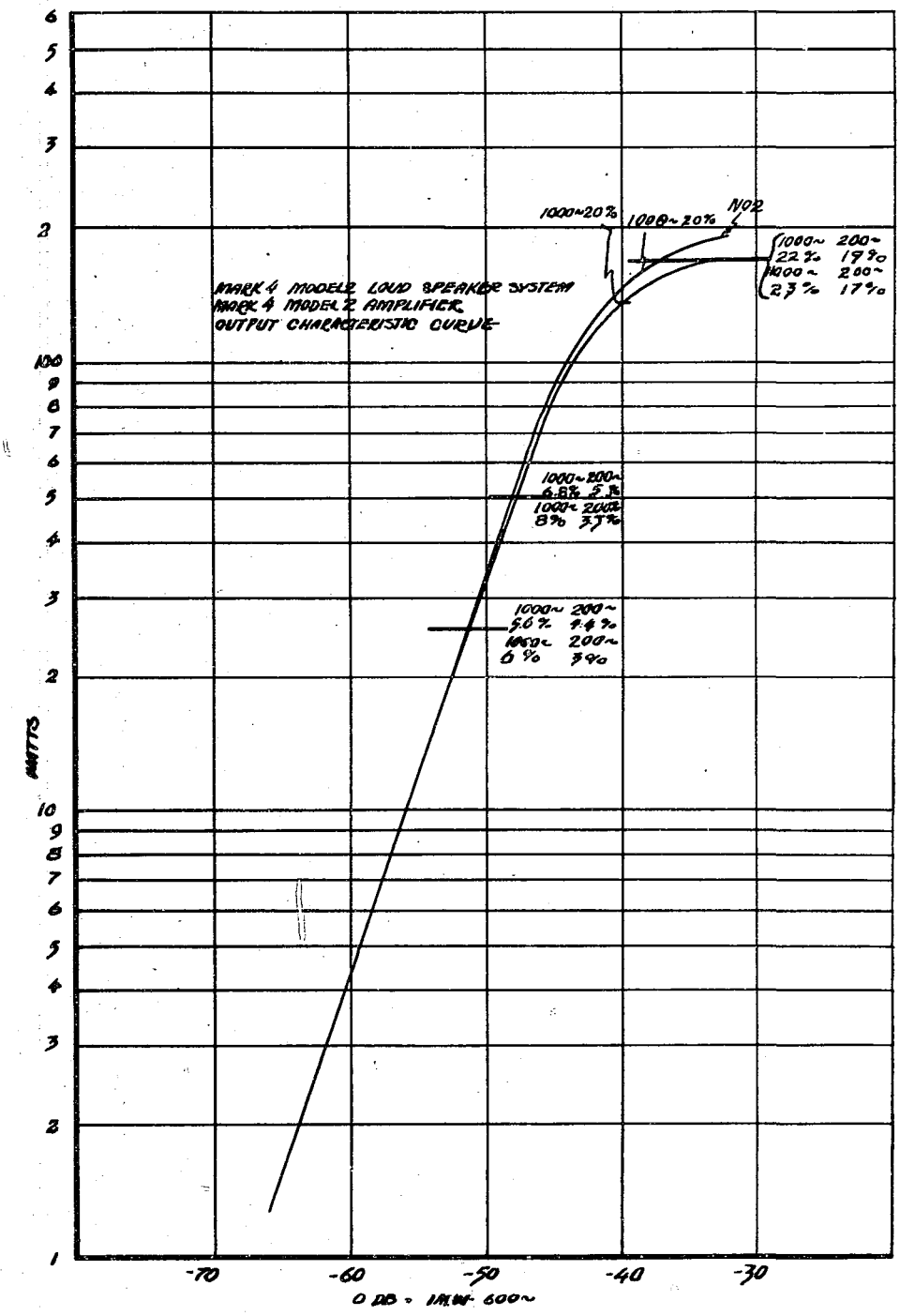

Figure 83
LOAD CURVE - TYPICAL ANNOUNCING AMPLIFIER

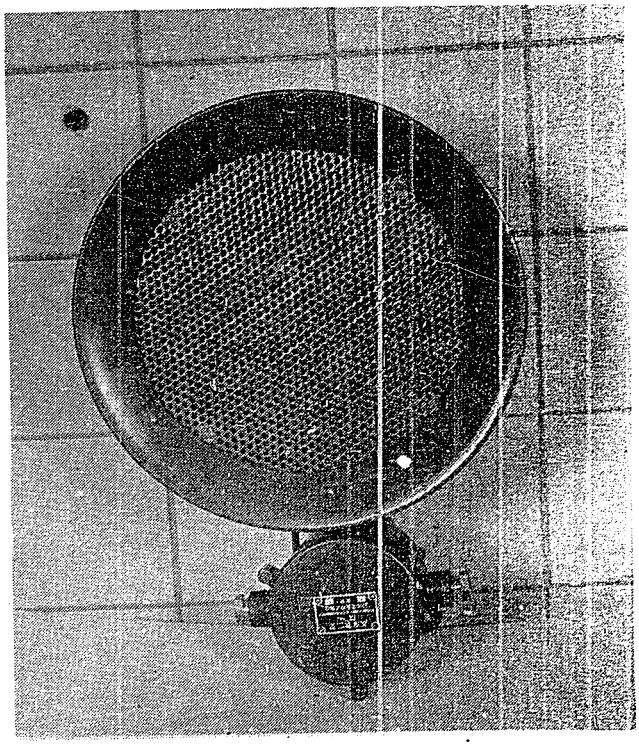

Figure 84
MAGNETIC REPRODUCER (LARGE)

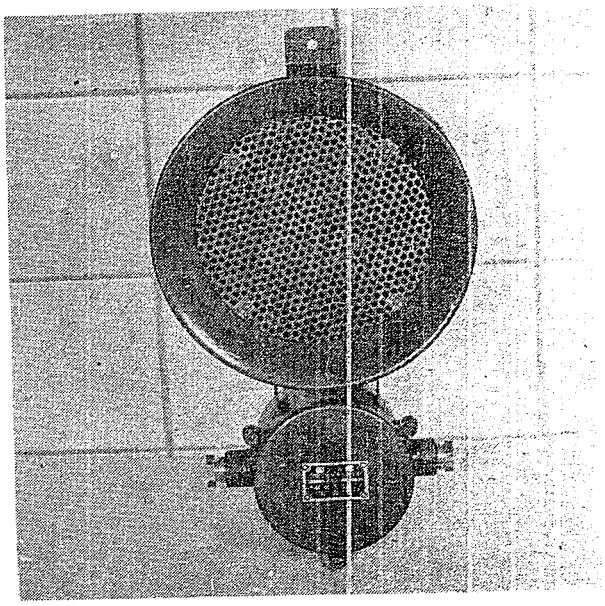

Figure 85
MAGNETIC REPRODUCER (SMALL)

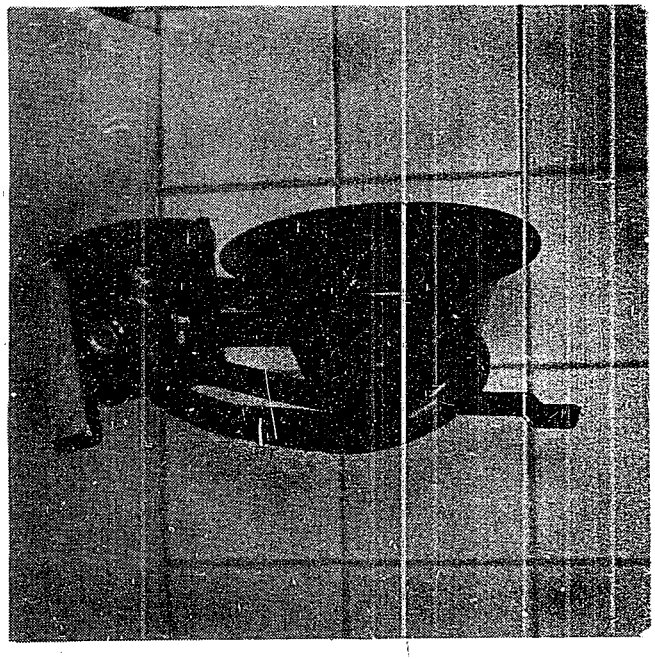

Figure 86
MAGNETIC REPRODUCER (SMALL) - SIDE VIEW

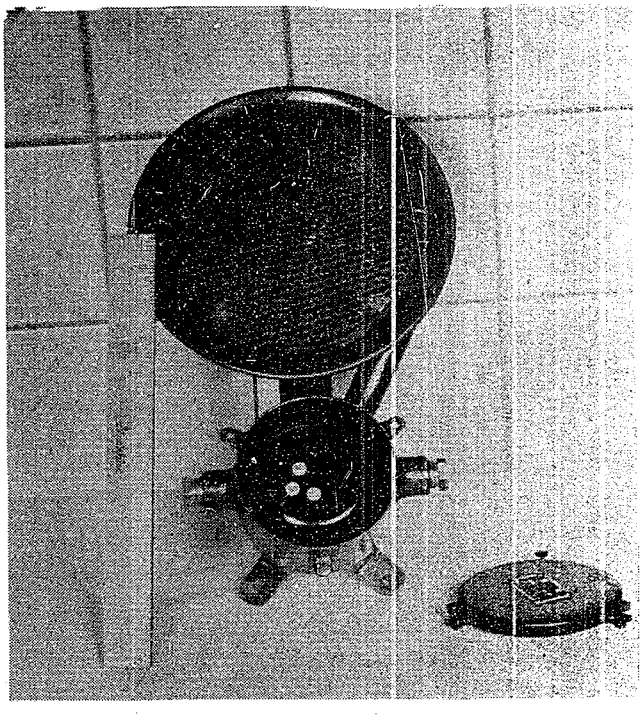

Figure 87
MAGNETIC REPRODUCER - JUNCTION BOX OPEN

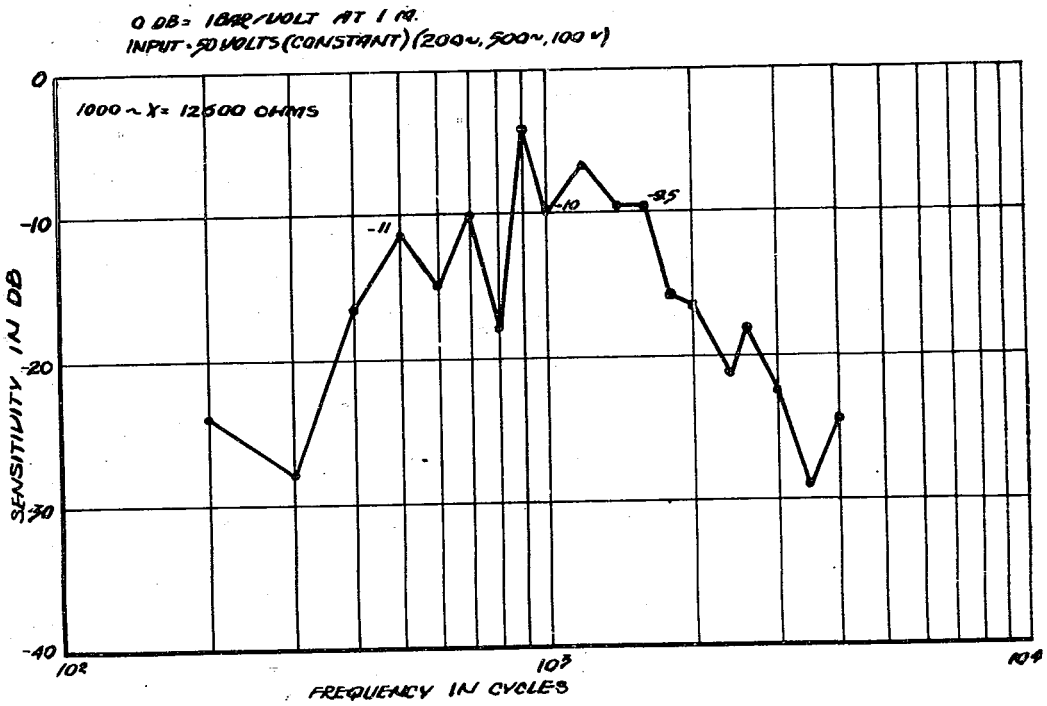

Figure 88
FREQUENCY RESPONSE - MAGNETIC REPRODUCER
(MODEL 2 MODIFICATION 1)

This type of reproducer was used extensively in all spaces except living spaces. When used in exposed locations the reproducers were installed on portable cords to permit moving to protected locations during the period when the ship's guns were being fired. There was no provision in the reproducer for blast protection.

The principal advantage of this type of reproducer is its efficiency over a limited frequency range.

Its main disadvantages are:

(1) Limited frequency range.

(2) Ragged frequency response.

(3) Low power handling capacity.

The principle of operation involved was not new.

Permanent Magnet Dynamic Type 3 Reproducer - The Type 3 reproducer is a permanent magnet, cone type unit of conventional commercial design mounted in a wood case. It appeared to have no feature which made it particularly suitable for naval service.

The Type 3 unit is intended primarily for use in living spaces in Japanese naval vessels.

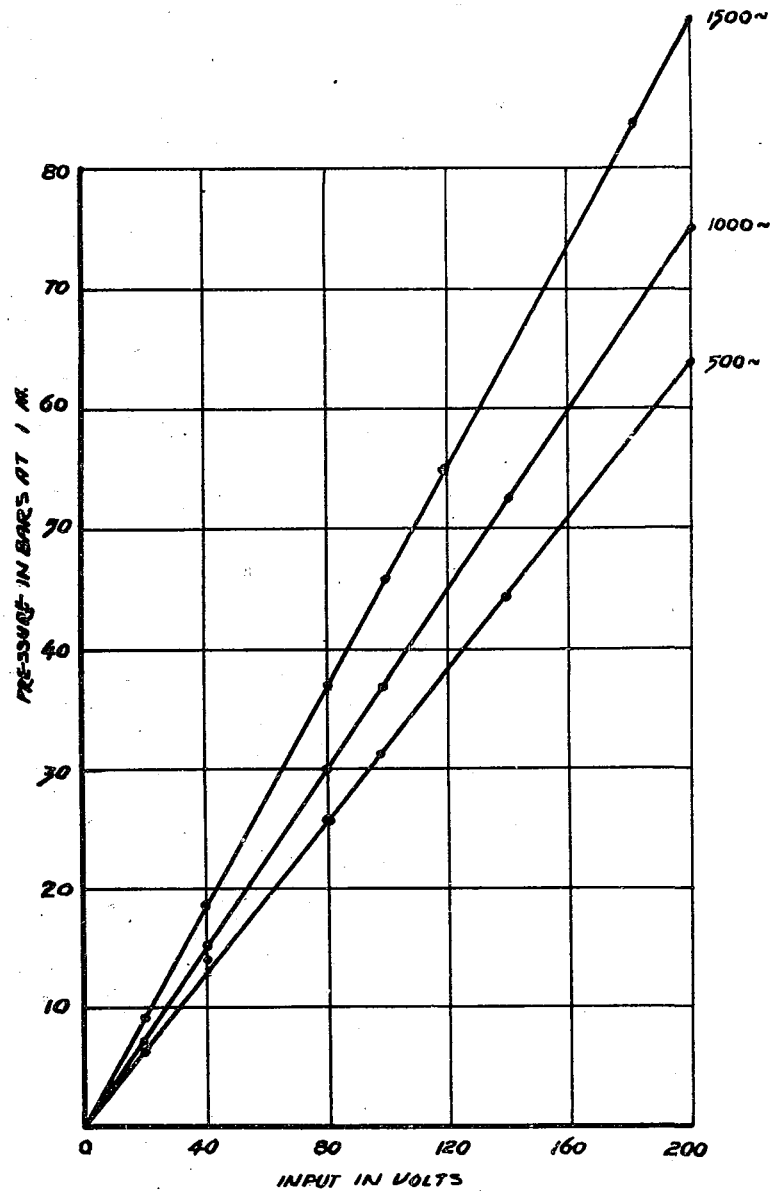

Figure 89
SENSITIVITY CURVE - MAGNETIC REPRODUCER

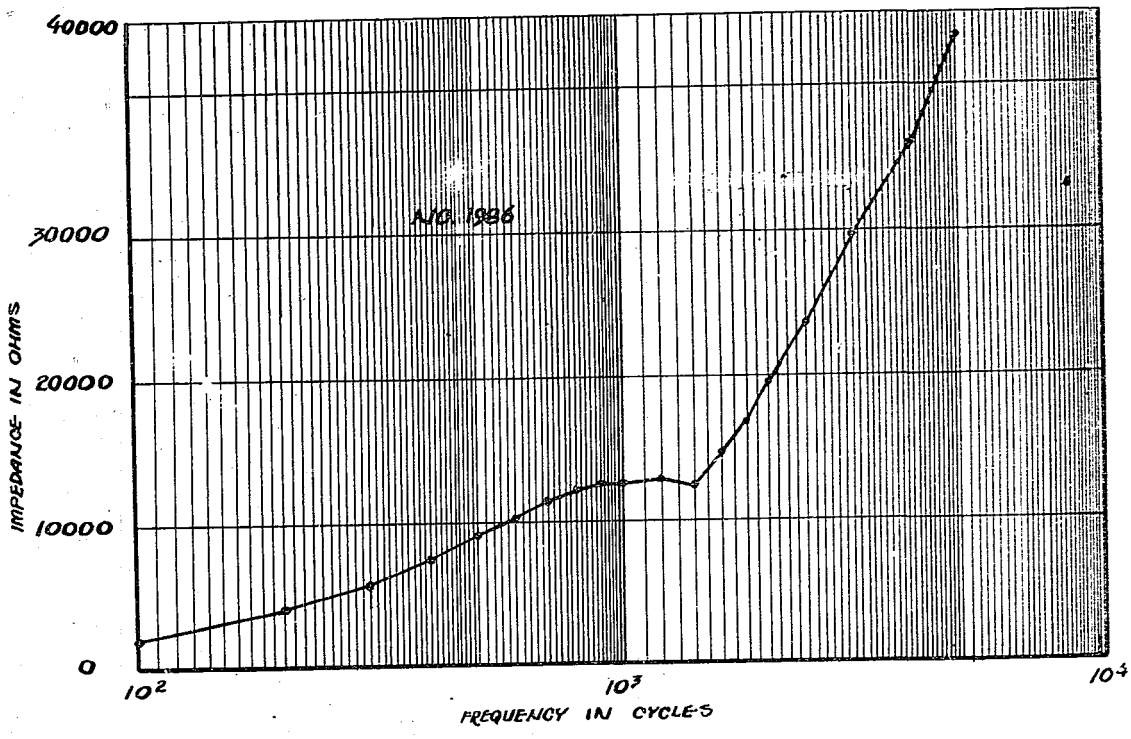

Figure 90
IMPEDANCE CHARACTERISTIC MAGNETIC REPRODUCER

It has no protection against blast from gunfire. The cone is of paper with no apparent moisture proofing treatment. The parts of the sample speaker examined were rusty, indicating no special protection against corrosion.

Figures 92, 93, and 94 are photographs of the Type 3 unit.

Figures 95, 96, and 97 are characteristic performance curves of the unit. Although the frequency range of the reproducer is reasonably good, the shape of the response curve is very poor for speech transmission due to the large dip in the range from 800 to 1300 cycles.

The sensitivity of the reproducer is such that it produces a pressure output of approximately 1.3 bars at ten feet on the axis with 2.5 watts input.

This reproducer appears to have no advantages over the conventional Type 5-1 reproducers used in the U. S. Navy--it is very much inferior in all respects.

Permanent Magnet Horn-Type 4 Reproducer - The Type 4 reproducer, according to information supplied by the Japanese manufacturer (Nippon Electric Company, Ltd.) is a copy of a unit manufactured by an American Company (Racon).

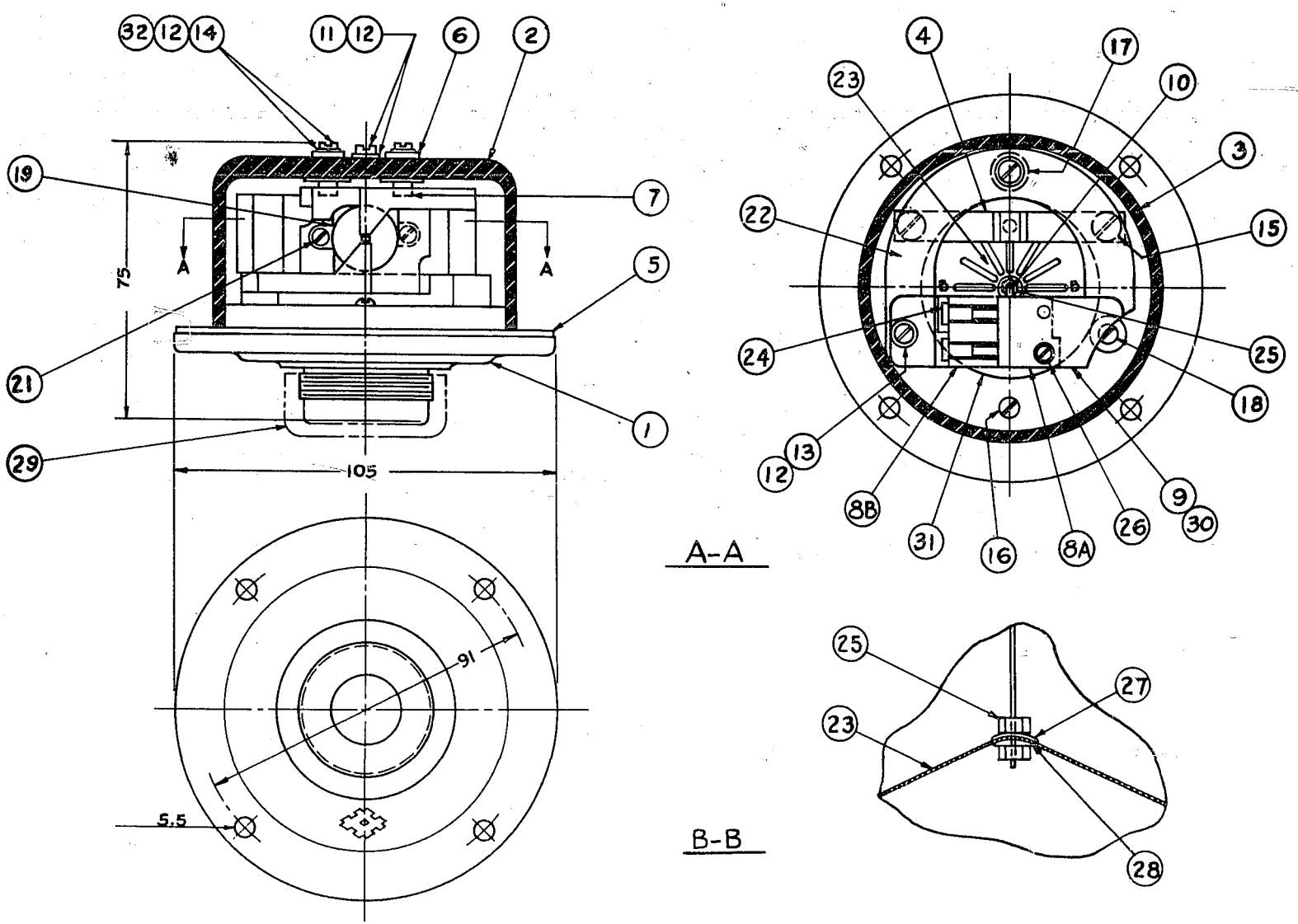

Figure 91
MECHANISM FOR MAGNETIC REPRODUCERS

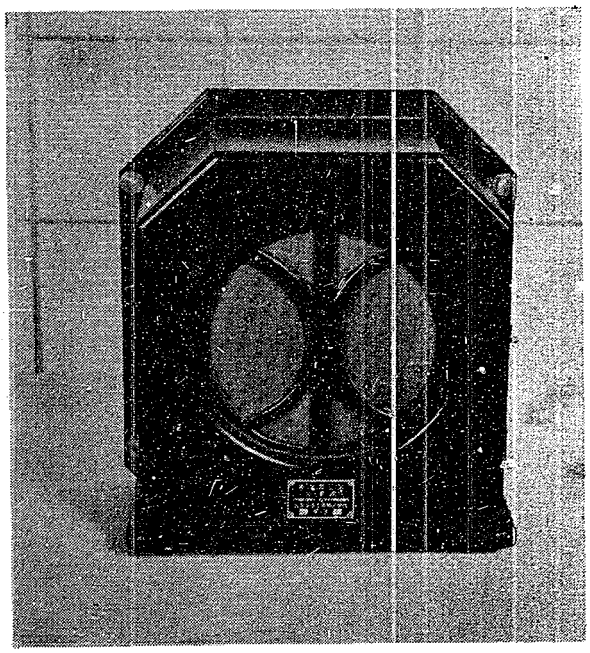

Figure 92
PERMANENT MAGNET, DYNAMIC REPRODUCER (TYPE 3)

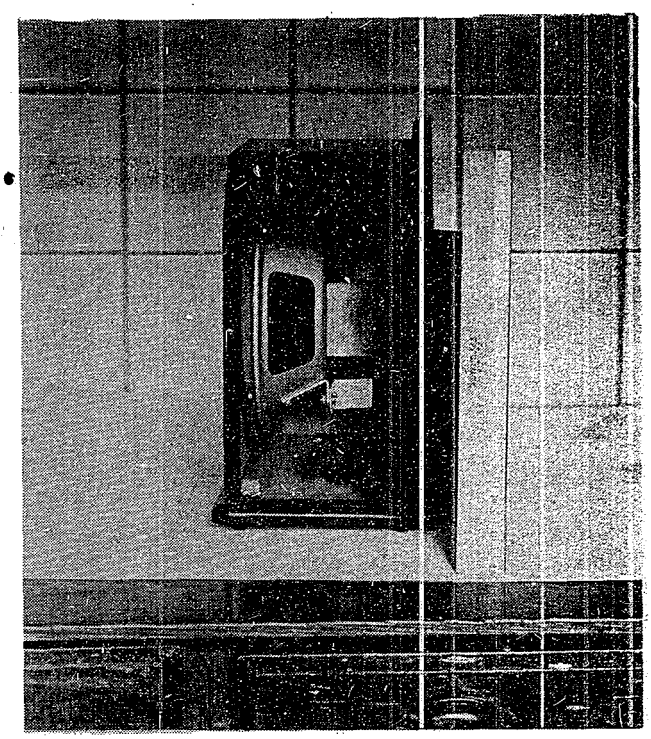

Figure 93
PERMANENT MAGNET, DYNAMIC REPRODUCER (TYPE 3) - SIDE VIEW

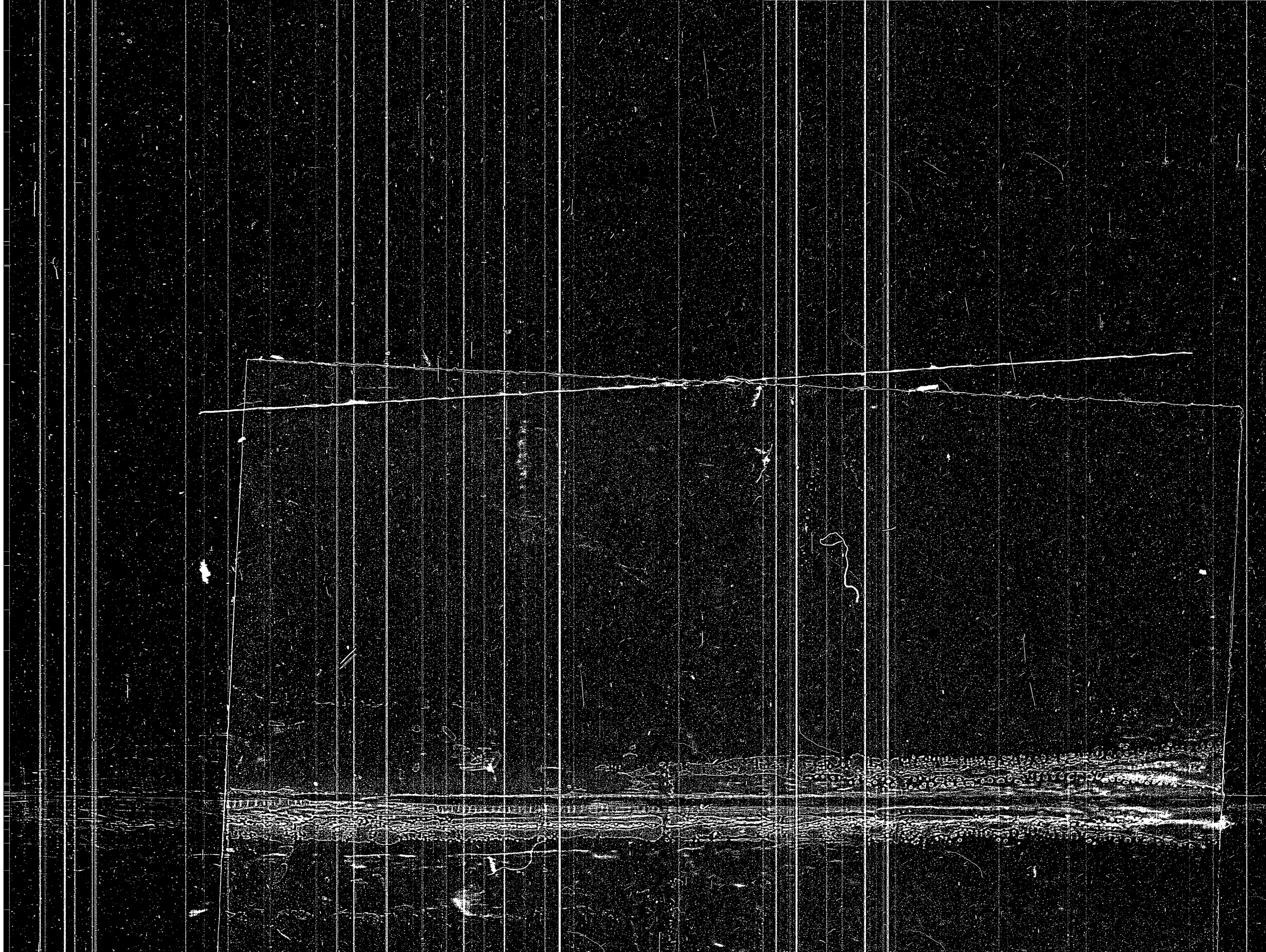

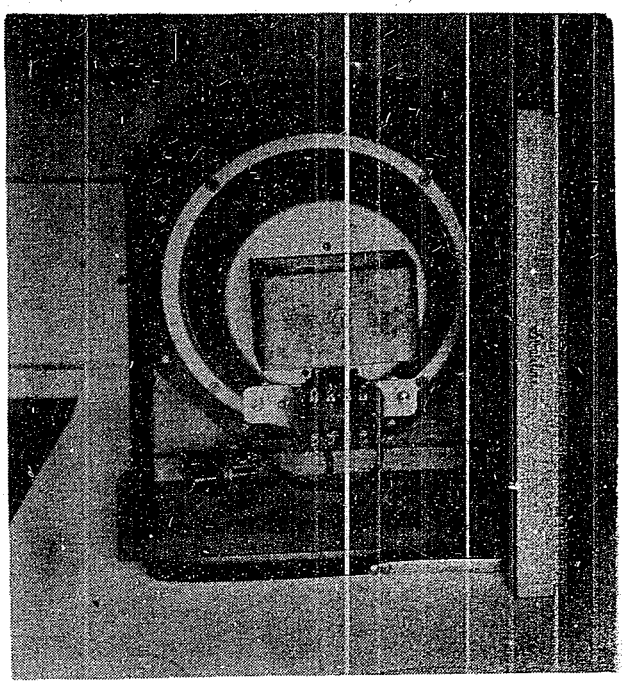

Figure 94
PERMANENT MAGNETIC DYNAMIC REPRODUCER
(TYPE 3) - SIDE VIEW

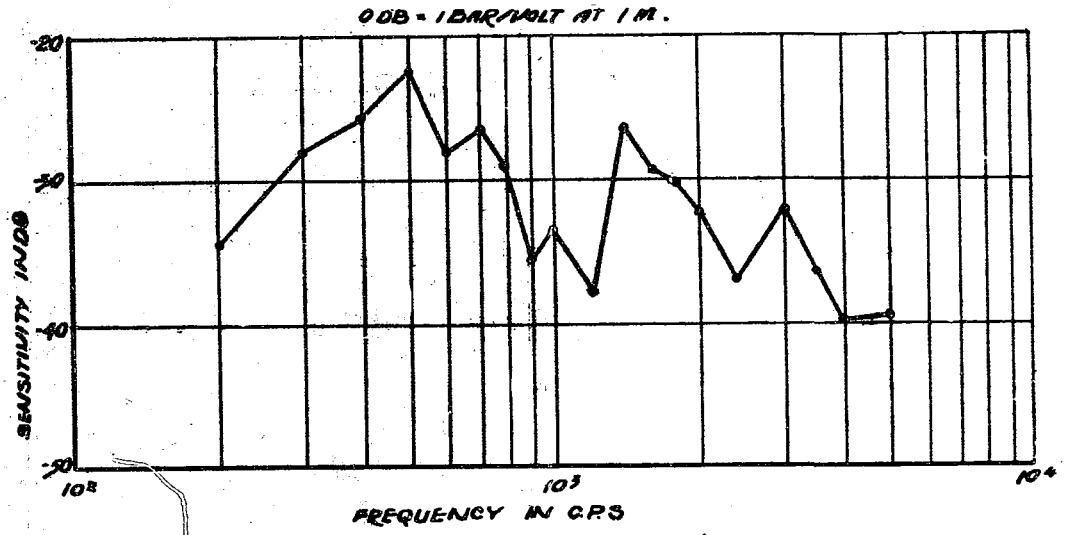

Figure 95
FREQUENCY RESPONSE - PERMANENT MAGNET
DYNAMIC REPRODUCER (TYPE 3)

Figures 98 and 99 are the assembly and detail drawings of the unit.

Figures 100, 101, and 102 are the characteristic performance curves of the unit.

The pressure output of this unit, calculated from the Japanese data, is 5.70 bars at 10 feet on the axis with 2.5 input at 1000 cycles.

This reproducer is the most modern of the reproducers used in Japanese Navy announcing systems.

The Bureau of Ships is familiar with the performance of the American made product. The Japanese copy appears to be a reasonably good facsimile.

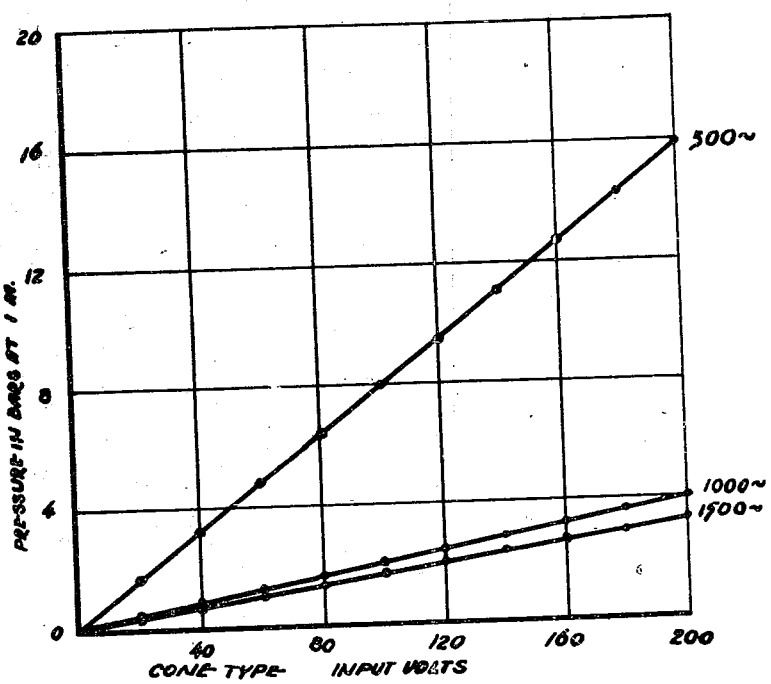

Figure 96
SENSITIVITY CURVE - PERMANENT MAGNET, DYNAMIC REPRODUCER (TYPE 3)

Emergency Power Supply - The general defense and engineer's announcing system normally operated from the ship's AC power supply. The automatic switch, automatic starter and motor generator (Figures 80 and 81) are provided for emergency operation from the ships DC supply or battery in the event the AC supply failed. The changeover is accomplished within five seconds and automatically. Under these circumstances the time delay relay controlling the plate power supply closes immediately. Referring to Figure 81, (automatic switch), the relay R_1 is energized when the ship's AC supply is normal. Contact R_1 is closed and R_1b_1 is open. When the AC supply fails contact R_1 opens and R_1b_1 closes. Contacts R_1b_2 close and relay R_2 closes thereby closing contacts b_1 and b_2; the motor starts and the generator is across the line.

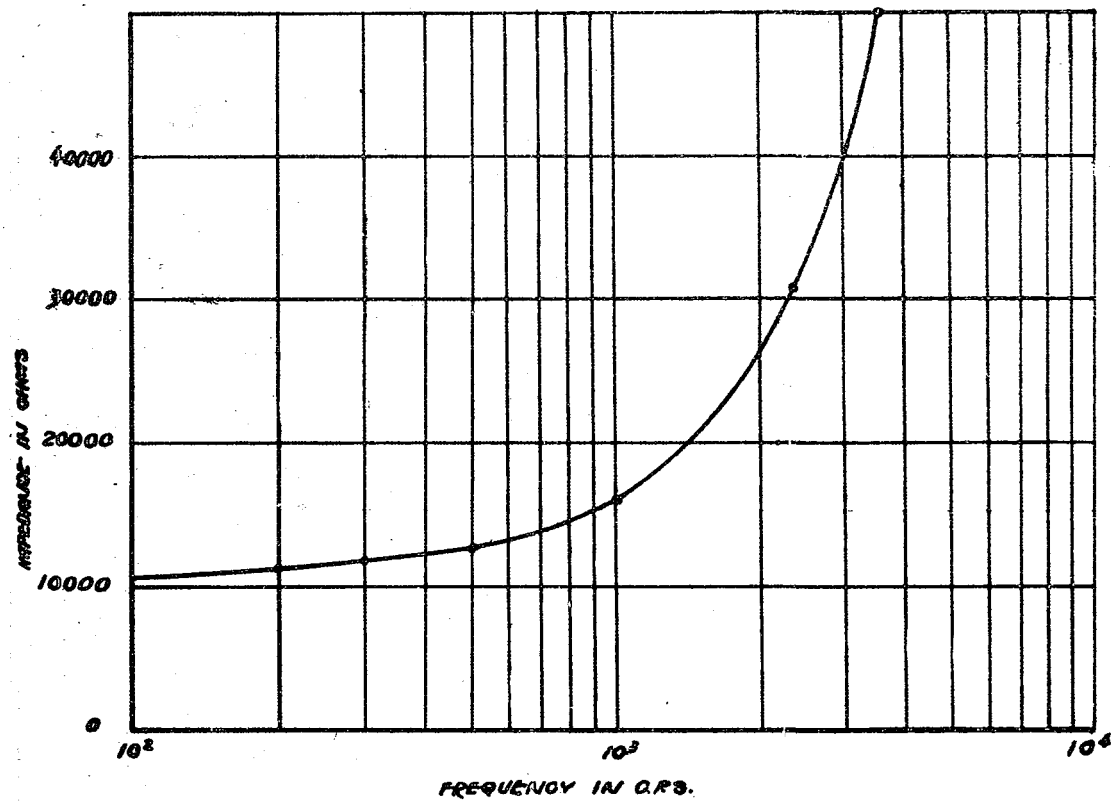

Figure 97
IMPEDANCE CURVE - PERMANENT MAGNET, DYNAMIC REPRODUCER (TYPE 3)

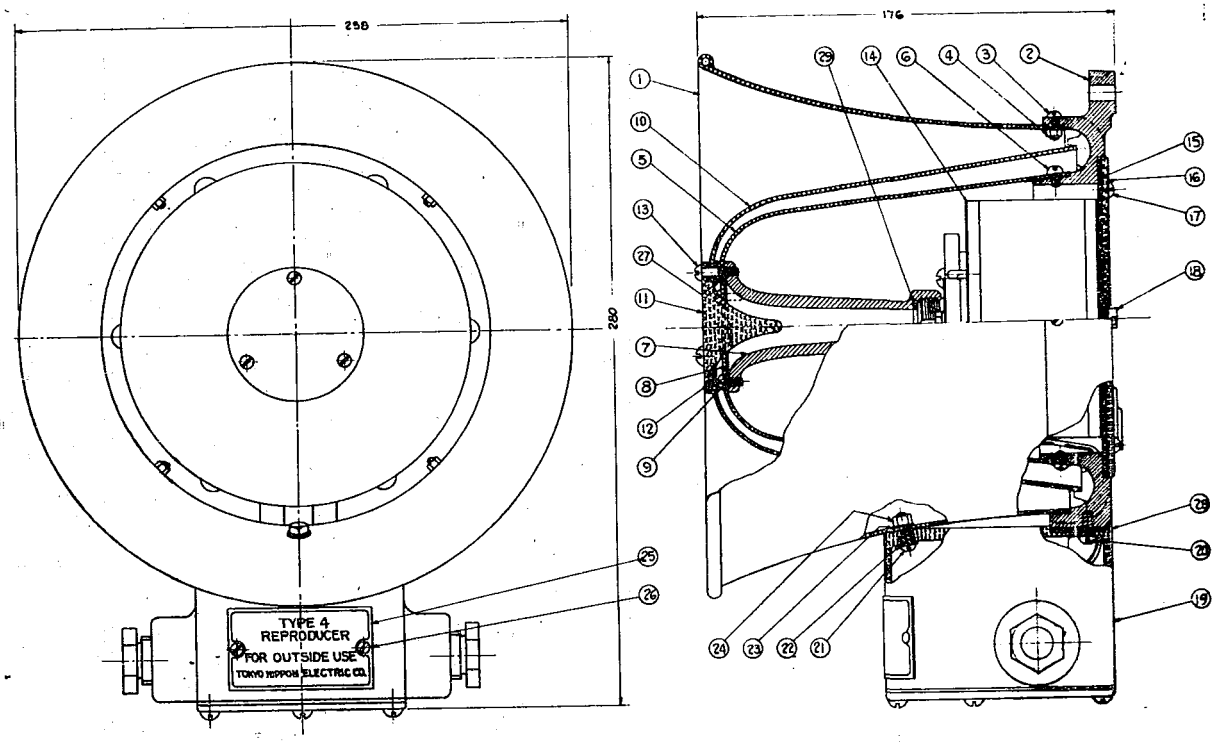

No.	Item	No.	Item
1	Outer Surface of Horn	16	Lower Plate
2	Mounting Base	17	-----
3	-----	18	-----
4	-----	19	Terminal Panel Unit
5	Inside Surface of Horn	20	-----
6	-----	21	-----
7	Receiver Mounting Fixture	22	Round Washer
8	Round Washer	23	-----
9	-----	24	-----
10	Middle Horn	25	Nameplate
11	Horn - Upper Plate	26	-----
12	Plate Packing	27	Round Washer
13	-----	28	Terminal Box Packing
14	Receiver Unit	29	Round Washer
15	Packing for Lower Plate		

Figure 98
PERMANENT MAGNET, FOLDED HORN
(TYPE 4) ASSEMBLY

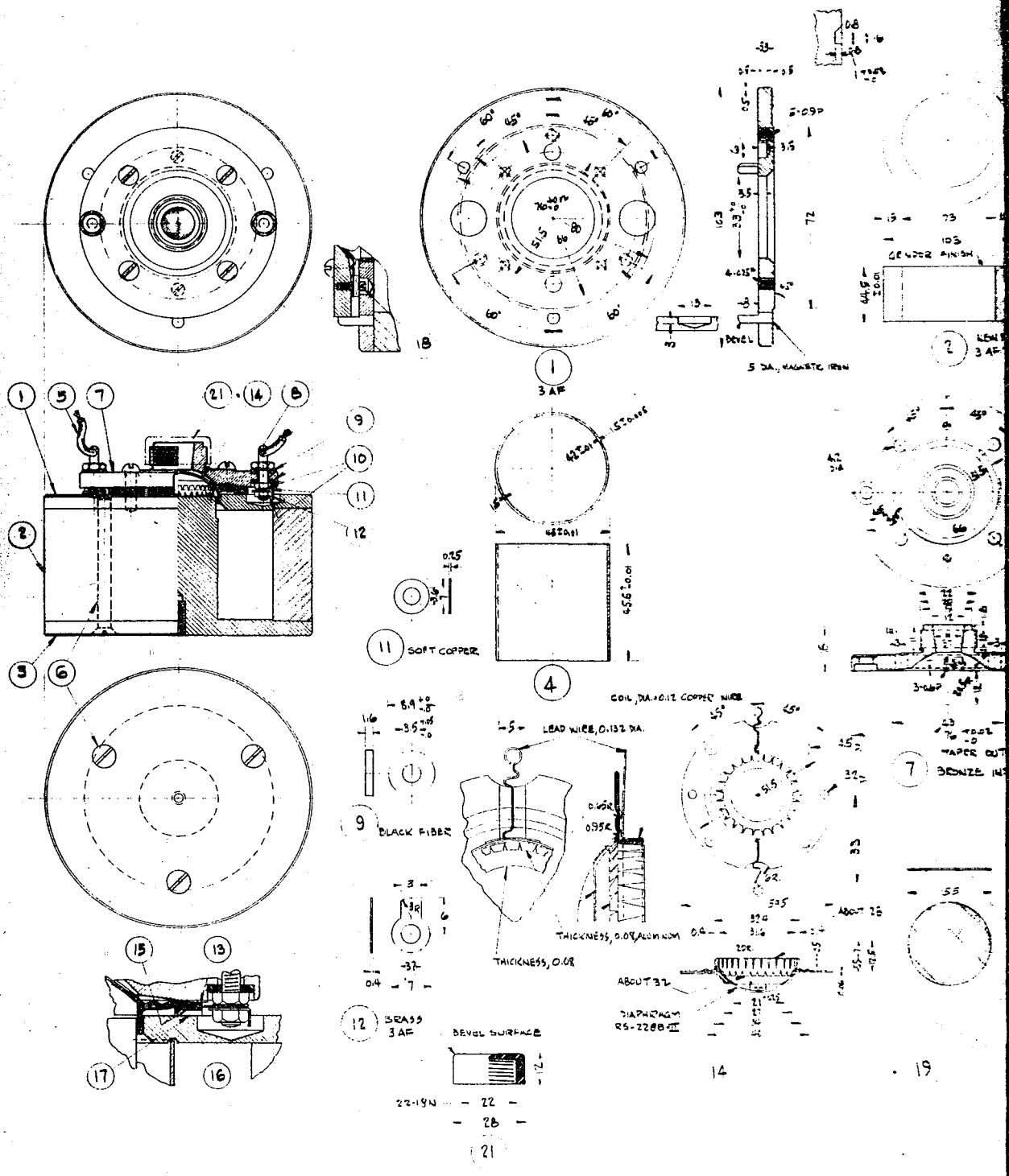

Figur
PERMANENT MAGNE
(TYPE 4) - MECH

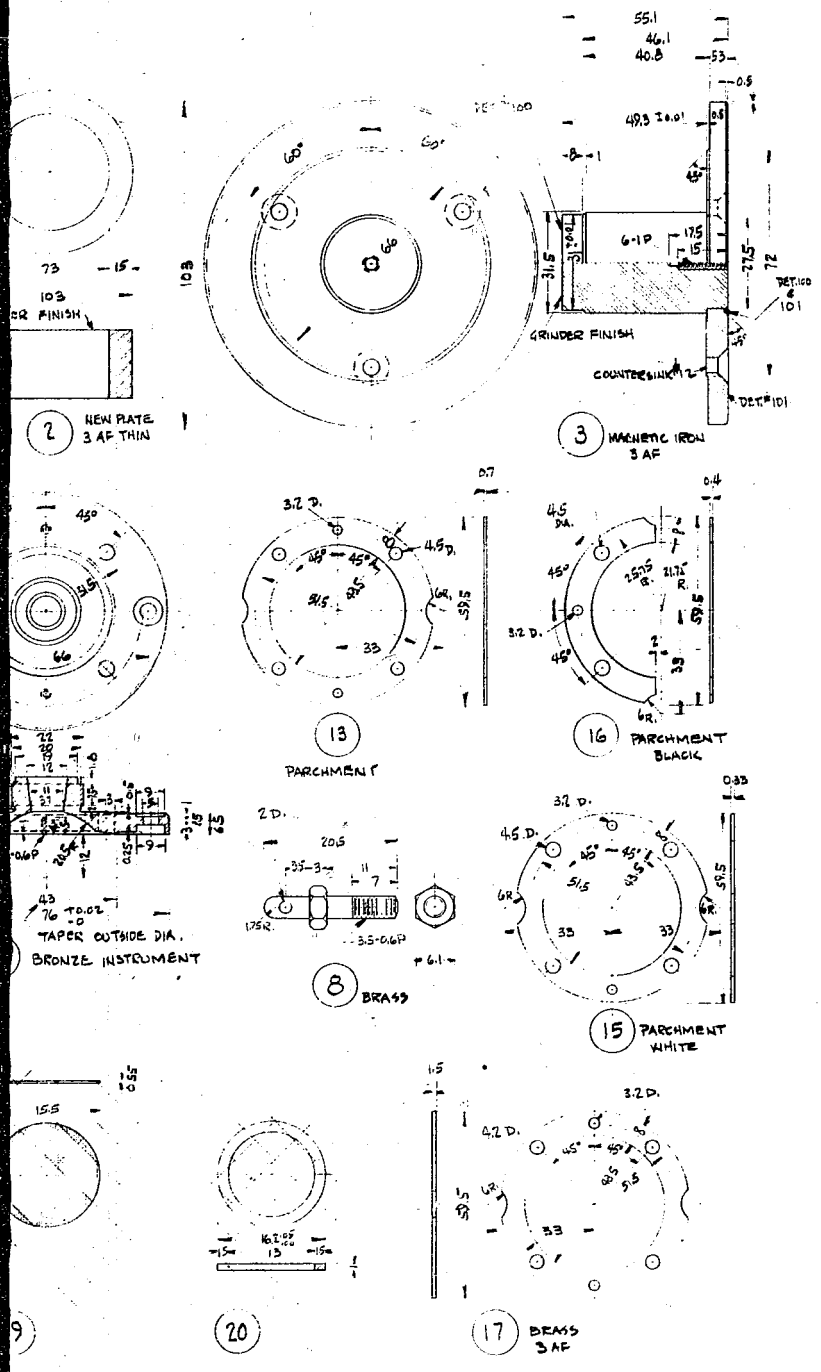

N-4095

NUMBER	MATERIAL	UNIT	DESCRIPTION	NOTE
1	MAGNETIC IRON	1	TOP MAGNETIC PLATE	
2	NEW C.S. PLATE	1	TOP MAGNETIC PLATE	
3	MAGNETIC IRON	1	BOTTOM MAGNETIC PLATE	
4				
5		2	OUTLET WIRE, LENGTH 200MM.	
6	BRASS	3	FLAT-HEAD SCREW	S5-S8
7	BRONZE INSTRUMENT	1	VIBRATOR BOARD FITTING	
8	BRASS	2	TERMINAL	
9	BLK. BAKELITE	4	TERMINAL INSULATOR WASHER	
10	BRASS	4	HEXAGON NUT	N3-5
11	TIN PLATE	2	VIBRATOR BOARD TERMINAL FITTING	
12	BRASS	2	VIBRATOR BOARD TERMINAL FITTING	
13	PARCHMENT	1	VIBRATOR BOARD INSULATING RING	
14			VIBRATOR BOARD (MOVABLE COIL)	
15	PARCHMENT	2	VIBRATOR BOARD INSULATING RING	
16	PARCHMENT	2	VIBRATOR BOARD INSULATING RING	
17	BRASS	1	VIBRATOR BOARD RING	
18	BRASS	2	FLATHEAD SCREW	S3-6
21	BAKELITE	1	PROTECTIVE HOUSING	

N-4095

NUMBER	PART NUMBER	SHEET	MATERIAL	DESCRIPTION
1	N-4095	1	MAGNETIC IRON	TOP MAGNETIC PLATE
2	"	2	NEW C.S. PLATE	MAGNET
3	"	3	MAGNETIC IRON	BOTTOM MAGNETIC PLATE
4				
5		2		OUTLET WIRE, 200 MM. LONG
6		3	BRASS	F.H.M5 x 3AF x 6 x 6.5
7	N-4095	7	BRONZE INSTRUMENT	VIBRATOR BOARD FITTING
8	"	8	BRASS	TERMINAL
9	"	9	BLK. BAKELITE	TERMINAL INSULATOR WASHER
10	M-84886	4	BRASS	A. HEX. B.N. x 3AF x 3.5
11	N-4095	11	TIN PLATE	VIBRATOR BOARD TERMINAL FITTING
12	"	12	BRASS	VIBRATOR BOARD TERMINAL FITTING
13	"	13	PARCHMENT	VIBRATOR COIL INSULATING RING
14	"	14		VIBRATOR BOARD (MOVABLE COIL)
15	"	15	PARCHMENT	VIBRATOR BOARD INSULATING RING
16	"	16	PARCHMENT	VIBRATOR BOARD INSULATING RING
17	"	17	BRASS	VIBRATOR BOARD RING
18		2		C.C.H.S.M5 x 3AF x 3 x 6
19				
20				
21	DM-620	1	BAKELITE	PROTECTIVE HOUSING

Figure 99
NT MAGNET, FOLDED HORN
) - MECHANISM DETAILS

Overall Circuit Operation - Schematic diagram Figure 81 shows the operation of the general defense and engineer's announcing system. The following comment will aid the reader in quickly interpreting the diagram.

The functions of a control box (transmitter station), using control box #1 as an example, are as follows:

(1) Switch K-1 (Power and talk switch):

(a) Starts MG from ship's DC power supply if AC power supply has failed. Normally the ships AC supply is energized to switch "S" on the voltage regulating panel. Closing switch "S" connects AC power to--

(i) Relay power supply - 48 volts DC output.

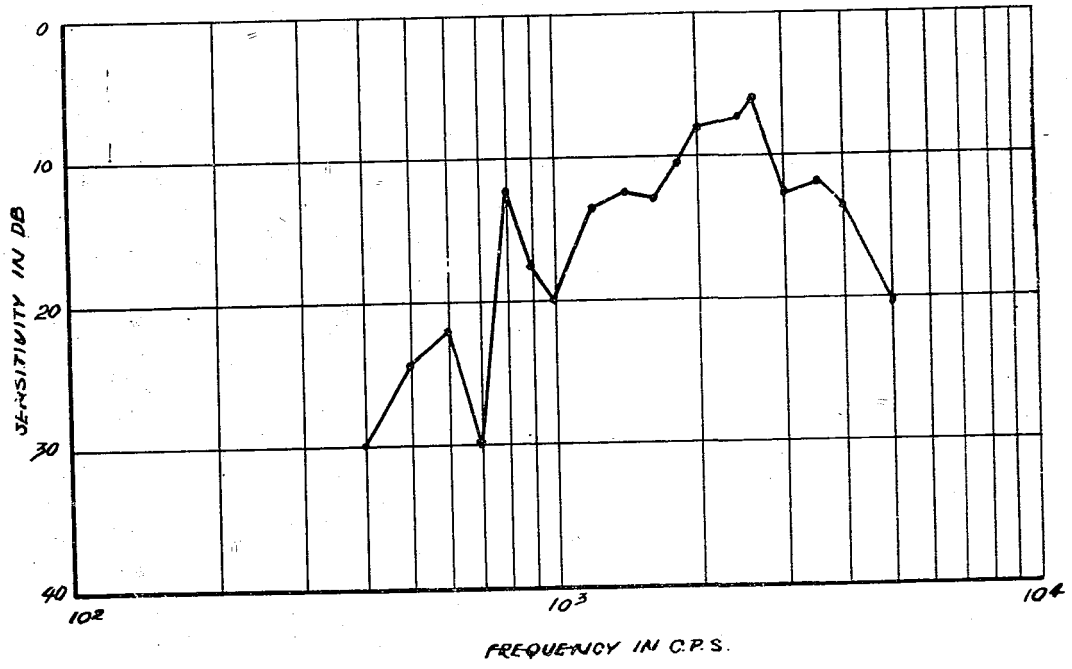

Figure 100
FREQUENCY RESPONSE - PERMANENT MAGNET FOLDED HORN (TYPE 4)

(ii) Rectifiers #1 and 2 (VA #1 and #2 filaments tied directly to these panels)

(iii) PA #1 and #2 (filaments only).

(b) Connects station microphone in input amplifier #2.

(c) Connects station alarm circuit to amplifiers #1 and #2.

(d) Opens all plate power control circuits to amplifier #1 from control boxes #2, #3, and #4.

(e) Energizes line 6 to the flight and hangar deck system.

(Note: Line 6 places 500 w flight deck amplifier in "ready" condition with bull horn and hangar deck reproducers connected to it.)

(f) Opens control circuit control box #5 to output switchboard establishing priority of CB-1 over the reproducers on entire system.

(g) Opens control circuit from CB #5 to plate power circuit for amplifier #1 establishing priority of CB #1 on amplifier #1.

(h) Opens alarm control circuit from CB #5 to amplifier #1 and flight deck and hangar deck systems.

(i) Closes alarm circuit for CB 1-5 and to amplifier #1 and flight deck and hangar deck system.

(j) Opens microphone circuit from CB #5 to amplifier #1 and closes microphone circuit from CB #1 to 4 to amplifier #1.

(Note: Input to amplifier #1 normally connected to CB #5 when CB #1-4 not in operation.)

(k) Close plate power circuit to amplifier #1.

(l) Closes microphone circuit from CB #1 to 4 to flight and hangar deck system.

(m) Connects "VI" and "Busy" to all CB.

(2) Switch K-2 (Selects engineer's system in addition to the General Defense system):

(a) Completes the alarm circuit from amplifier #2 to CB #1.

(b) Completes the microphone circuit from amplifier #2 to CB #1.

(c) Opens the microphone circuit from CB #6 to amplifier #2.

(d) Completes the plate power control circuit from CB #1 to amplifier #2.

(3) Switch K-3 (Attention signal):

(a) Closes attention signal circuit to amplifiers #1 and 2.

(b) Closes "VI" and "Busy" lamp circuits to CB #1 from amplifiers #1 and 2.

The operation of control boxes #2 to #4 inclusive is identical to that of CB #1.

Control box #5 operates through amplifier #1 only. The control circuits from the CB to amplifier #1 are open if CB #1 to 4 inclusive are using the amplifier. This station talks only to groups 1 and 2 and the damage control group. CB #5 locks out the flight deck and hangar deck (lead #4 and Rel #23 in flight deck and hangar deck amplifiers) and orders from this station are not transmitted to the flight and hangar decks.

Control box #6 operates through amplifier #2 only. The method of operation is similar to that of CB #5. It has no priority over amplifier #2. Control box #6 talks through the engineer's system only (two groups of reproducers in engineering spaces only).

Summarizing circuit operation, from the above circuit analysis the control relays may be classified as follows:

(1) Relays 3, 5, 7, and 9 are the input control, and interlock or priority relays.

(2) Relays 4, 6, 8, and 10 are the power interlock or selector relays.

(3) Relays 5 and 6 are the power control relay to the amplifiers.

(4) Leads #1 and 2 from general defense system are the microphone lines feeding the flight deck and hangar deck system (CB 1-4 inclusive only).

(5) Lead #3 is the attention signal control lead from general defense system to flight deck and hangar deck system (CB 1-4 inclusive only).

(6) Lead #4 is the lockout control from CB #5 to general defense system.

(7) Lead #6 is the main control lead from the general defense system to the flight deck and hangar deck system energizing that system for all transmissions from CB 1 to 4 inclusive.

There are an infinite number of relay combinations possible to perform various functions in the desired order. Figure 81 does not contain a particularly novel combination of relay circuits but it does show a different circuit arrangement than used by the U. S. Navy and one which may be of interest to the Bureau of Ships. As it is difficult to evaluate the circuits used, it is safe to assume that they performed the desired function.

b. Flight and Hangar Deck Announcing Systems

The summary comments prefacing the previous section of this report, "General Defense and Engineer's Announcing System", are applicable to the flight deck and hangar deck system with the exception that blast protection was provided for the bull horn. The blast valve provided was a mechanical device, solenoid operated and located in a position where snow and ice might seriously interfere with its operation. Failure of the valve to open would seriously impair the effectiveness, if not prevent completely the operation of the flight deck system.

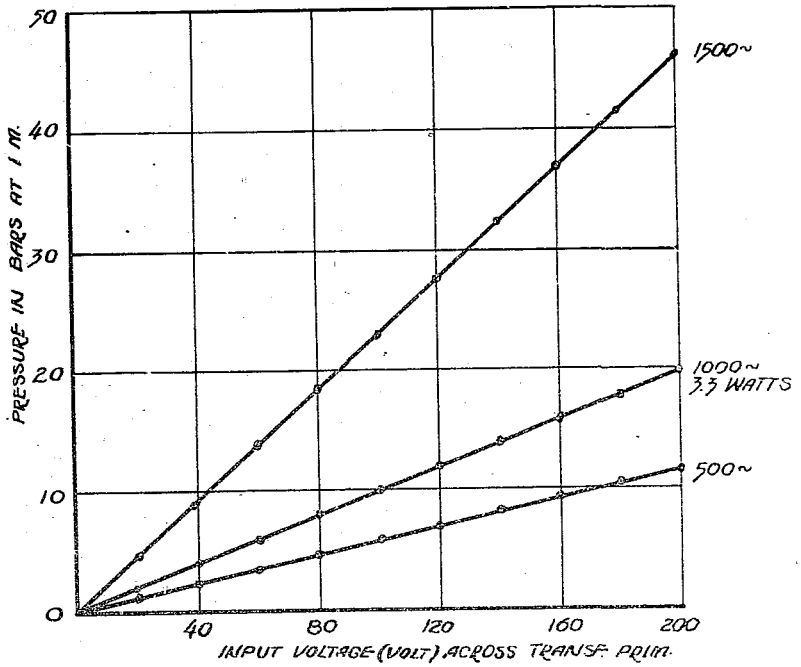

Figure 101
SENSITIVITY CURVE - PERMANENT MAGNET
FOLDED HORN (TYPE 4)

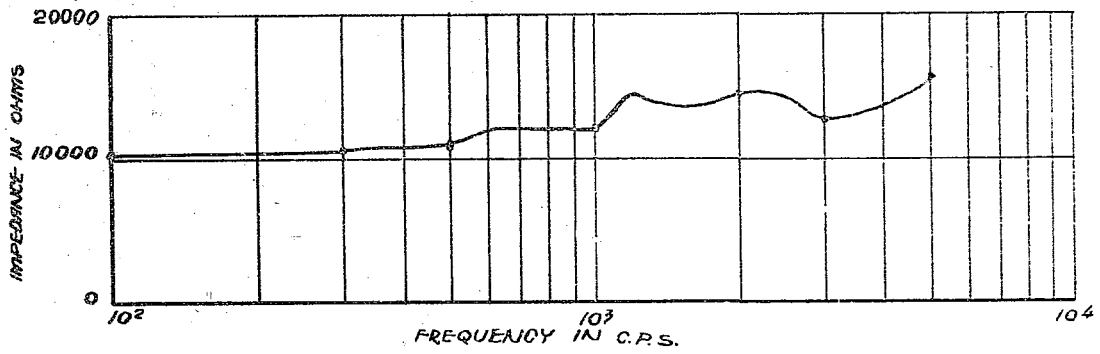

Figure 102
IMPEDANCE CURVE - PERMANENT MAGNET
FOLDED HORN (TYPE 4)

There was a complete lack of flexibility in this system in that failure of the single 500 watt amplifier would prevent operation of the bull horn. Failure of the diaphragm in the bull horn would necessitate securing it.

The audio power tubes used were all of types which require bias supplies and bias protection. The Japanese did not use zero bias class "B" tubes in their equipment.

The system as a whole was obsolete by U. S. Navy standards.

The components of this system are shown in block diagram Figure 103. The system is comprised of the following major components:

(1) One control box (transmitter control station) located aft of the navigating bridge (but on the same deck) overlooking the flight deck.

(2) One amplifier.

(3) One bull horn.

(4) One set of reproducers for hangar decks.

(5) One emergency power supply comprising one automatic switch, one automatic starter and one D.C.-A.C. motor generator.

The major components, listed above are, described as follows:

Control Box (Transmitter Station - Figure 104) - This unit is similar in general design and construction to the control box described for the general defense system. There was no microphone mounted in the unit. A portable microphone was used and it plugged into a receptacle mounted on the side of the control box.

Amplifier - The assembly drawing of the latest type of AC operated amplifier is given in Figure 105.

This unit is similar in general design and construction to the amplifier described for the general defense system. The major differences are as follows:

(1) Contains one voltage amplifier instead of two.

(2) Contains one 100 watt power amplifier identical to that used in the general defense system and one 500 watt power amplifier.

(3) Variation in relay control circuits.

The amplifier circuits are shown in Figure 106.

Bull Horn, Type SPL-1 and SPL-2 - These units are generally similar, SPL-2 is a copy of a unit of American design and manufacture. It was used in about 1934 (less blast valve) by the U. S. Navy. SPL-1 is a reduced size model of SPL-2, the design of which was attempted by the Japanese and which they admit was unsuccessful.

The assembly of SPL-2 and the blast valve used with it are shown in Figures 107 and 108, respectively.

The performance of SPL-1 and 2 is covered by Figures 109, 110, 111, 112, and 113.

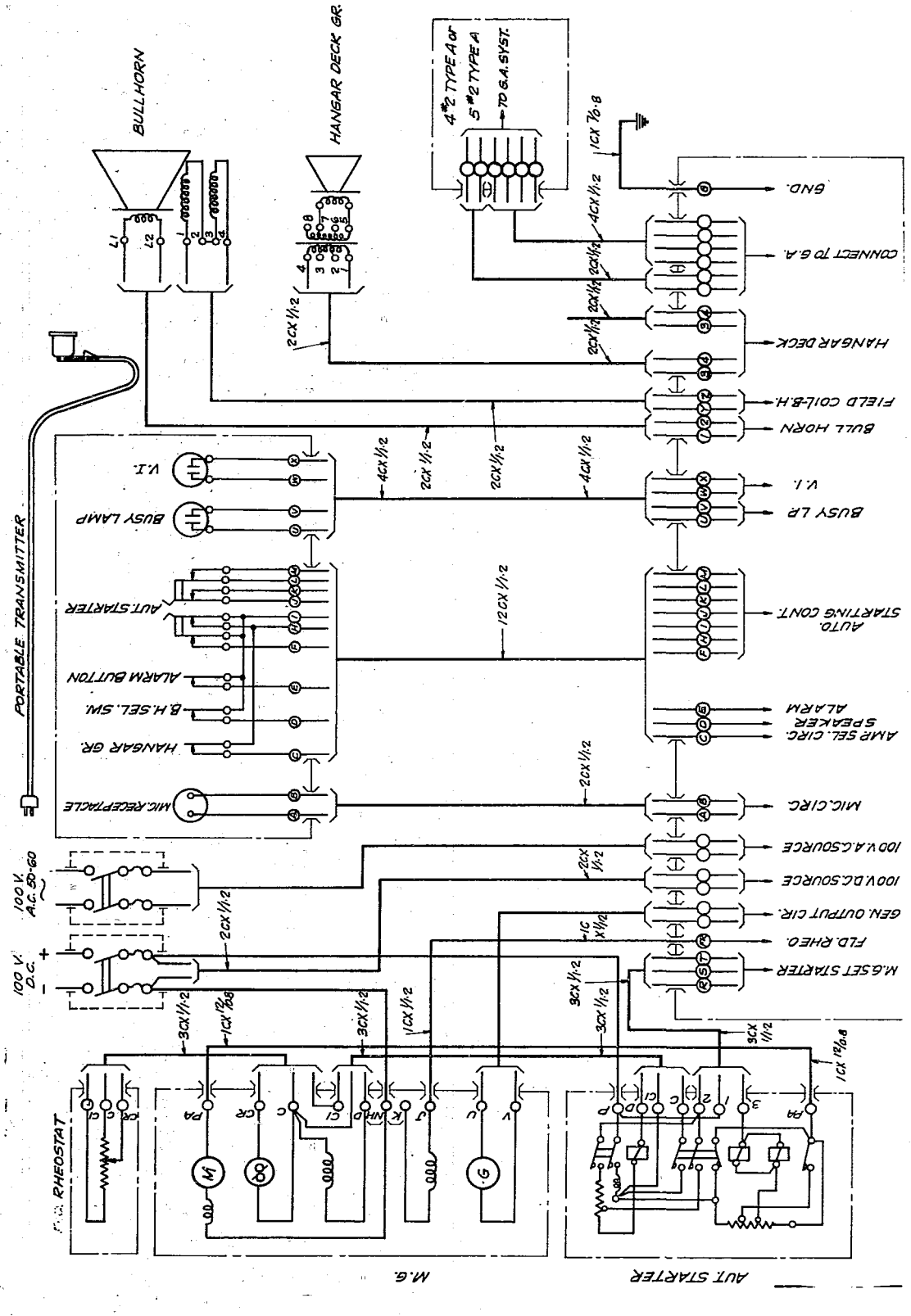

Figure 103
BLOCK DIAGRAM - FLIGHT DECK ANNOUNCING SYSTEM

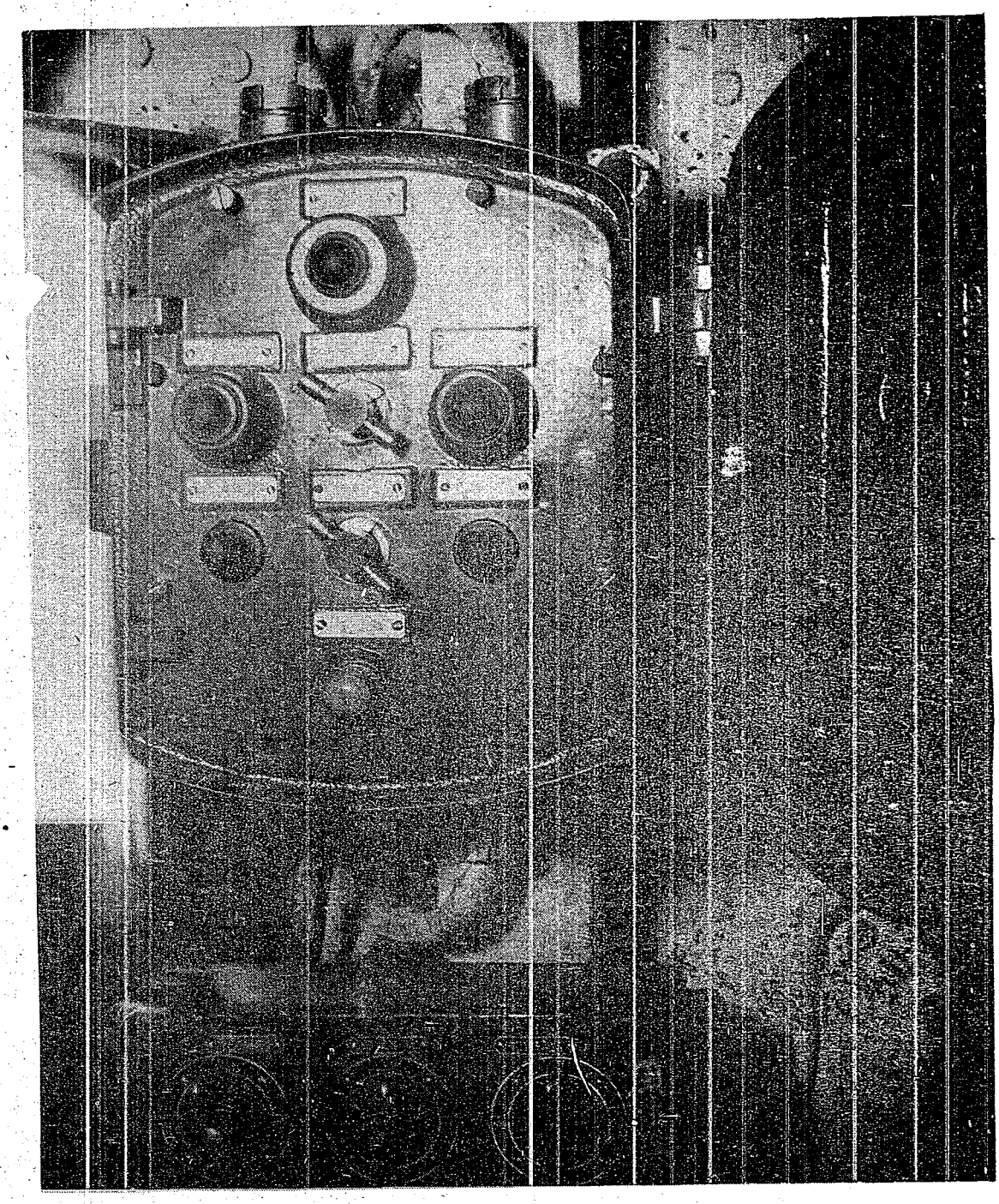

Figure 104
CONTROL BOX FOR FLIGHT DECK
HANGAR DECK SYSTEM

Figure 104
CONTROL BOX FOR FLIGHT DECK
HANGAR DECK SYSTEM

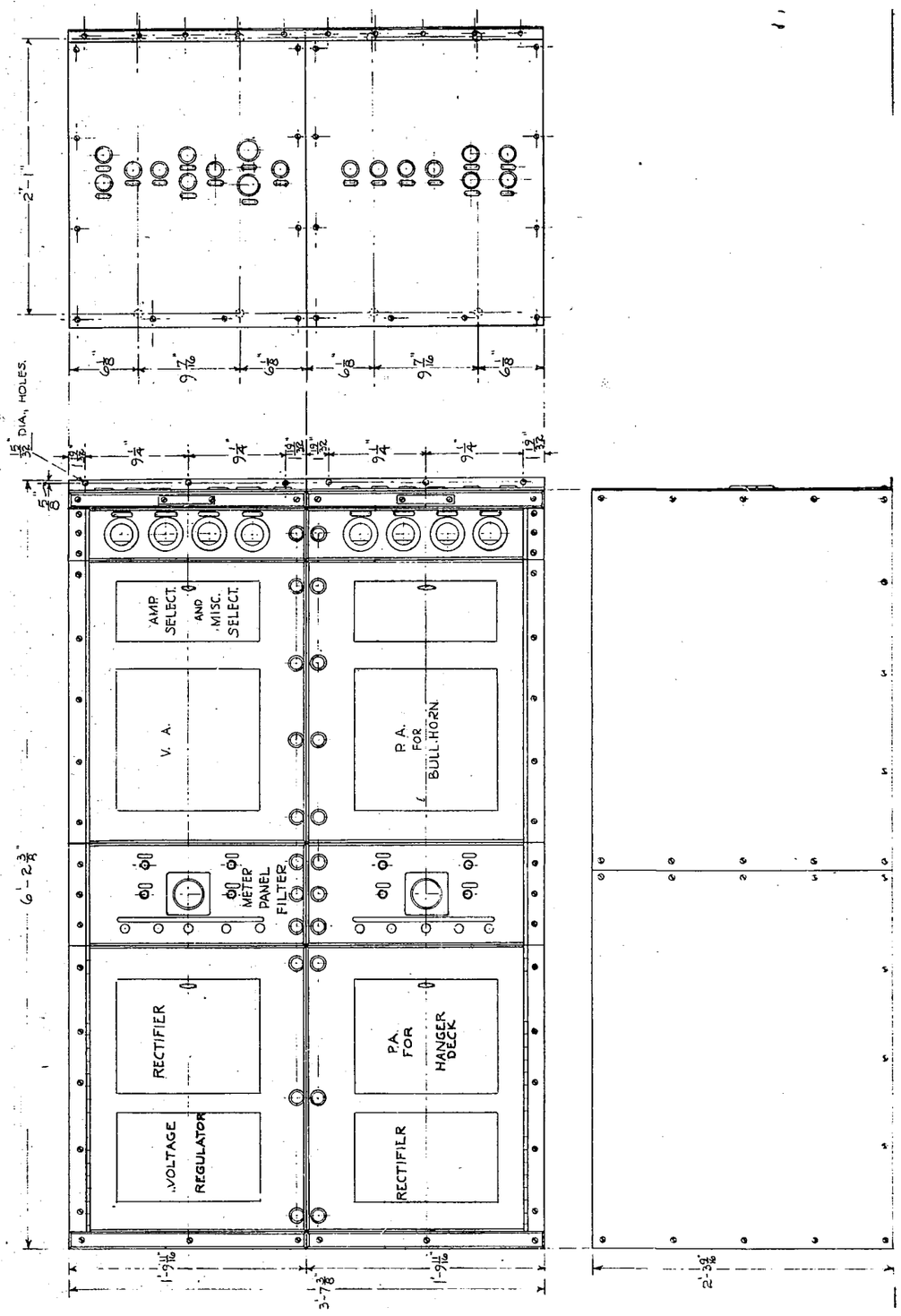

Figure 105
AMPLIFIER ASSEMBLY - FLIGHT DECK
ANNOUNCING SYSTEM

Quick comparison with U. S. Navy specifications for bull horn shows the pressure output of SPL-2 had been calculated for a point 30 feet from the horn and on the axis, to be 130 bars (116DB) with 500 watts input at 1500 cycles. (The 1500 cycle sensitivity was used because it is more nearly an average value than the 1000 cycle sensitivity. The Japanese rated SPL-2 at 300 watts.)

The SPL-2 reproducer, which was the better of the two Japanese units, was very inferior in power handling capacity and sensitivity to units now in use by the U. S. Navy. They had the added disadvantage of having single unit driver mechanisms (failure of one diaphragm secures the unit), requiring DC field excitation, and the complication of an external mechanical blast valve.

The Japanese carrier KATSURAGI had only one bull horn which was mounted on the inboard bulkhead of the island and very close to the flight deck. It was pointed aft. Flight deck coverage was inadequate based on U. S. Navy standards.

Emergency Power Supply - Emergency power supply was identical with that provided for the general defense system.

Overall Circuit Operation - The schematic diagram in Figure 106 shows the operation of the flight and hangar deck system and its relation to the general defense system. The following brief resume will aid the reader in analyzing the diagram.

The functions of the control box are as follows:

(1) Switch K-1 (Power and talk switch):

(a) This switch starts the emergency power supply if the ship's AC supply fails.

(b) Energizes 500 watt amplifier to "ready condition, connects 500 watt amplifier to both bull horn and hangar deck speakers.

(c) Disconnects 100 watt amplifier from the hangar deck speaker and the output of the voltage amplifier.

(2) Switch K-1 plus K-4 (Power-talk switch - 100 watt amplifier hangar deck):

(a) 100 watt amplifier energeized to "ready" condition and connected to hangar deck reproducers and output of voltage amplifier.

(Note: 500 watt amplifier not energized for this condition.)

(3) Switch K-1 plus K-3 (Power and talk switch - 500 watt amplifier only to bull horn):

(a) 500 watt amplifier energized to "ready" condition and connected to bull horn only. (100 watt amplifier not energized.)

(4) Switch K-1 plus K-2 (Power and attention signal switch):

(a) This setup is identical to operation as described under switch K-1 except the attention signal is transmitted.

Figure 106
SCHEMATIC DIAGRAM - FLIGHT DECK AMPLIFIER

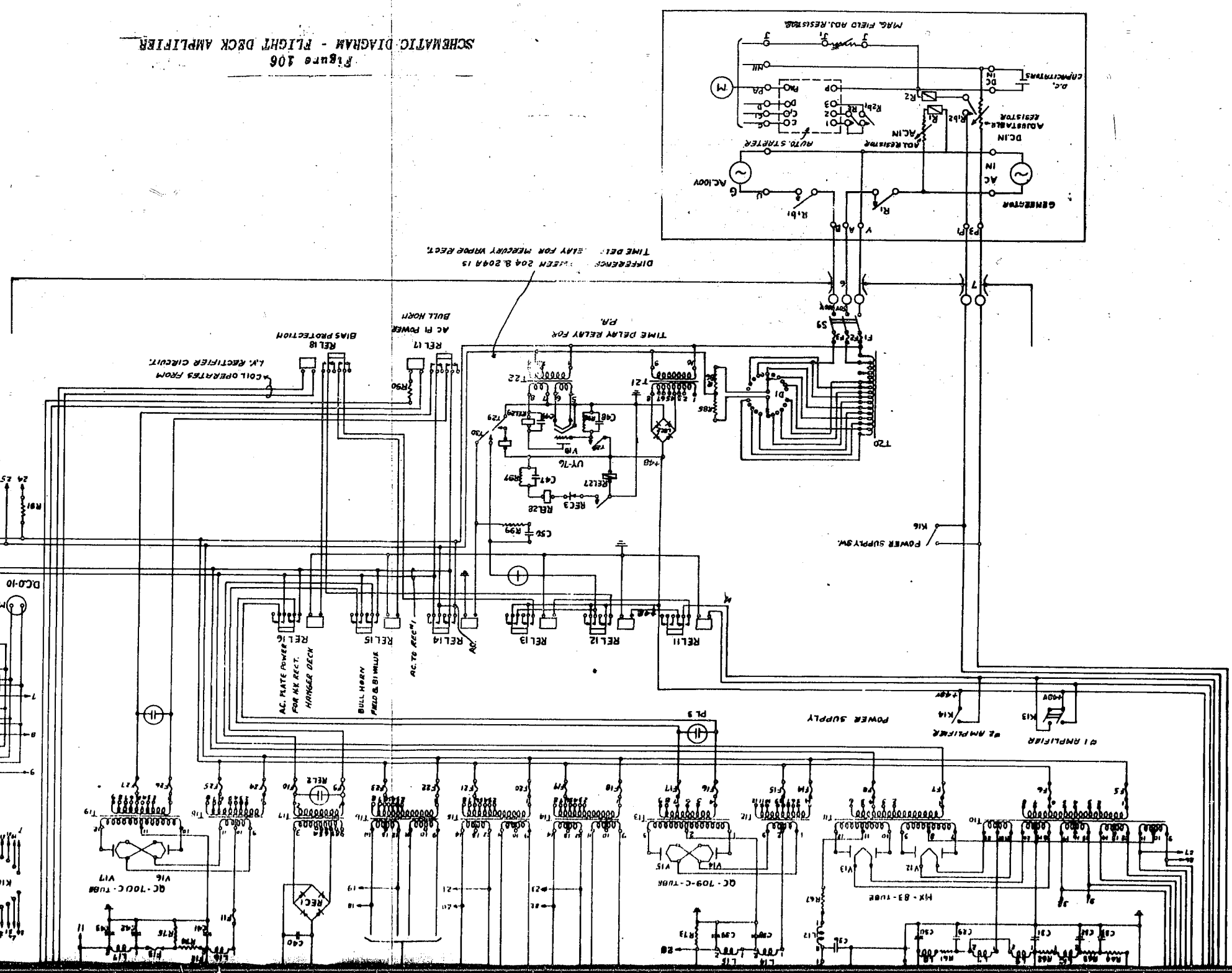

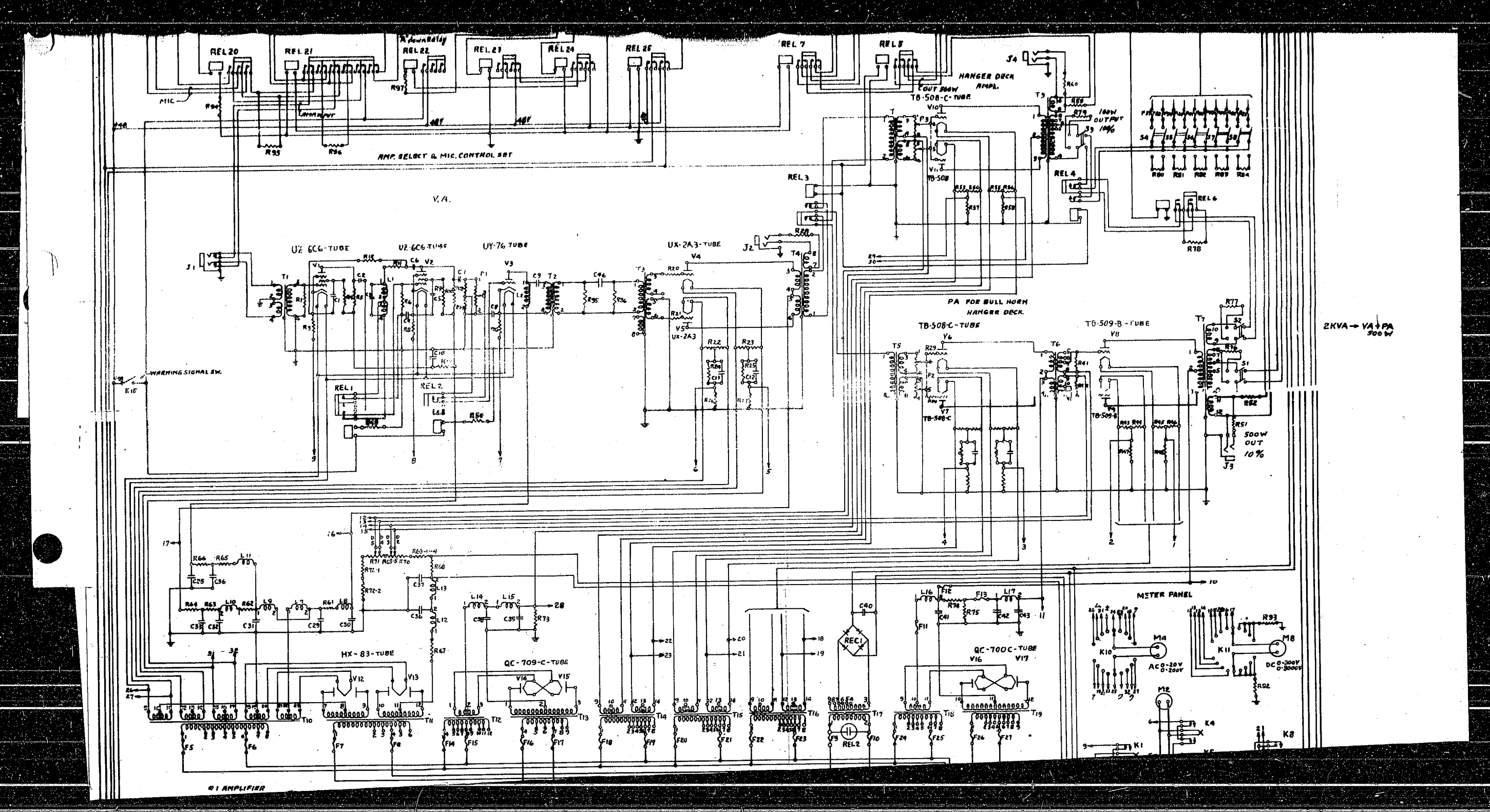
REL 20
REL 21
REL 22
REL 23
REL 24
REL 25
REL 7
REL 8
MIC
AMP. SELECT & MIC. CONTROL SET
HANGER DECK AMPL.
TB-508-C-TUBE
TB-508
REL 3
REL 4
REL 6
V.A.
UZ 6C6-TUBE
UZ 6C6-TUBE
UY-76 TUBE
UX-2A3-TUBE
UX-2A3
WARNING SIGNAL SW.
REL 1
REL 2
PA FOR BULL HORN HANGER DECK.
TB-508-C-TUBE
TB-509-B-TUBE
TB-508-C
TB-509-B
500W OUT 10%
2KVA → VA → PA 500 W
HX-83-TUBE
QC-709-C-TUBE
QC-700C-TUBE
METER PANEL
AC 0-20V 0-200V
DC 0-300V 0-3000V
#1 AMPLIFIER

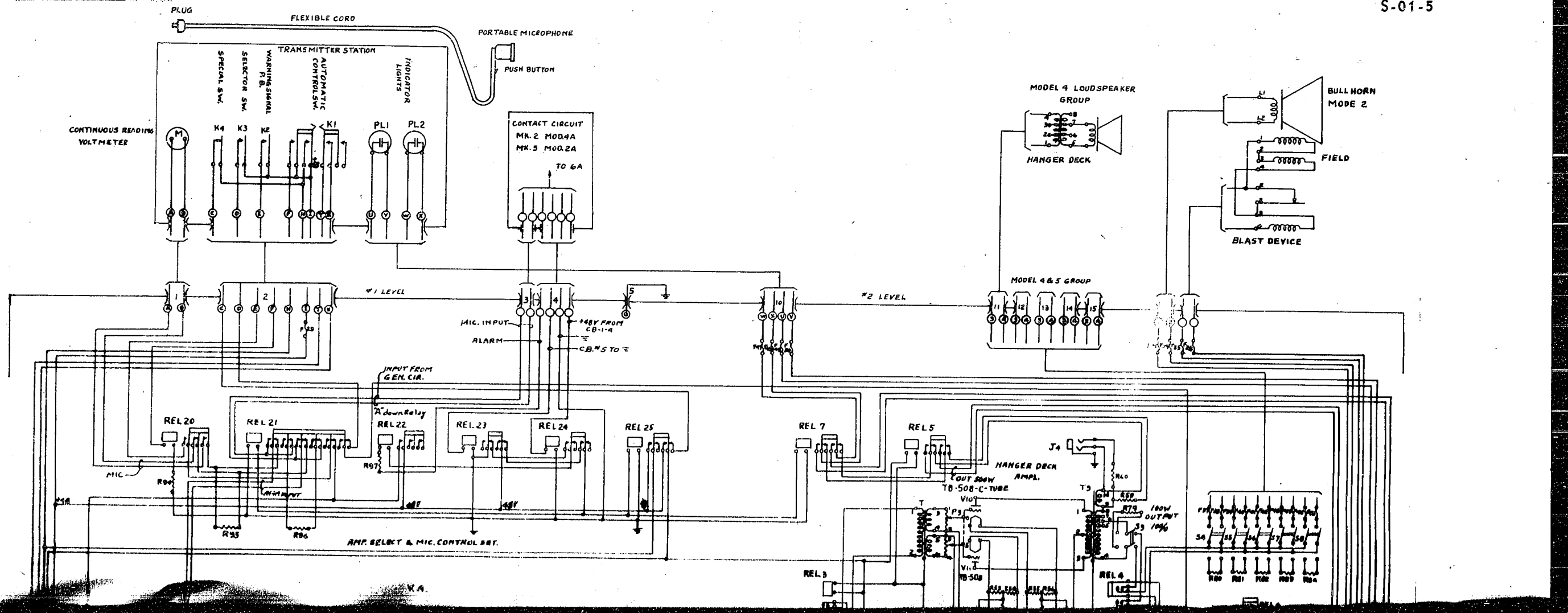
PLUG
FLEXIBLE CORD
PORTABLE MICROPHONE
PUSH BUTTON
TRANSMITTER STATION
SPECIAL SW.
SELECTOR SW.
WARNING SIGNAL P.B.
AUTOMATIC CONTROL SW.
INDICATOR LIGHTS
CONTINUOUS READING VOLTMETER
K4
K3
K2
K1
PL1
PL2
CONTACT CIRCUIT
MK. 2 MOD 4A
MK. 5 MOD 2A
TO 6A
MODEL 4 LOUDSPEAKER GROUP
HANGER DECK
BULL HORN MODE 2
FIELD
BLAST DEVICE
MODEL 4 & 5 GROUP
#1 LEVEL
#2 LEVEL
MIC. INPUT
ALARM
24V FROM C.B.-1-4
C.B.'S TO 6
INPUT FROM GEN. CIR.
A'down Relay
REL 20
REL 21
REL 22
REL 23
REL 24
REL 25
REL 7
REL 5
REL 3
REL 4
MIC
R94
R95
R96
R97
AMP. SELECT & MIC. CONTROL SET.
HANGER DECK AMPL.
OUT ROW
TB-508-C-TUBE
V10
V11
TB-508
180W OUTPUT
10%

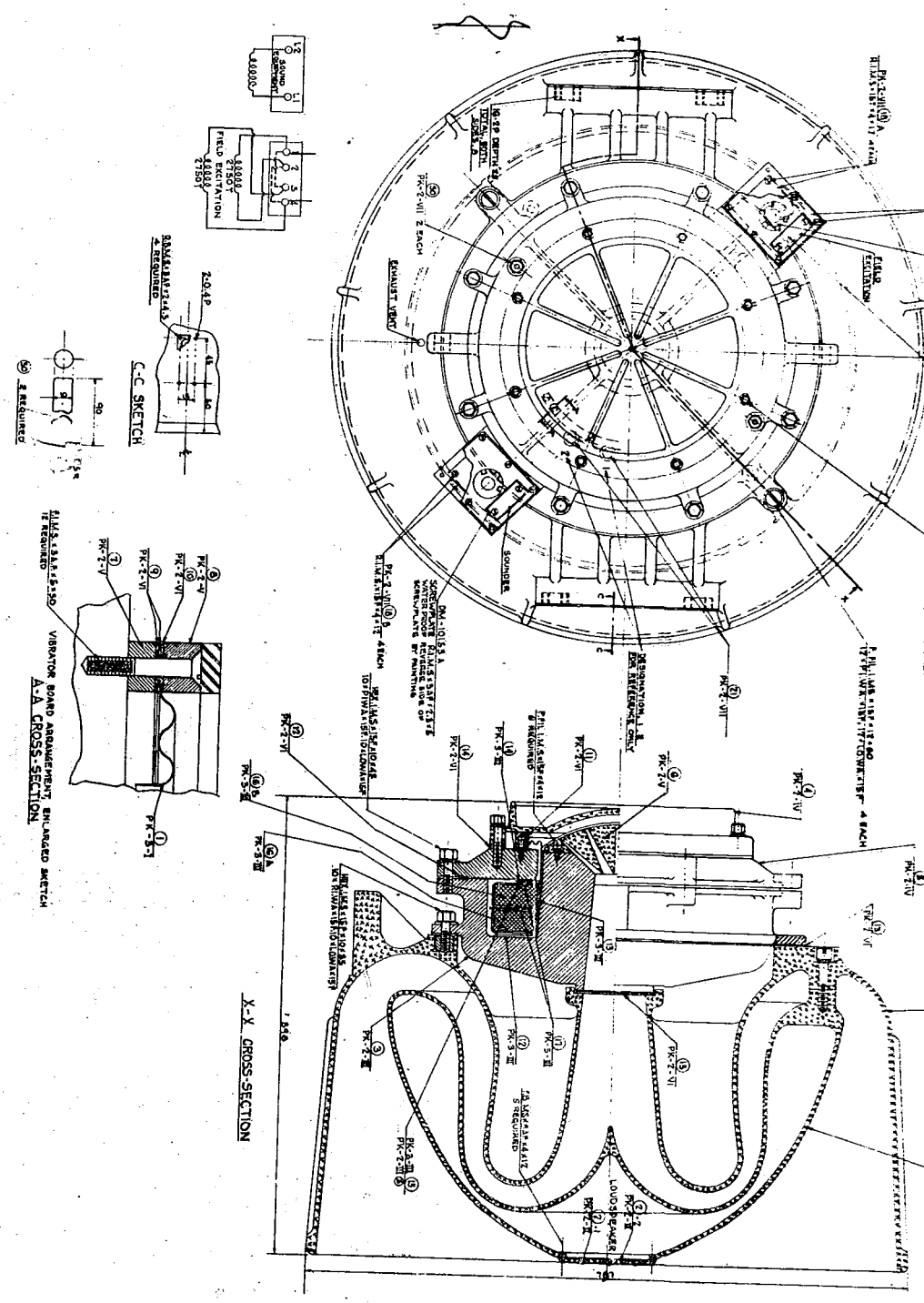

Figure 107
BULL HORN (SPECIAL 2) ASSEMBLY

RESTRICTED

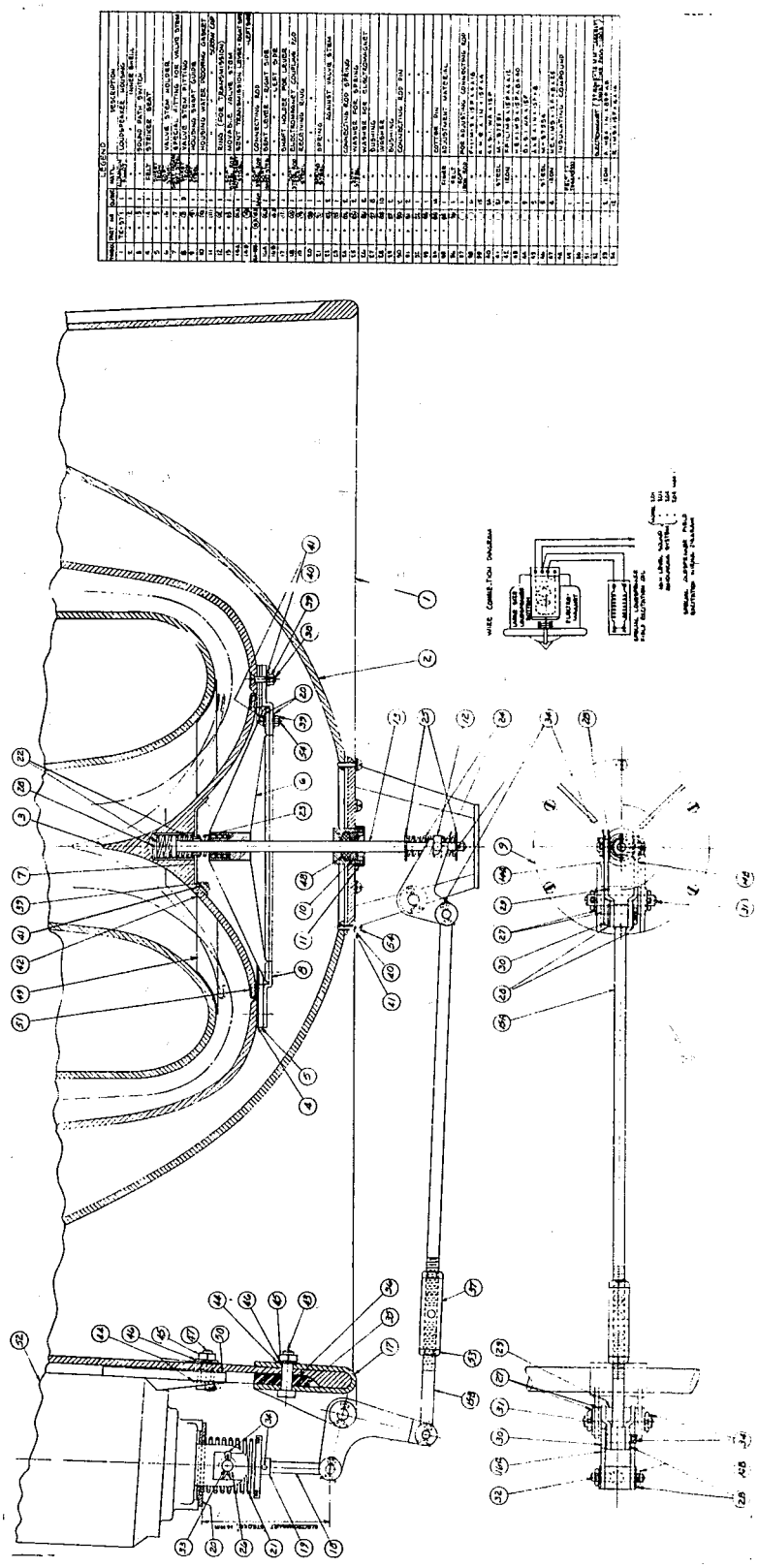

Figure 108
BLAST VALVE FOR BULL HORN (SPECIAL 2) ASSEMBLY

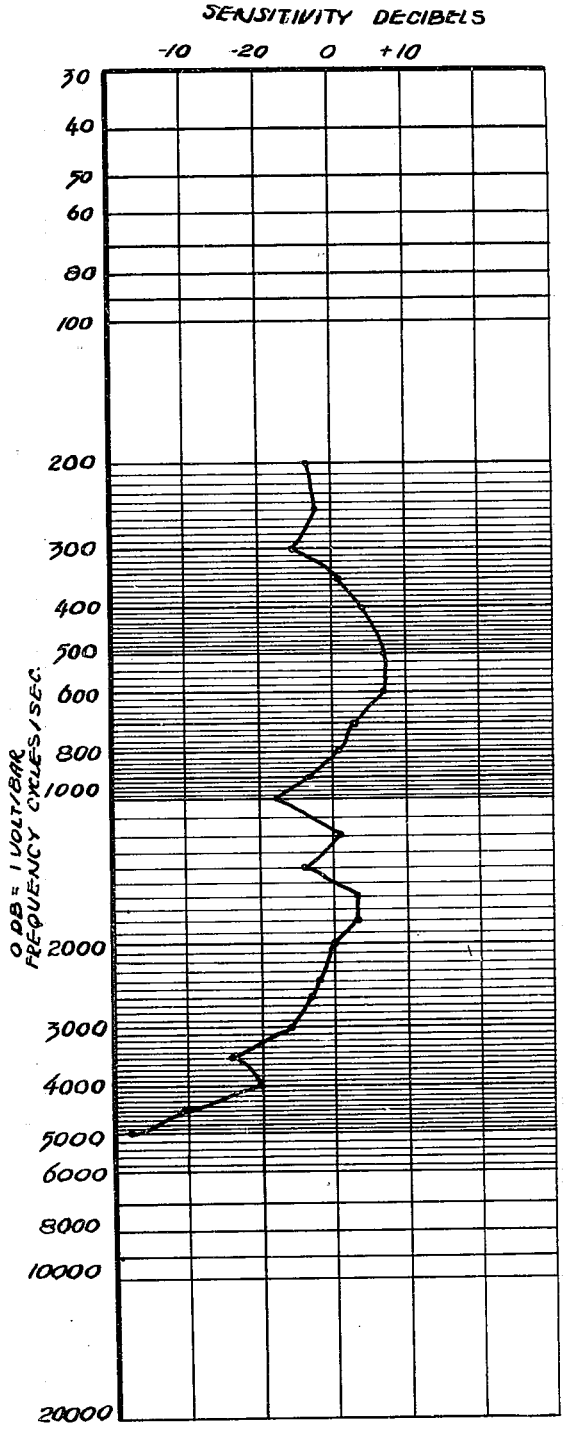

NOTE:
1. TEST VOLTAGE = 50 V (CONSTANT)
2. Z AT 1000 = 12Ω
3. DISTANCE SPEAKER TO MIC. 4M.

Figure 109
FREQUENCY RESPONSE - BULL HORN (SPECIAL 2)

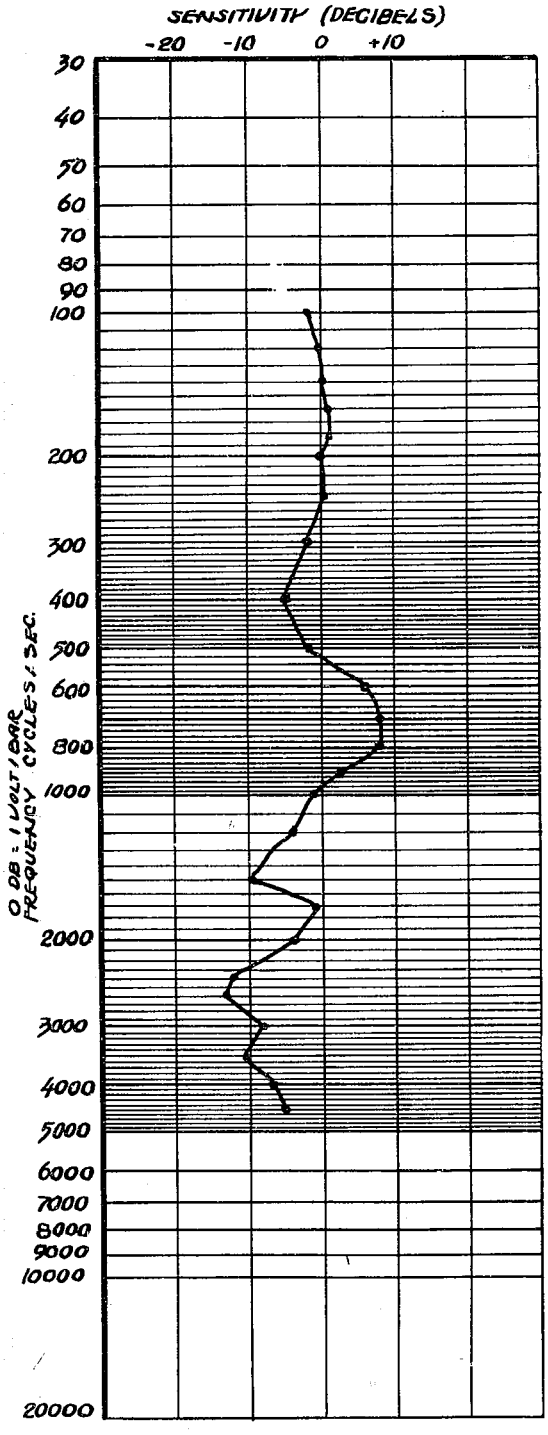

NOTE:
1. TEST VOLTAGE = 50 V (CONSTANT)
2. Z AT 1000 ~ = 36.8 Ω
3. DISTANCE SPEAKER TO MIC. 4 M.

Figure 110
FREQUENCY RESPONSE - BULL HORN (SPECIAL 1)

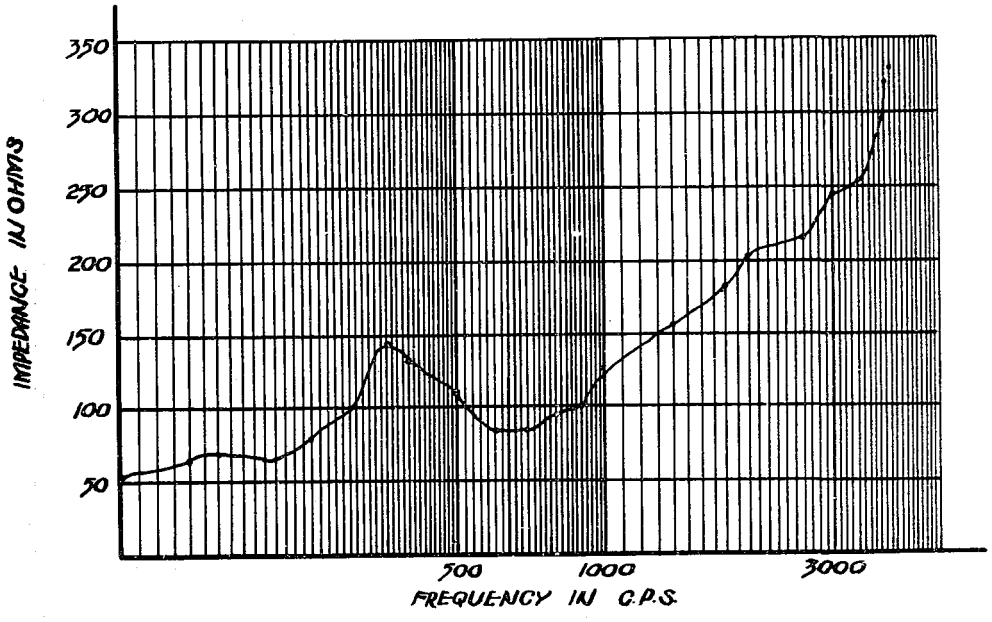

Figure 111
IMPEDANCE CURVE - BULL HORN
(Special 2)

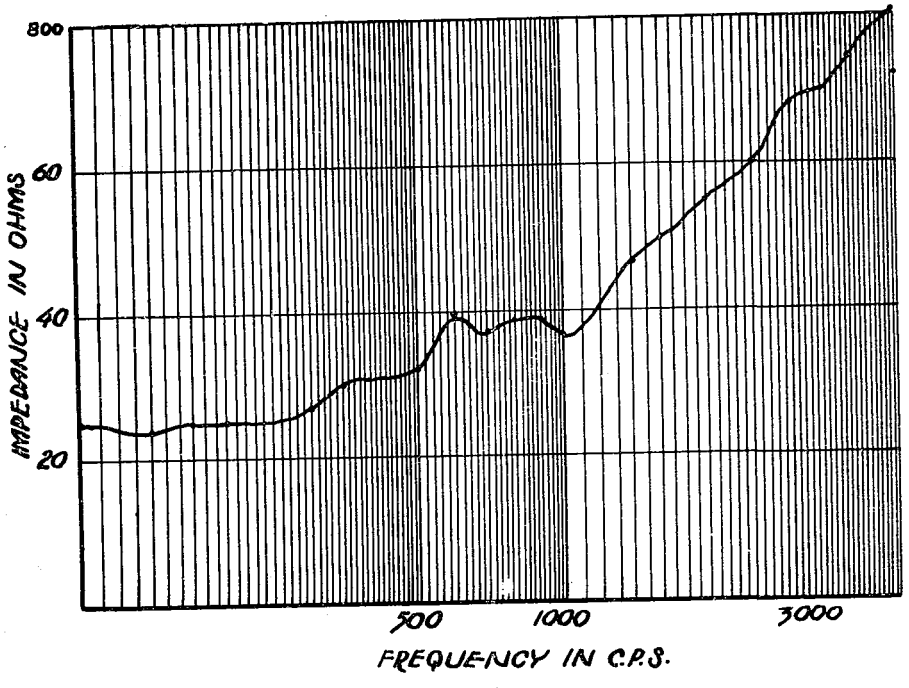

Figure 112
IMPEDANCE CURVE - BULL HORN
(SPECIAL 1)

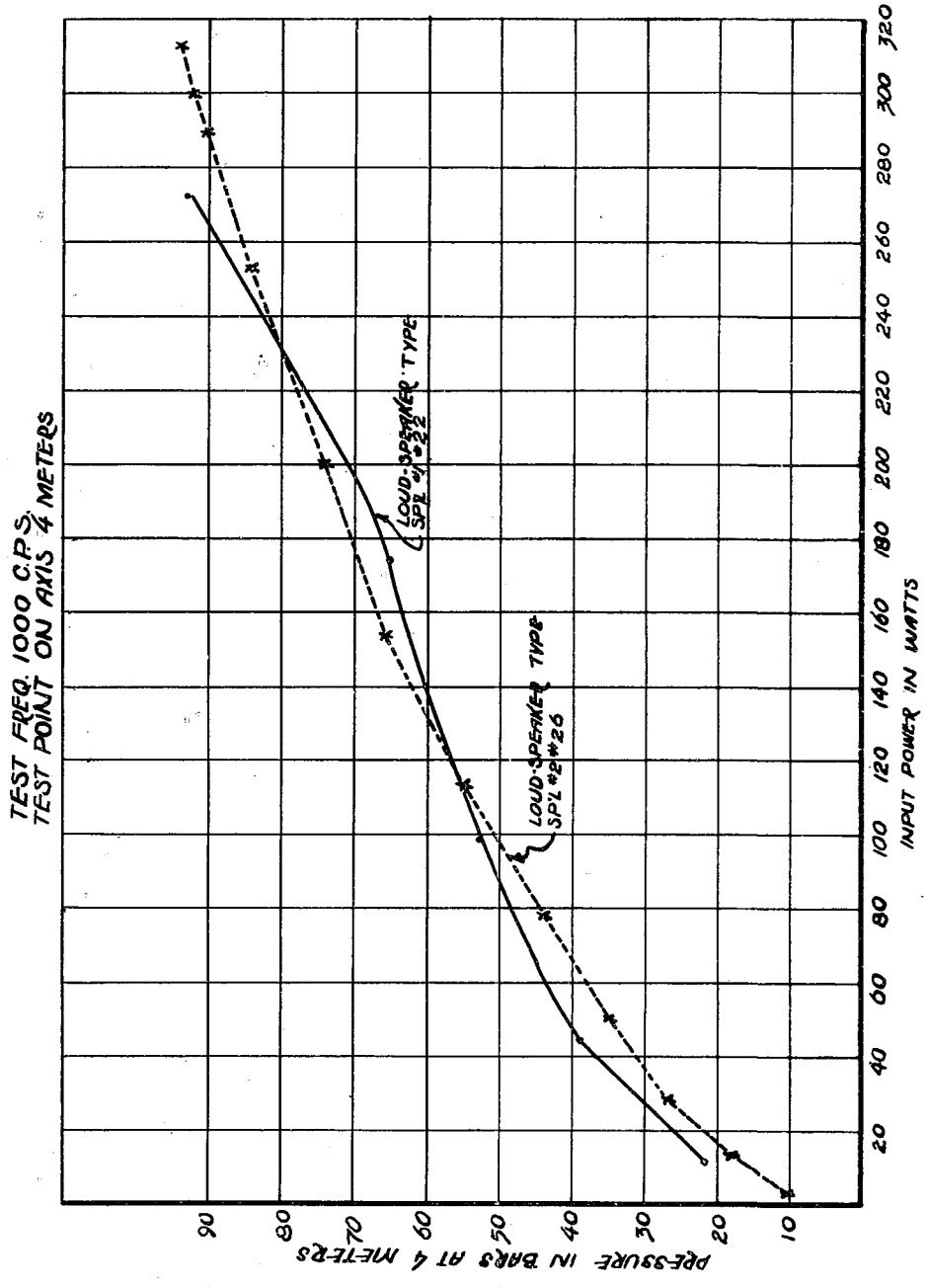

Figure 113
SENSITIVITY CURVE - BULL HORNS
(SPECIAL 1 AND SPECIAL 2)

The circuits described above showed no new developments or art. The layout and control of the flight and hangar deck systems was quite radically different from that used on U. S. Navy vessels of the carrier type. Assuming that it was the function of the flight and hangar deck system to provide voice communication with personnel on the flight and hangar decks and in planes on the deck, the system was entirely inadequate both as to level and area covered.

c. Teletalk System

The teletalk system, as used by the Japanese Navy, is difficult to evaluate because it did not perform functions identical to the intercommunication system (circuit 18 MC) used in the U. S. Navy. The principal difference is that the intercommunication (U. S. Navy) provides for direct communication between any two stations on the system whereas the teletalk system provided for communication between each station and the master station at the discretion of the master station, and between stations if switching was accomplished at the master station. The intercommunication system as used in the U. S. Navy provides an amplifier at each station capable of driving the reproducers at all stations simultaneously at rated output level, and in addition provides for communication between all stations with selection control at each station.

The Japanese system provided one amplifier for the entire system. The Japanese system was much lighter in weight, much simpler and involved very much less wiring than the system currently in use by the U. S. Navy. It did not incorporate new principles of operation, new art, or new developments. Station selection was provided only at the master station and the system as a whole did not have the utility of the U. S. systems.

The major components of the system were as follows:

(1) Speaker-microphones (weatherdeck type)*

(2) Two selector switch boxes**

(3) One rotary selector switch**

(4) One amplifier

(5) Speaker microphones (indoor type)*

(Notes: *The number of each type of speaker-microphone varied, dependent on the ship and the location on the ship.

** In some cases, only one selector switch box was used. Under this condition no rotary selector switch was required.)

Figures 114, 115, and 116 show the circuit diagram for the 16 and 10 station systems, both with two selector switch boxes, and a 10 station system with one selector switch box.

The components of the system are described as follows:

Speaker-Microphone Unit-Weather Deck Type - Figure 117 is a photograph of this unit. It is a small folded horn type of speaker with junction box mounted on the bottom side. The talk switch is mounted in the junction box. The unit operates as both loudspeaker and microphone.

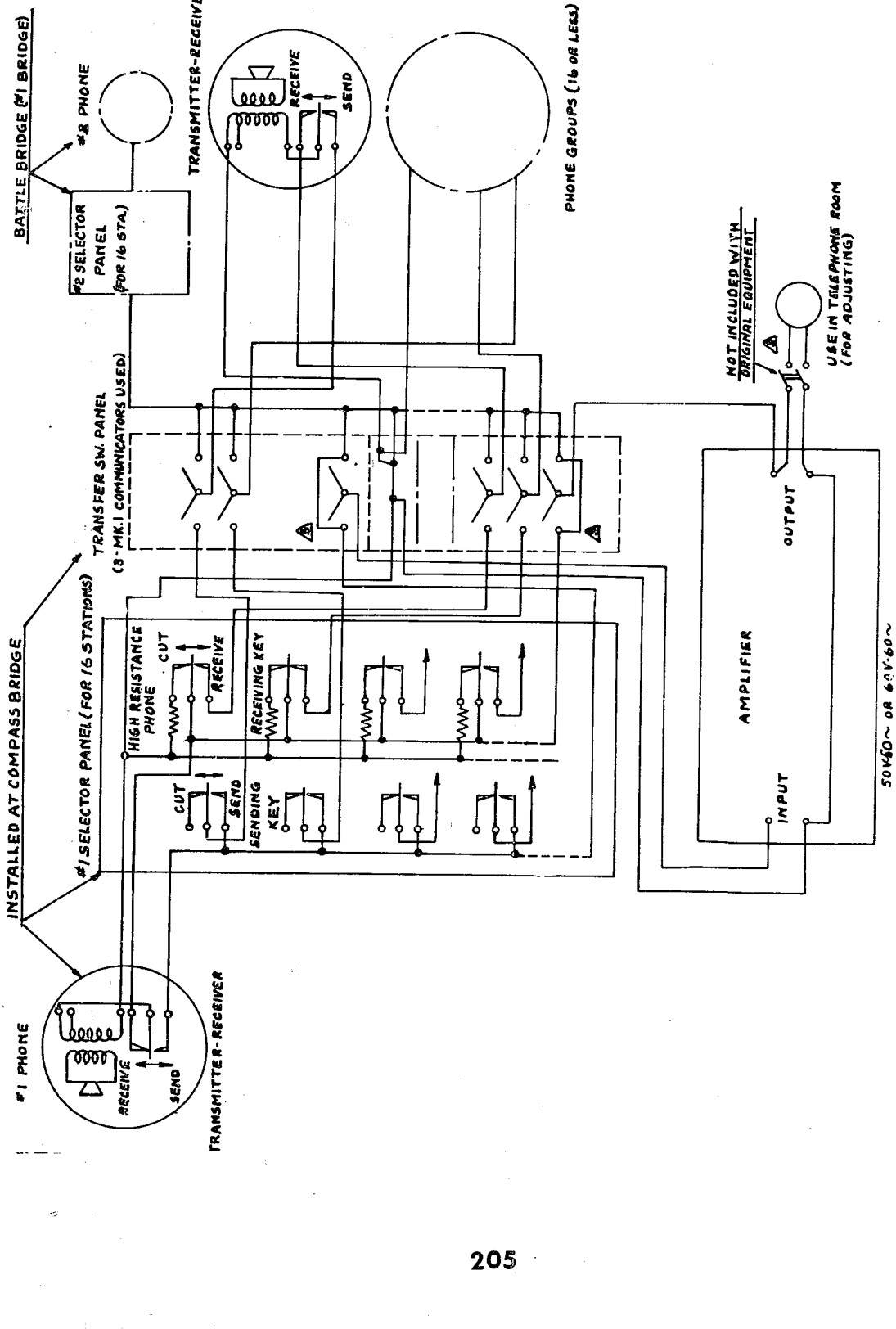

Figure 114
CIRCUIT DIAGRAM - 16 STATION TELETALK SYSTEM

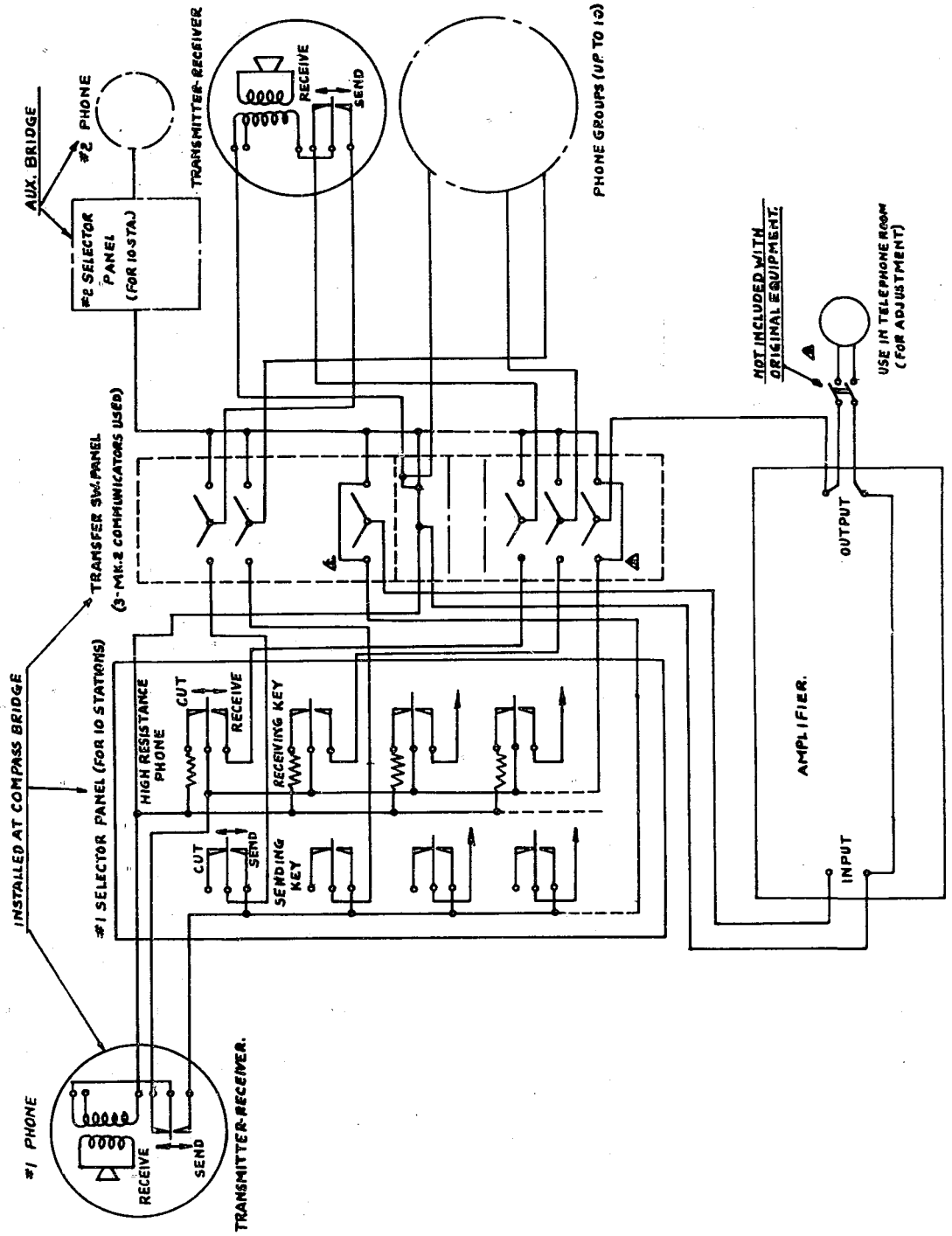

Figure 115
CIRCUIT DIAGRAM - 10 STATION TELETALK SYSTEM

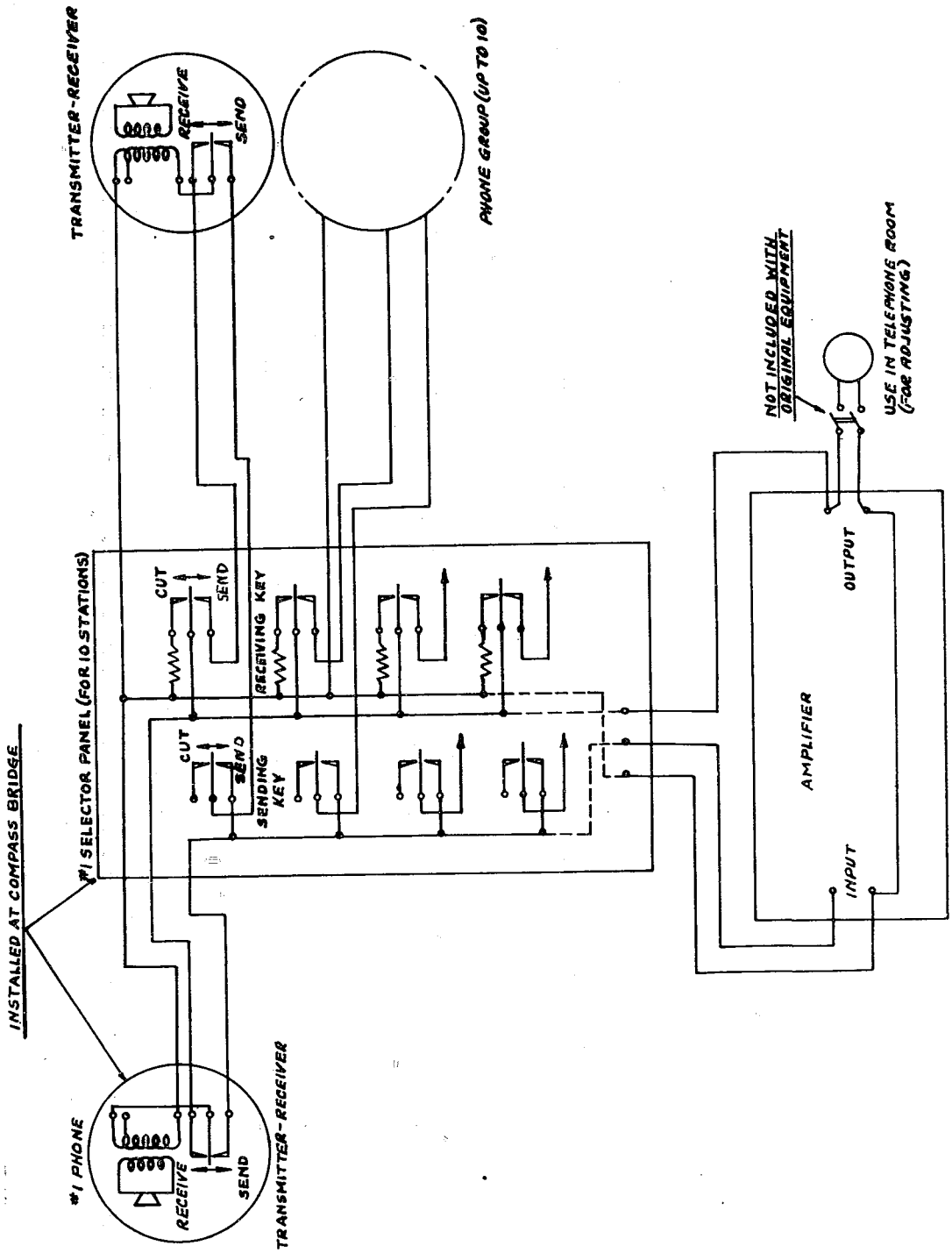

Figure 116
CIRCUIT DIAGRAM - 10 STATION TELETALK SYSTEM
(1 SELECTOR SWITCH BOX)

The speaker mechanism is a permanent magnet type utilizing a 3-inch molded phenol resin cone. The mechanism of this unit is identical to the mechanism for indoor units with the exception that the indoor unit has a paper cone. The manufacturer (Nihon Onkyo) had no information on sensitivity of the weather deck unit complete. Mechanism only, with 0.5 watt input produces five bars on axis at 1.5 meters at 400 cycles. Frequency response is reasonably flat: 500 to 2000 cycles, down 10 db at 400 and 3000. Impedance of cone is four ohms at 1000 cycles.

Selector Switch Box - Figure 118 is a photograph of this unit.

The purpose of this box is to select the station with which the master station wishes to communicate and to connect the receiving station to the amplifier for reply to the master station. There may be one or two master stations each equipped with a selector switch box. The selector switch box also contains loading resistors corresponding to each station on the system. Only one master station may operate at a time.

Rotary Selector Switch - This switch selects the master station which is to control the teletalk system. Normally the master stations were located on the upper and lower bridges and the rotary selector switch on the lower bridge.

Amplifier - One amplifier serves the complete system. It is designed to operate from a 50 volt, 50 cycle supply or a 60 volt, 60 cycle power supply. The tube complement is as follows:

1-606	1st stage
1-606	2nd stage
1-6L6A	3rd stage
1-5Z3	Rectifier

The amplifier is mounted in a steel case approximately 16" x 12" x 6" deep. Most of the components are accessible from doors on the front of the case.

Power input to amplifier is 80 watts and power output 8 watts with 10% distortion. Input impedance is 60 ohms and frequency response (using 1000 cycles or reference frequency) is 8 db at 8000 cycles. This response was measured across four ohms dummy load on output of amplifier.

The schematic diagram of the amplifier is given in Figure 119.

Speaker-Microphone-Indoor Type - This unit is comprised of a three inch permanent magnet cone type mechanism mounted in a wood case approximately 8" x 5" x 4" deep. This unit appeared to be of commercial design throughout. It was intended for use only in protected locations aboard ship. Sensitivity was not available for the complete unit. With 0.5 watt input to mechanism only, pressure output on axis is 6.2 bars at 1.5 meters at 400 cycles.

Circuit Operation - The principal feature to note concerning the operation of this system is that all station selection is done by the master station. All stations, other than the master station, can talk to the master station and only when the corresponding "Receive" key at the master station is in the "Receive" position. Station to station communication is possible if "Receive" keys for stations wishing to communicate are closed at the master station.

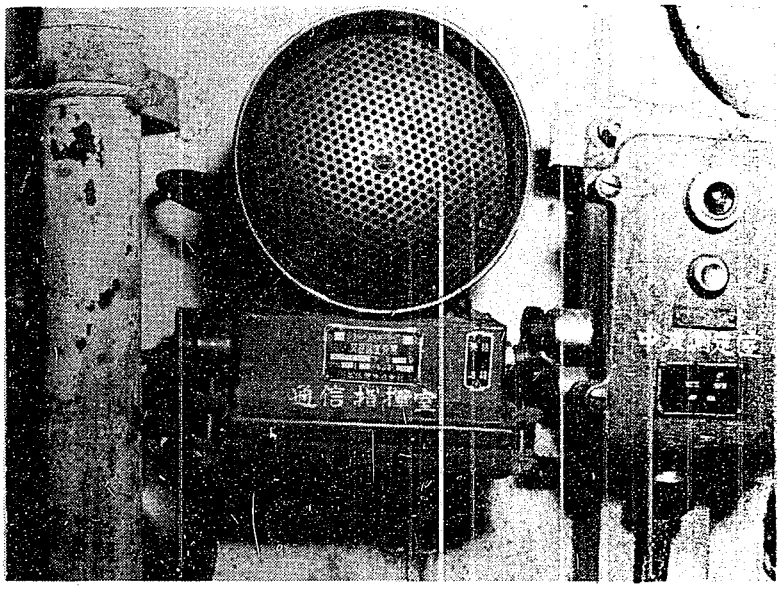

Figure 117
SPEAKER-MICROPHONE - WEATHERDECK TYPE

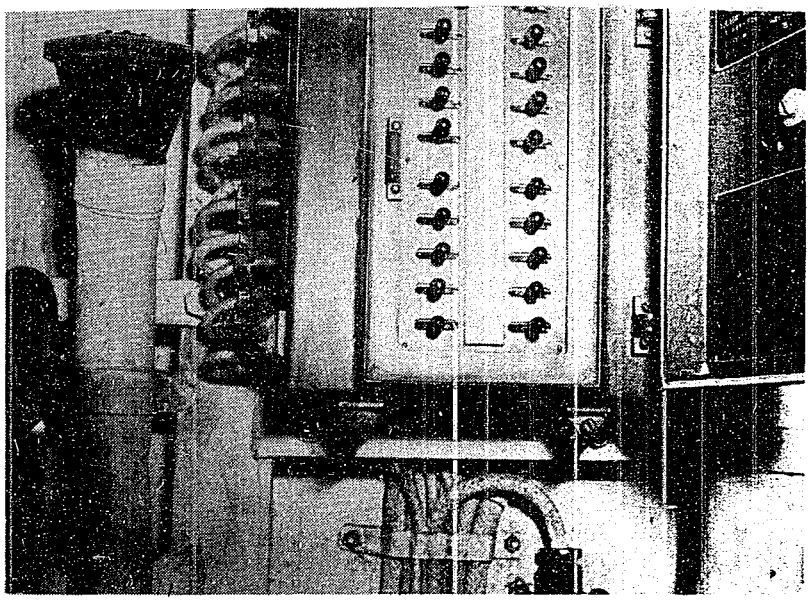

Figure 118
SELECTOR SWITCH BOX - TELETALK SYSTEM

Item	Rating
V1	UZ - 606
V2	UZ - 606
V3	UY - 807
V4	KX - 523
T1	-----
T2	-----
T3	100 KΩ
R1	3 KΩ
R2	1 MΩ
R3	200 KΩ
R4	50 KΩ
R5	2 KΩ
R6	50 KΩ
R7	20 KΩ
R8	250 KΩ
R9	250 Ω
R10	10 KΩ
R11	30 KΩ
R12	500 KΩ
P	0.5 μF
C1	0.1 μF
C2	2 μF
C3	0.1 μF
C4	0.5 μF
C5	0.5 μF
C6	0.1 μF
C7	0.002 μF
C8	4 μF
C9	4 μF
C10	0.001 μF
C11	2 μF x 4
C12	2 μF x 4
C13	0.1 μF
C14	-----
L	-----
PL	3λ
F	-----
S	-----
TB1	-----
TB2	-----
TB3	-----
TB4	-----
TB5	-----

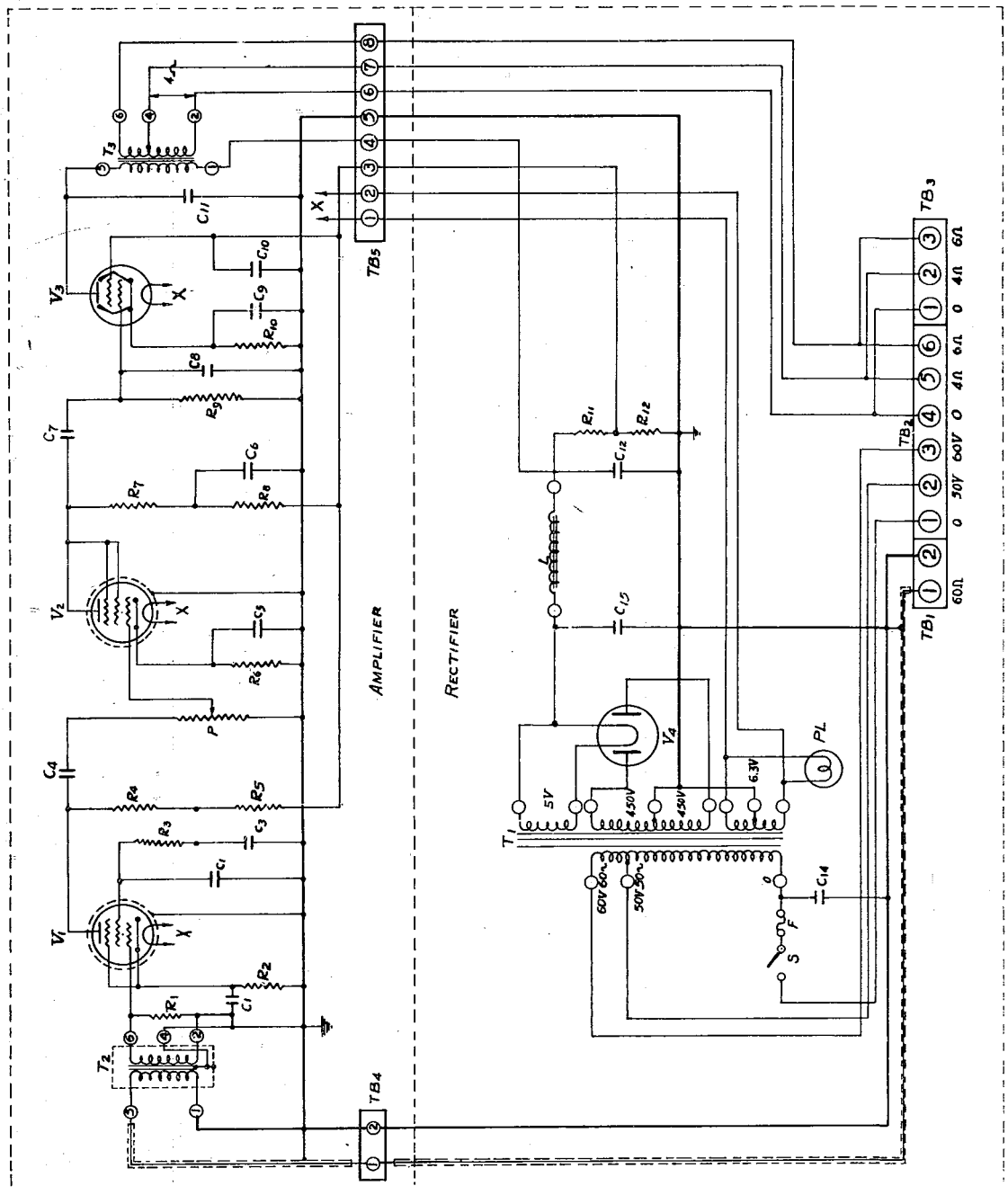

Figure 119
SCHEMATIC DIAGRAM - TELETALK SYSTEM

The system inspected was damaged and could not be placed in operation. As a result it was not possible to judge its performance. Samples of the equipment have been shipped to the Bureau of Ships.

d. Portable Announcing System

This system was intended as a small, low power, public address system for general utility use and primarily for the following specific applications.

(1) Emergency use when general defense system fails.

(2) Lecture purposes - educational.

(3) For addressing assembled crew.

Two types of systems were designed--Type A and Type B. The systems are similar, the principal difference being that the amplifier and rectifier were separate components in the Type A equipment and were a combined item in the Type B equipment. The combined amplifier was also made lighter.

The principal components of the systems were as follows:

(1) Two carbon microphones (Figure 120)

(2) One lapel microphone (WE 619A)

(3) One amplifier (Figure 121)

(4) One rectifier (Type A only - Figure 122)

(5) Two speakers (Type 4 - see general defense system)

Monitor Headset - The Type A equipment consisted of six pieces packed, less any spares. The Type B equipment consisted of five pieces packed.

The general design, tube complement and performance of the systems are shown in Figures 120, 121, 122, 123, 124, 125, 126, 127, and 128. The following information supplements that on the drawings.

(1) Type A equipment

Power source - 50, 60, 100 volts, and 50 or 60 cycles
Power input - 100 watts
Power output - 10 watts (8-10% destortion at 1000 cycles)
Gain - 95 db
Frequency response - 200 to 3000 cycles, ± 3 db

(2) Type B equipment

Power source - 50 and 100 volts, and 50 or 60 cycles
Power input - 80 watts
Power output - 10 watts (10% distortion at 1000 cycles)
Gaine - 85 to 90 db
Frequency response - 200 to 3000 cycles, ± 3 db

The manufacturer's engineers (Nippon Electric) reported that serious difficulties were encountered with carbon granules packing in the carbon microphones. (This difficulty became so serious when the same type of carbon microphone was used on the general defense system that the microphone had to be replaced with a moving coil type.) The portable carbon microphones used on this system operated satisfactorily only when held on a vertical position.

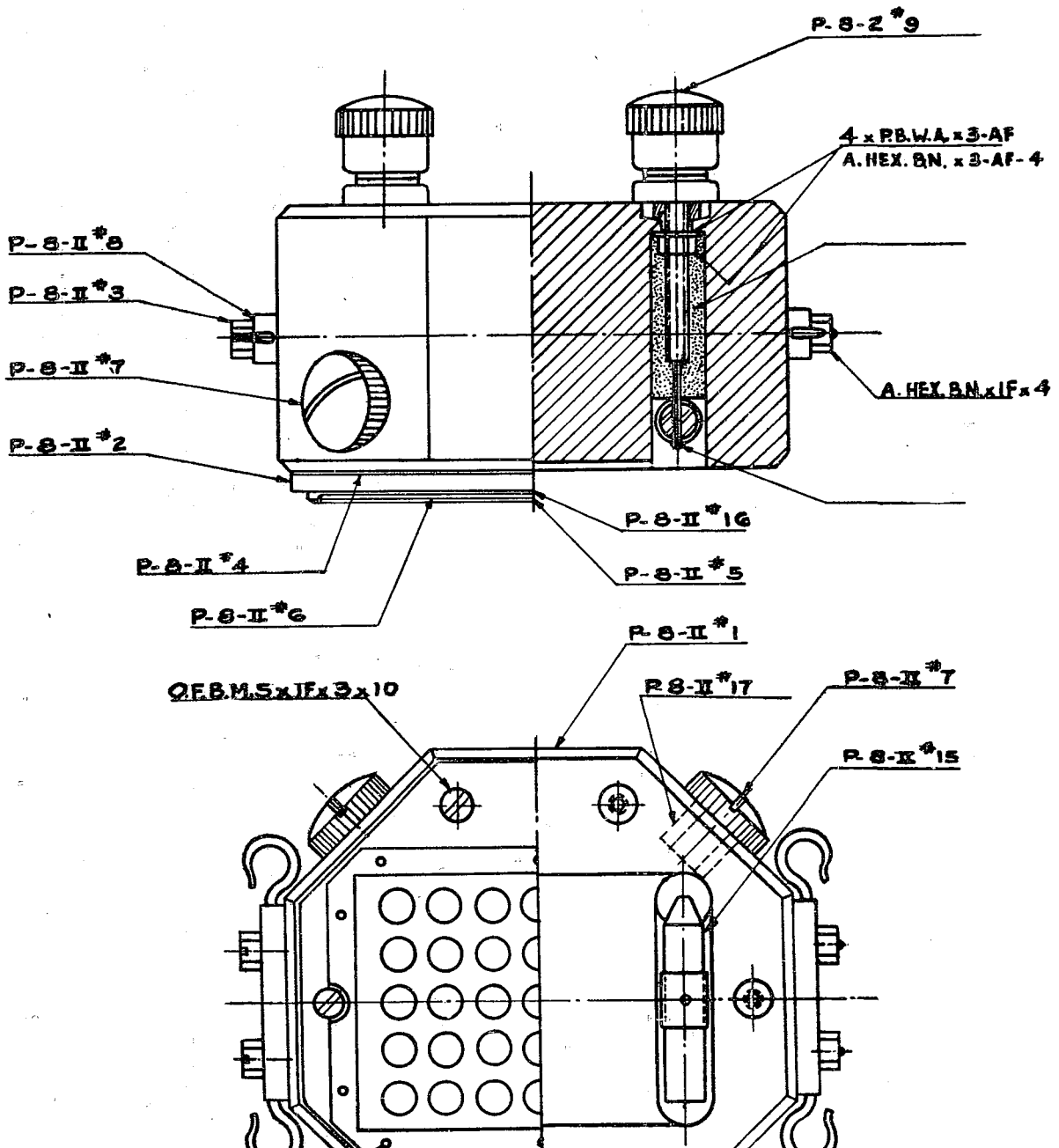

Figure 120
CARBON MICROPHONE - ASSEMBLY

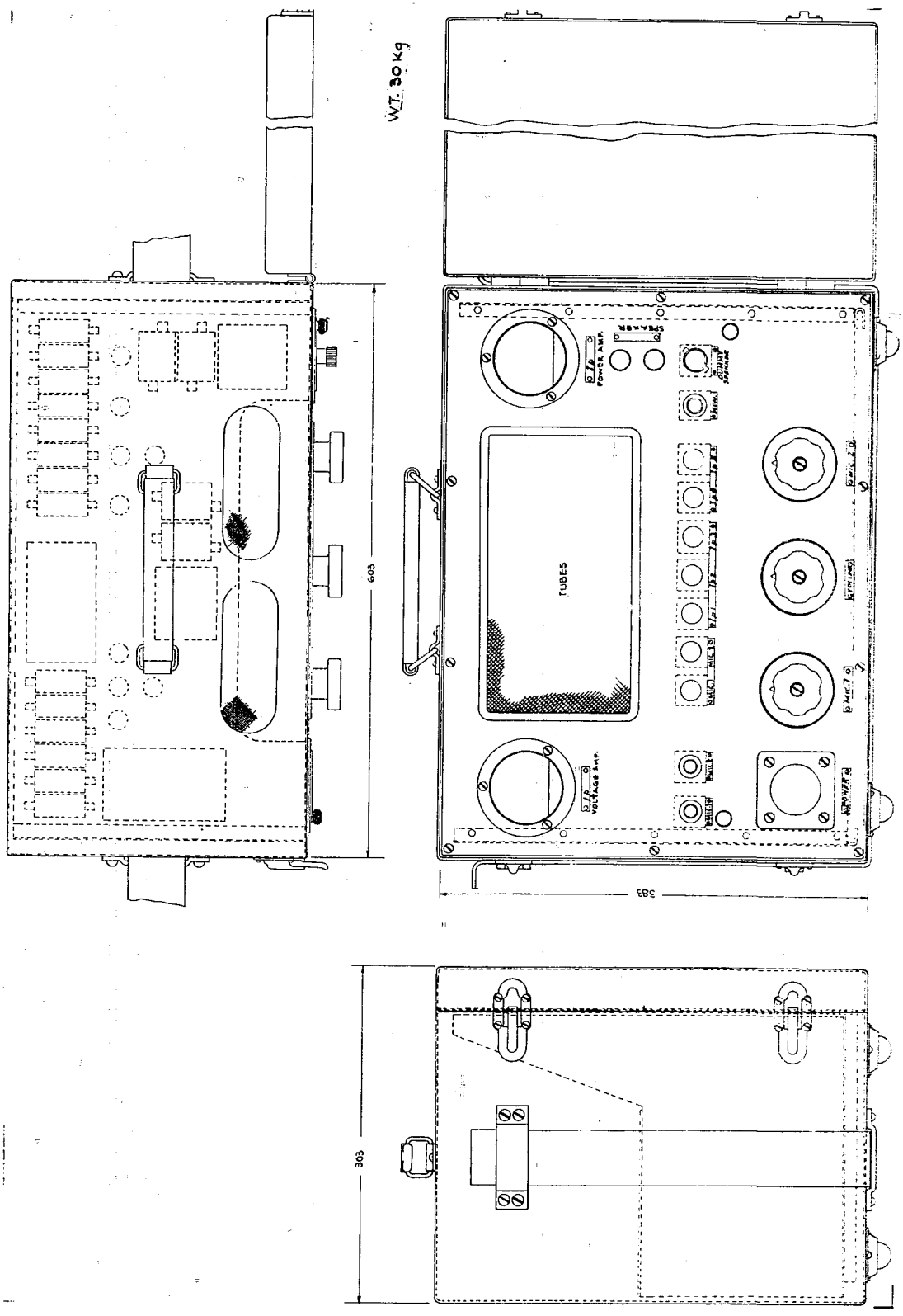

Figure 121
AMPLIFIER - TYPE A EQUIPMENT - ASSEMBLY

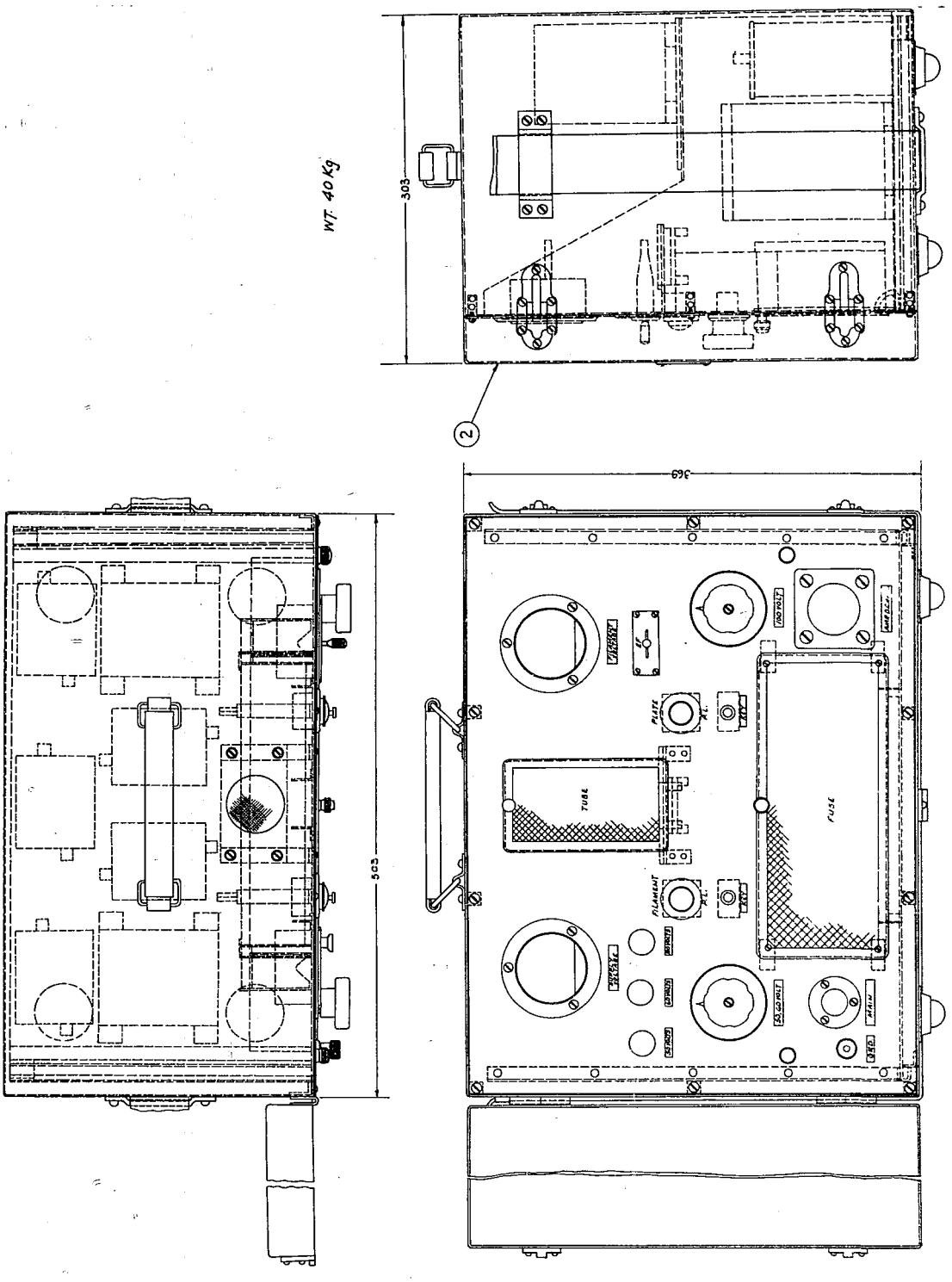
WT. 40 Kg
303
2
369
503
TUBE
FUSE
FUSE
FUS

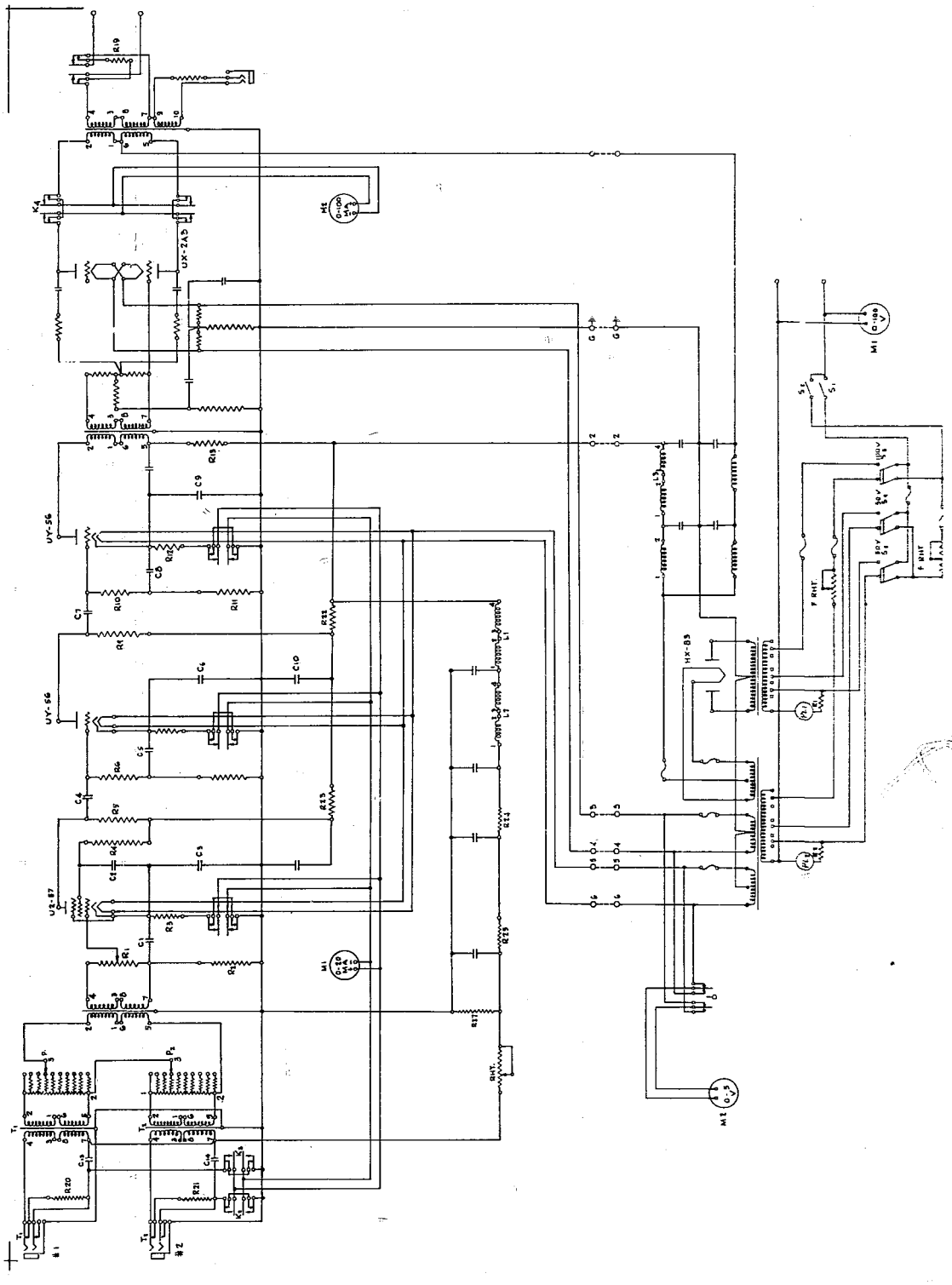

Figure 123
SCHEMATIC DIAGRAM - TYPE A EQUIPMENT

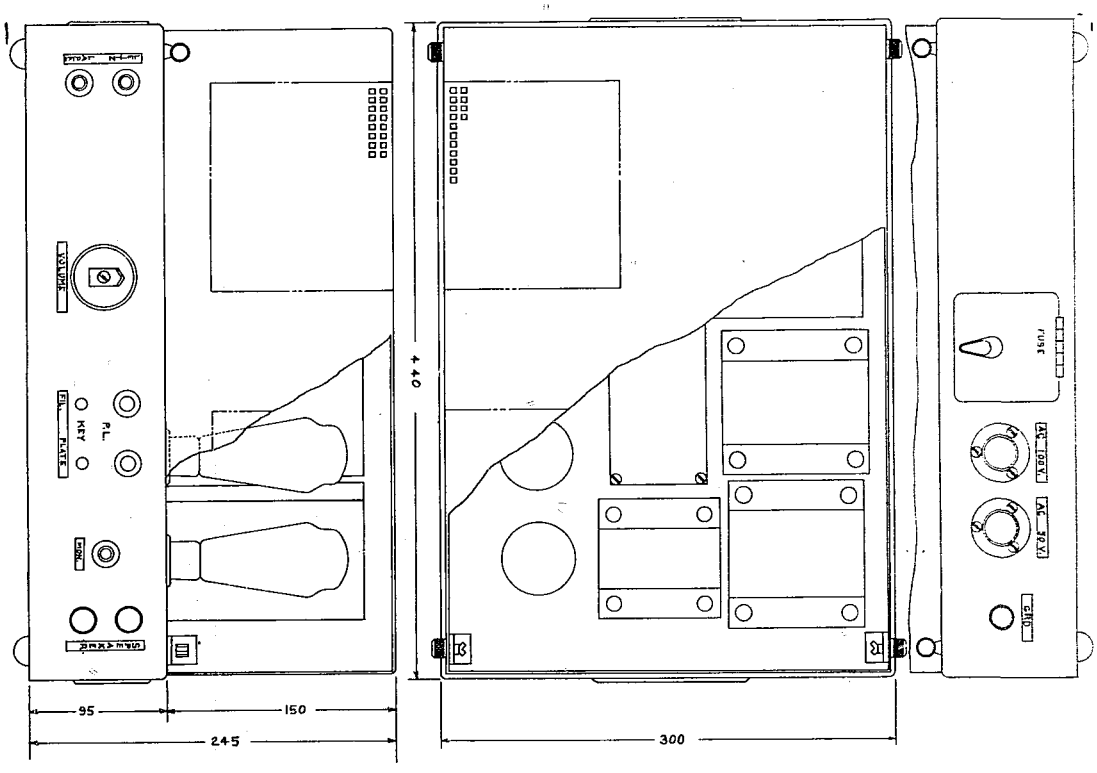

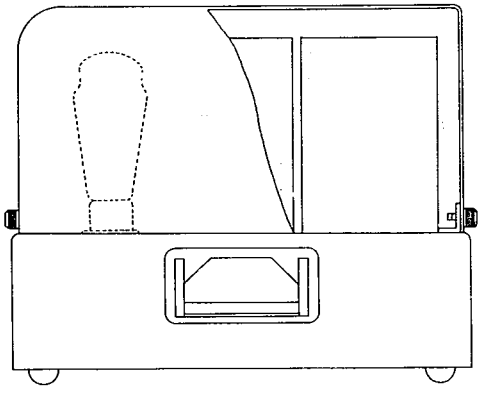

Figure 124
AMPLIFIER - TYPE B EQUIPMENT - ASSEMBLY

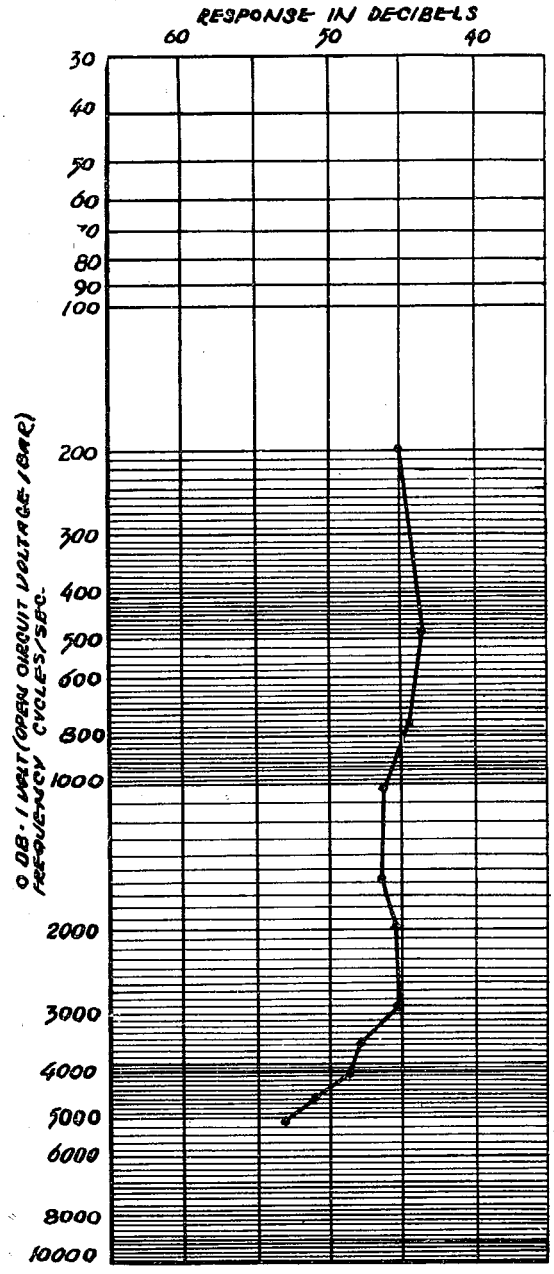

NOTE:
1. CALIBRATION PRESSURE CALIBRATION
2. RESISTANCE 750 OHMS
TERMINAL VOLT. 6 VOLTS
TERMINAL AMP. 8 MILLI-AMPERES.

Figure 125
FREQUENCY RESPONSE CURVE
PORTABLE CARBON MICROPHONE

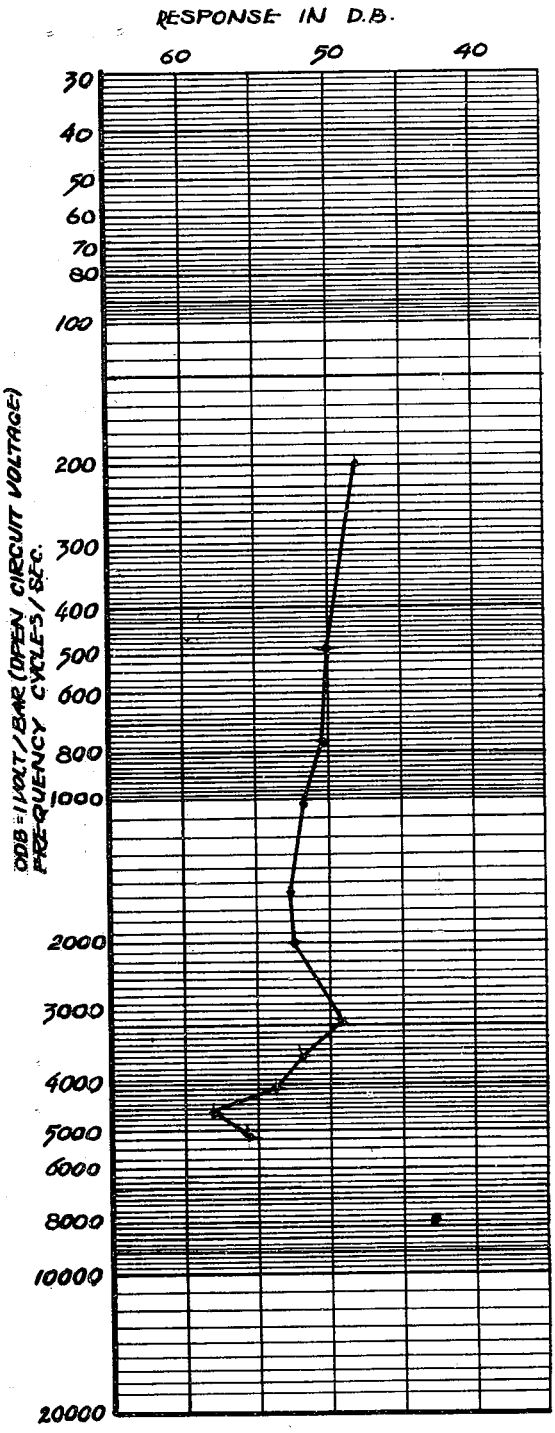

NOTE:
1. CALIBRATION PRESSURE
2. RESISTANCE 400 OHMS
TERMINAL VOLTAGE OF MICROPHONE
6 VOLT

MICROPHONE CURRENT
5 MILLIAMPERES

Figure 126
FREQUENCY RESPONSE CURVE
LAPEL CARBON MICROPHONE

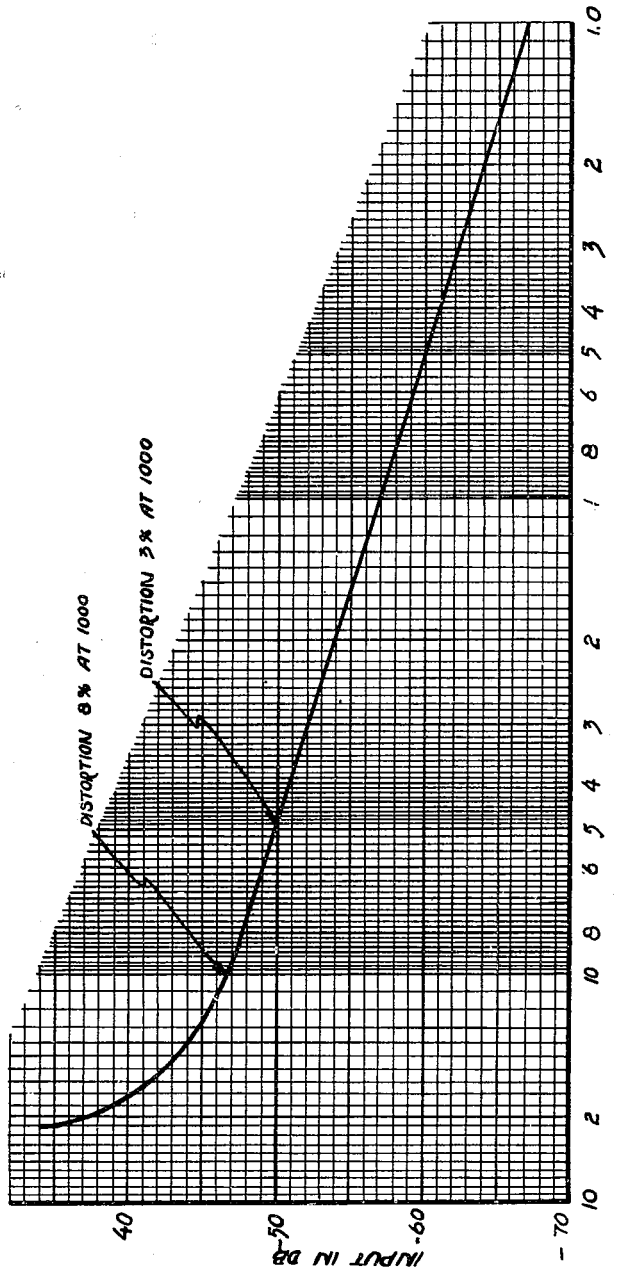

Figure 127
LOAD CURVE - TYPE A AMPLIFIER

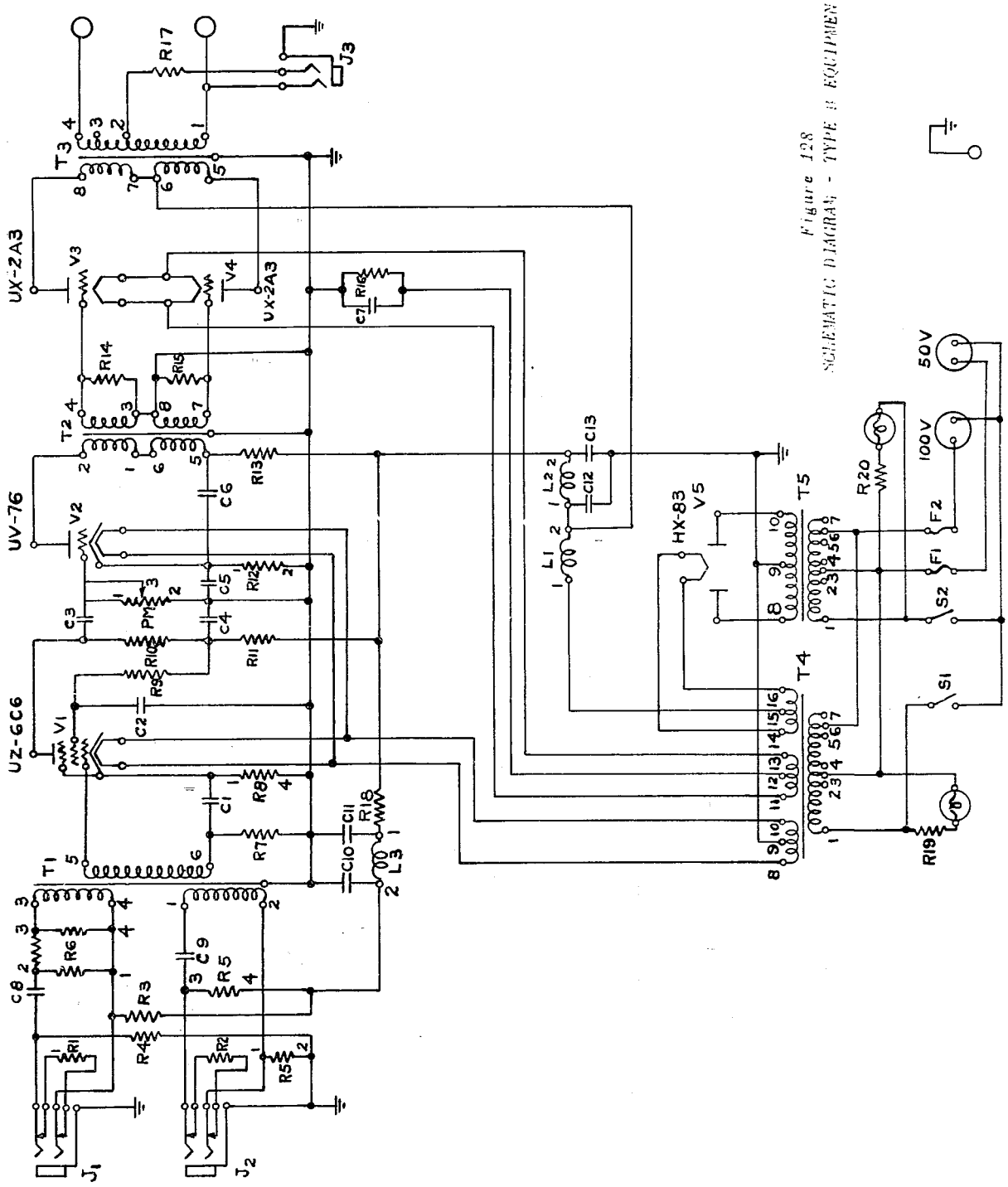

Figure 128
SCHEMATIC DIAGRAM - TYPE II EQUIPMENT

The systems as a whole were large and heavy for their quality and output rating.

3. Telephones

The telephone equipment in use aboard Japanese naval vessels was, in general, well constructed and provided satisfactory communication within the limits of the distribution and connecting circuits used. As compared with U. S. Navy standards of design and development, the Japanese equipment was about fifteen years old.

Both battery and sound powered types were used, the battery type comprising the major portion of the equipment. The sound powered type was comparatively new in development, having been in use only since 1943.

a. Battery Telephones (See NavTechJap Documents No. ND22-2015 - "Plug Exchange - 35 Line - Instruction Manual" and No. ND22-2016 - "Battery Type Telephones - Instruction Manual - Relay and Special Exchange".)

This type telephone comprised the main communication equipment in Japanese naval vessels. These telephones consisted of a single button, carbon granule type transmitter and a magnetic receiver, incorporating a bipolar magnet and diaphragm.

The telephone sets are of three types: combination handsets, portable breast transmitter and head phones, and table model. In noisy locations the handset is provided with an auxilliary receiver for the other ear. The handset and portable types each have an associated terminal box containing a signal lamp and stowage clamp. The stowage clamp operates a transfer switch (transmission to signal circuit) when the telephone is in place. An externally mounted buzzer provided an audible signal. Signal current is supplied from a 20 volt storage battery through a vibrator.

Three types of connecting circuits are used: direct line, special exchange and plug exchange. The direct line connection is made through a relay box between two stations or between one master station and two or three multiple stations. The relay box contains the relays, for setting up the signal and transmission circuits, and the vibrators for ringing current. Regular and emergency vibrators are provided, with a transfer switch for changeover. The setting up of the transmission and signal circuits is automatic with the removal of the telephones from the stowage clamps.

The special exchange connection is made through a switch box, from a master phone to two, three or four stations. This switch box contains the relays and vibrators, similar to the relay box, and lever type switches for selecting the desired station. The switches have three positions; signal, talk and normal. These switch boxes normally were used for communication between the master phone and stations, although the stations could communicate by calling the master phone and having the necessary signal and communication circuits set up. These switch boxes are also made with eight switches for use with two master phones so that various combinations of the four stations can be set up for either master for simultaneous communication.

The plug exchange is a manually operated plug and jack switchboard. These switchboards are made in two standard sizes: 60 line and 35 line. Where more than 60 lines are required, two or more switchboards are installed, each one operating as an independent unit. The 35 line size was used as a damage control switchboard. These switchboards are ruggedly constructed but are excessive in size.

They contain the jack, lamp and relay for each line made up into a separate unit on the front of the board. This accounts for the small number of lines per switchboard. A common buzzer signal is provided for each switchboard so that, by varying the tone of the buzzers, the attendant can distinguish between them. In action an attendant was stationed at each switchboard. Special multiple cords of four, six and eight were used to make set-ups for battle or ship control stations during action. Multiplying more than four stations does not work satisfactorily as the transmission level becomes low. The six and eight station multiple was only used for emergencies. Ringing current is supplied by a 20 volt storage battery through a vibrator. Regular and emergency vibrators are provided, with a transfer switch on the key board. A cord testing jack with a buzzer signal is also provided on the front panel of the switchboard.

b. Sound Powered Telephones (See NavTechJap Document No. ND22-2014, "Sound Powered Telephone Instruction Manual".)

Sound powered telephones were a comparatively new development in the Japanese Navy. Manufacture of these units was started in 1943. Approximately 5000 units were made and, although instructions had been issued to the navy yards to install them on all types of vessels, the installation program while being set up, had not preceeded on schedule, due to a lack of adequate manufacturing facilities. Of those installed, the majority were direct line circuits from bridge to engine room, bridge to fire control, engine room to steering engine engine room, etc. Portable systems also were used to replace damaged battle telephone circuits. In some of the later ships, sound powered telephones were used to replace the damage control switchboard circuits.

The telephones are made in two types: handsets and breast transmitter and head phones. The handsets are made with both metal and semi-soft molded rubber cases. For use in noisy locations the handsets are provided with an auxilliary receiver for the other ear. Each of the above types is associated with a ringer box which contains a signal lamp, small loudspeaker for audible signals, and a hand generator. The loudspeaker consists of a sound powered telephone receiver unit coupled to a small horn which projects the sound through an opening in the box cover. The hand generator is of the inductor type and generates an 800 cycle note at optimum speed. A switch, operated by the crank shaft of the generator, cuts the generator in and out of circuit when the handle is operated and released.

Two types of connecting circuits are used with the sound powered telephones: direct line and special exchange. On the direct line connection the signal circuit is closed through the stowage clamp switch when the telephone is in place, and the hand generator operates both the lamp and loudspeaker at the called station. Removing the telephone from the stowage clamp closes the communication circuit. The special exchange connection is much the same as that used with the battery telephones except that no relays or vibrators are used. The switches close the signal and communication circuits and the signals are operated by the hand generator in the ringer box.

Only one fundamental design of sound powered telephone was used. The equipment was designed and developed by the Oki Electric Company and was approved on the basis of about two months service test aboard a carrier. The equipment was manufactured by the Oki Electric Company and the Sumitomo Electric Company from plans prepared by the Oki Electric Company. The units are basically similar to and combine design features of early model R.C.A. and Control Instrument Company units. The transmitter and receiver units are practically identical,

the only difference being in the number and location of holes in the diaphragm cover plate. The size and location of these holes was the only method used to provide gun blast protection. The arrangement of these holes was determined by test with a gun crew where the units were about ten feet back of the muzzle of a 12cm gun. No specifications on gun blast or salt spray resistance were ever required by the Japanese Navy. The units were designed for operation at atmospheric pressure and no provision was made for pressure equalization. About one per cent of the units manufactured were tested for shock and vibration resistance. The shock test consisted of 10 blows with a 20 kilogram hammer, dropped from a distance of one meter, against a spring mounted panel of the shock machine (Figures 129, 130, 131, 132, 133, and 134). For vibration test the telephones were vibrated at a frequency of 1000 cycles per minute at an amplitude of three millimeters for a period of one hour.

The sensitivity of these units, transmitter to receiver, ratio of acoustic pressure input to acoustic pressure output, is 15 bars input to 30 db output where 0 ib equals one bar. This test was made on an artificial mouth set-up using a special coupling chamber (Figures 135, 136, 137, and 138).

The loudspeaker unit used for test is of the dynamic type with a diaphragm of the diameter and shape shown in Figure 138. The details of the throat are shown in Figure 136. An octagonal nut is threaded to the top plate of the speaker unit. Eight round tubes of 10mm inside diameter connect this nut to a coupling chamber of 30cc volume as shown in Figure 136. The standard microphone is placed against one end of the coupling chamber and the microphone under test is placed against the other end. The standard microphone acts as an automatic volume (pressure) control to maintain a constant pressure in the coupling chamber. Details of the diaphragm end of the standard microphone are shown in Figure 137. The diaphragm is silk, impregnated with phenol resin. The exposed surface is plated with gold. In this test set-up the frequency range of 50 to 5000 cycles is scanned in one minute. The frequency response data of the units, transmitter and receiver, are shown on the curve in Figure 139. An articulation of 60 to 70 per cent was obtained in a noise level of 40 phons and about 40 to 50 per cent in a noise level of 90 phons. These tests were made in the machine shop of the Oki Electric Company plant. A chart of the articulation test syllables is shown in Table X.

The magnetic material used in these S.P. units is an alloy-nickel 80.8%, aluminum 18.0%, iron 1.2%. The pole pieces are 2.0% silicon steel. The armature is of the cantilever type. The armature and pole pieces were heat treated to 860°C and allowed to cool slowly in air over a period of two hours. The diaphragm is of Dural - copper, 2 to 4.5% magnesium, .4 to 1.8% manganese, .4 to 1% aluminum remainder.

The diaphragm is .07 millimeters thick and is protected against corrosion by "ARUMAITO" treatment (Alemite), an electrolytic treatment in an acid bath (electroplating). All other parts are treated with lacquer (for brass parts) or cadmium plating (for pole pieces). The corrosion resistance was checked only by actual exposure in use aboard ship for several months. The drive rod is brass, threaded at one end to attach to the dural diaphragm by means of a brass nut on both sides.

The molded rubber handsets have a stiffener molded into the grip section, thus providing rigidity while maintaining the cushioning effect for the units and eliminating breakage of the handset case. The units are held in by clamps screwed to inserts in the rubber case.

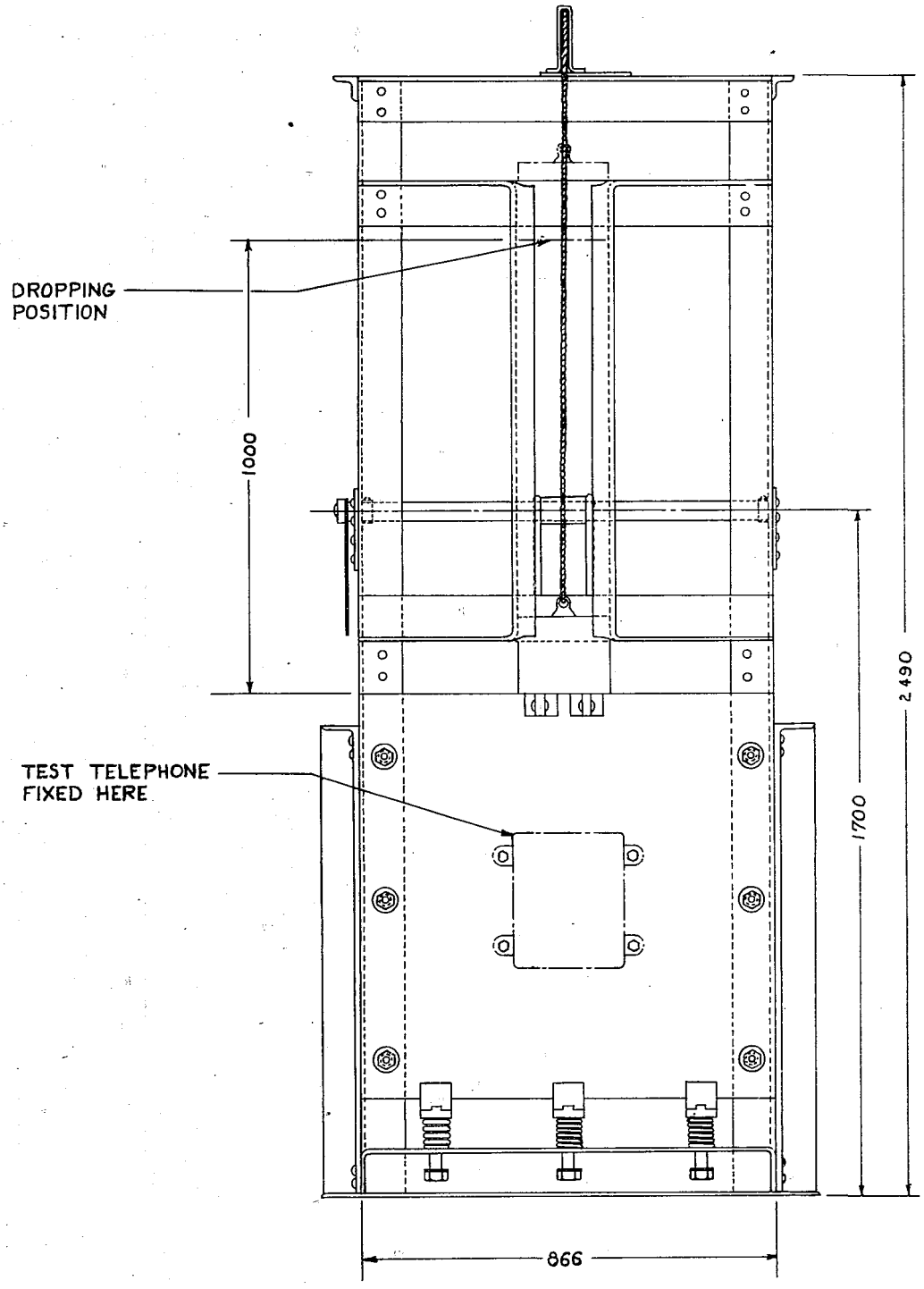

Figure 129
SHOCK TEST MACHINE - FRONT ELEVATION

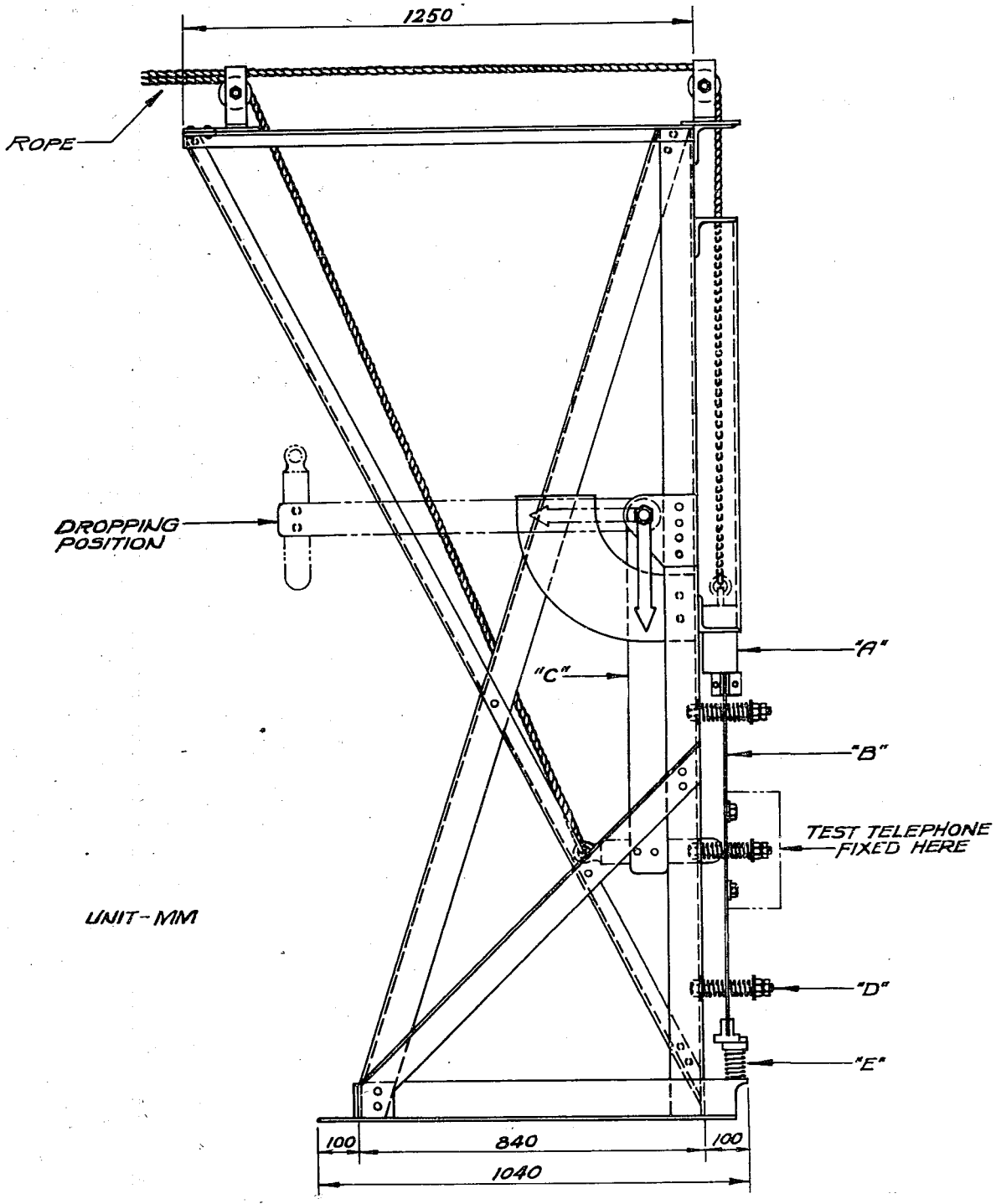

Figure 130
SHOCK TEST MACHINE - SIDE ELEVATION

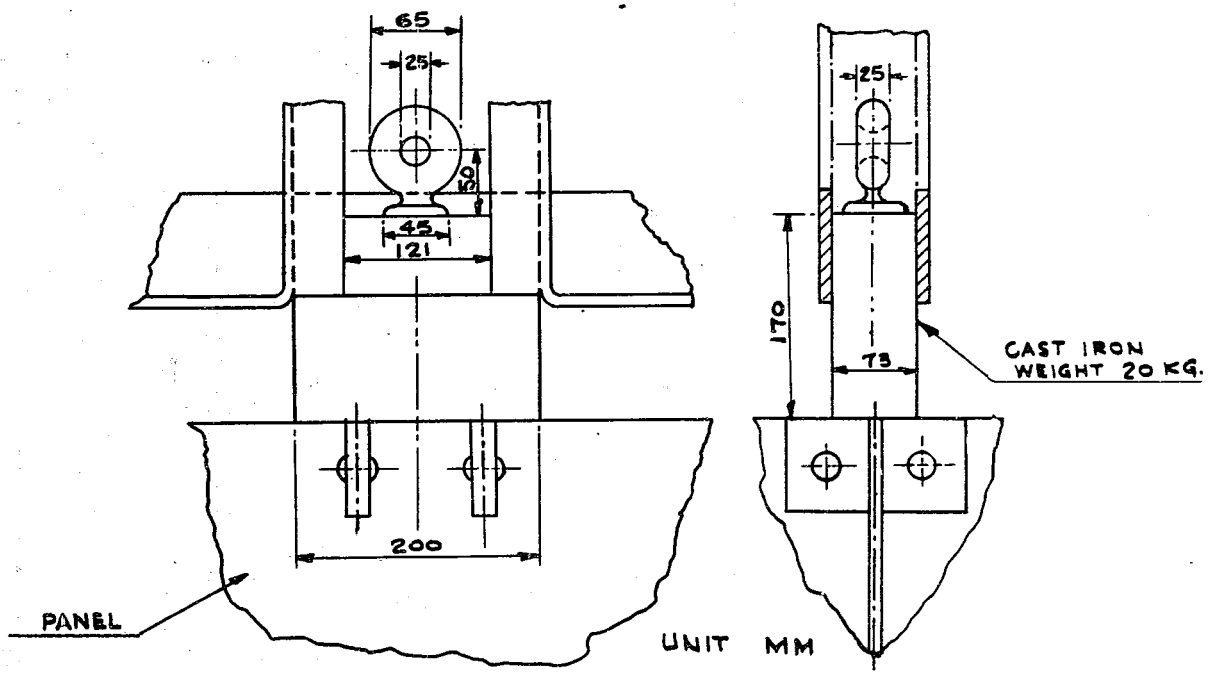

Figure 131
SHOCK TEST MACHINE - DETAIL A

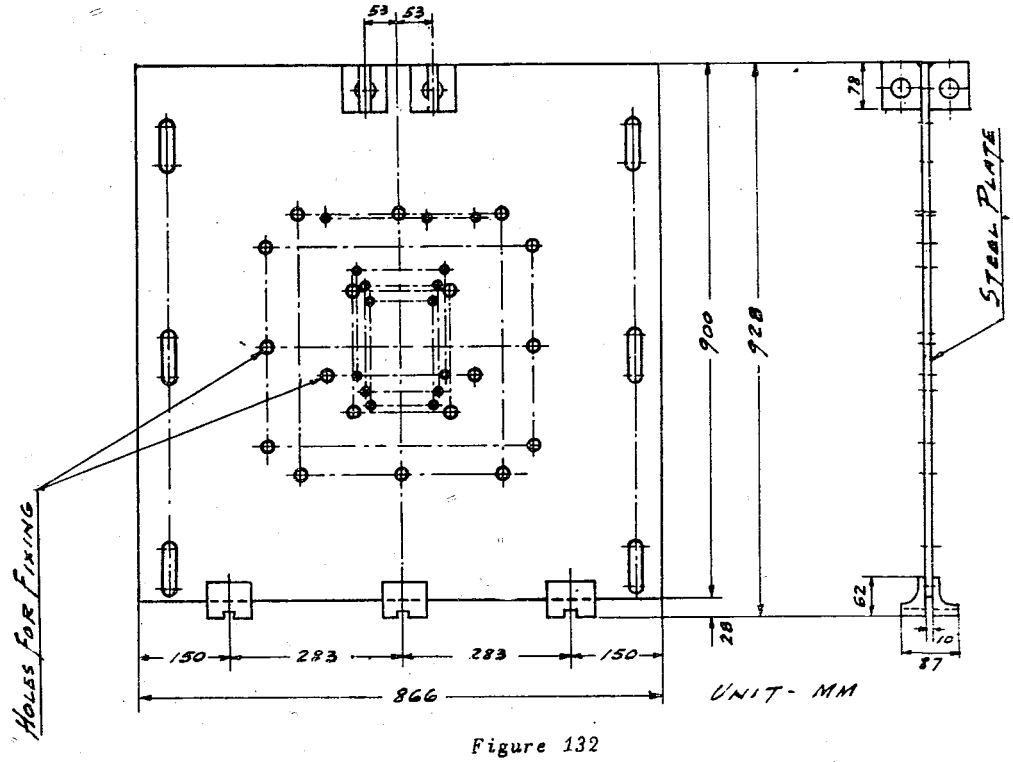

Figure 132
SHOCK TEST MACHINE - DETAIL B

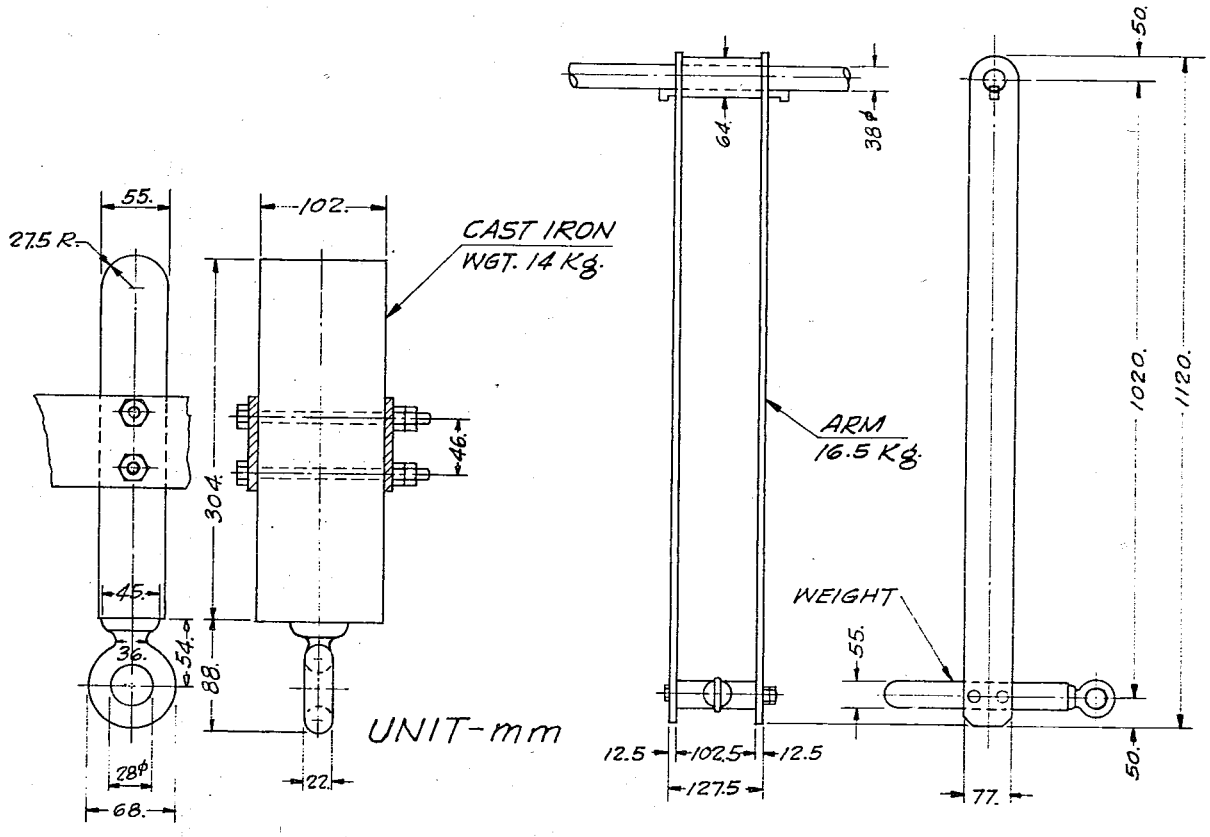

Figure 133
SHOCK TEST MACHINE - DETAIL C

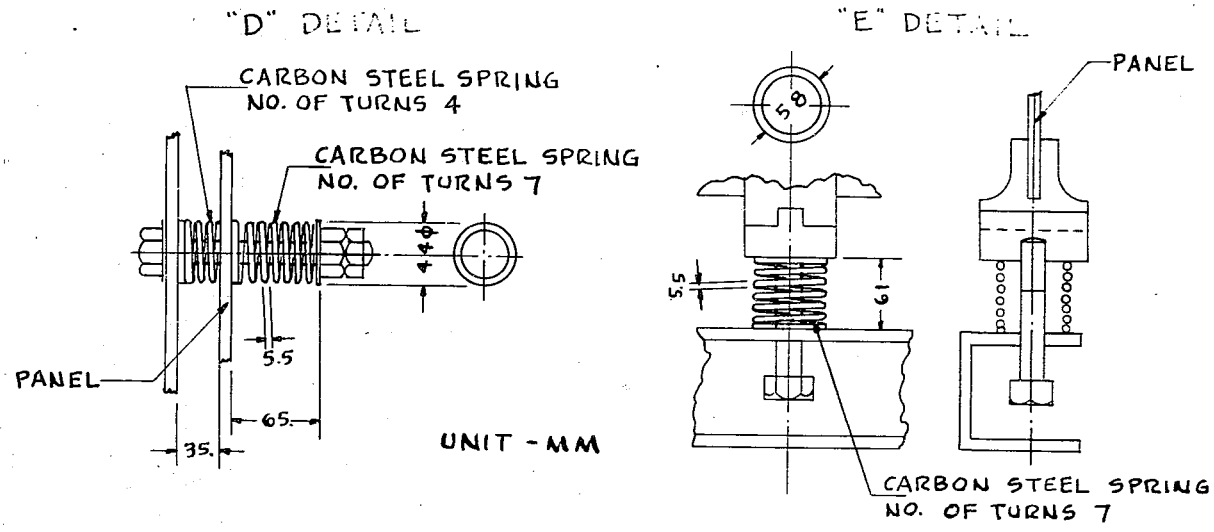

Figure 134
SHOCK TEST MACHINE - DETAILS D AND E

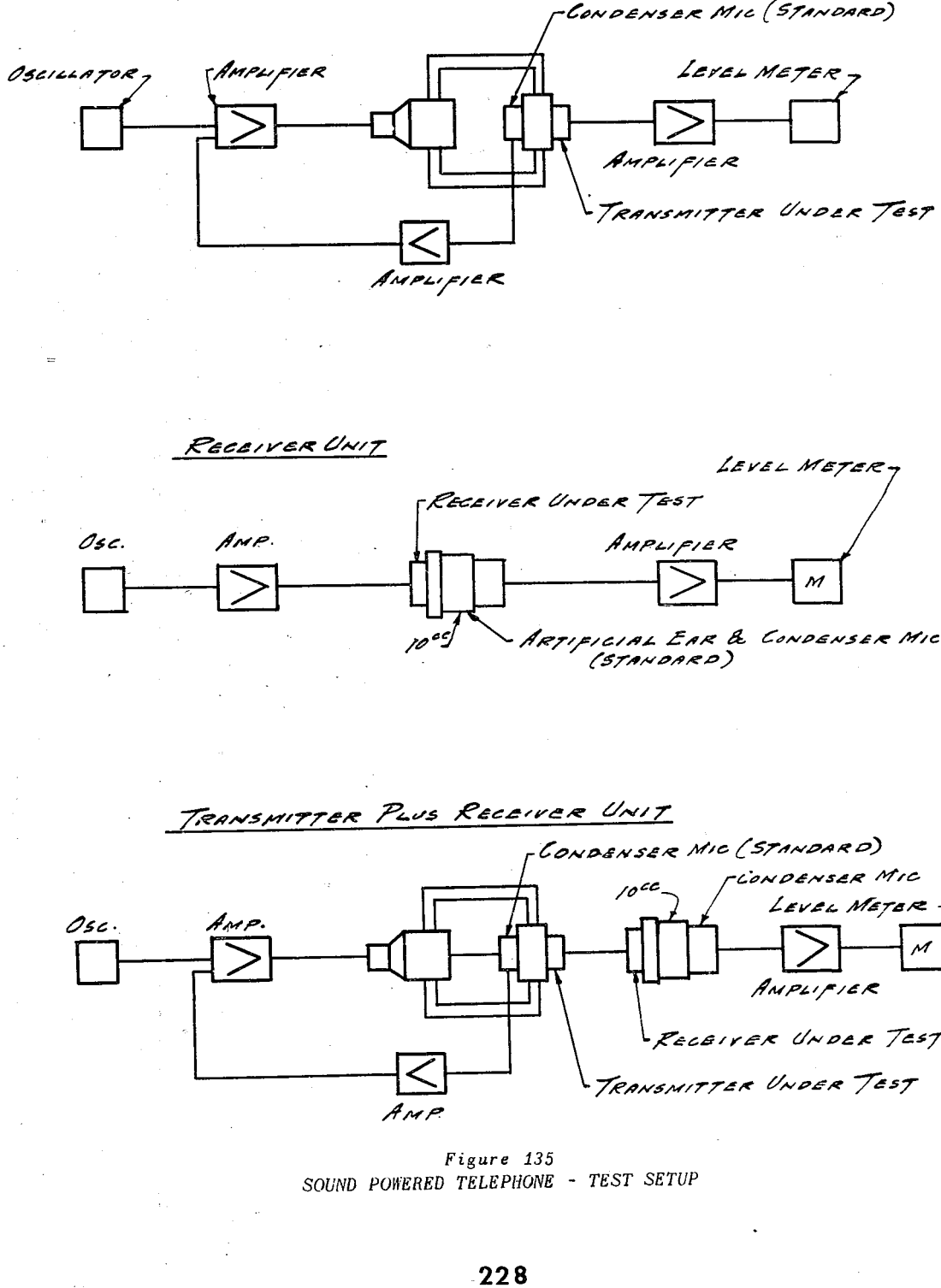

Figure 135
SOUND POWERED TELEPHONE - TEST SETUP

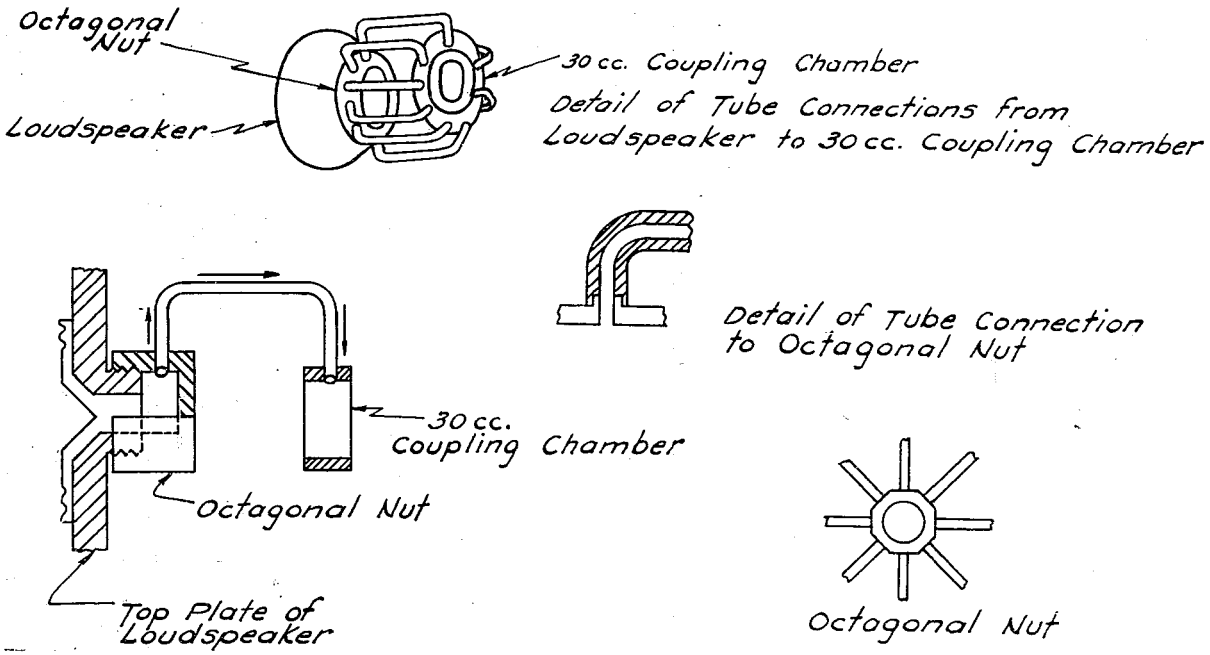

Figure 136
DETAILS OF ARTIFICIAL MOUTH
AND COUPLING CHAMBER

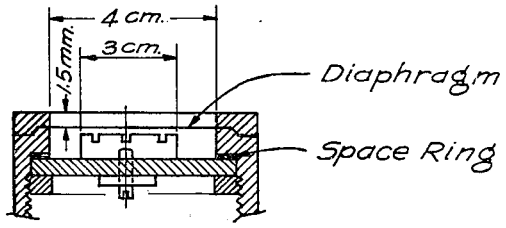

Figure 137
DETAILS OF STANDARD MICROPHONE -
DIAPHRAGM

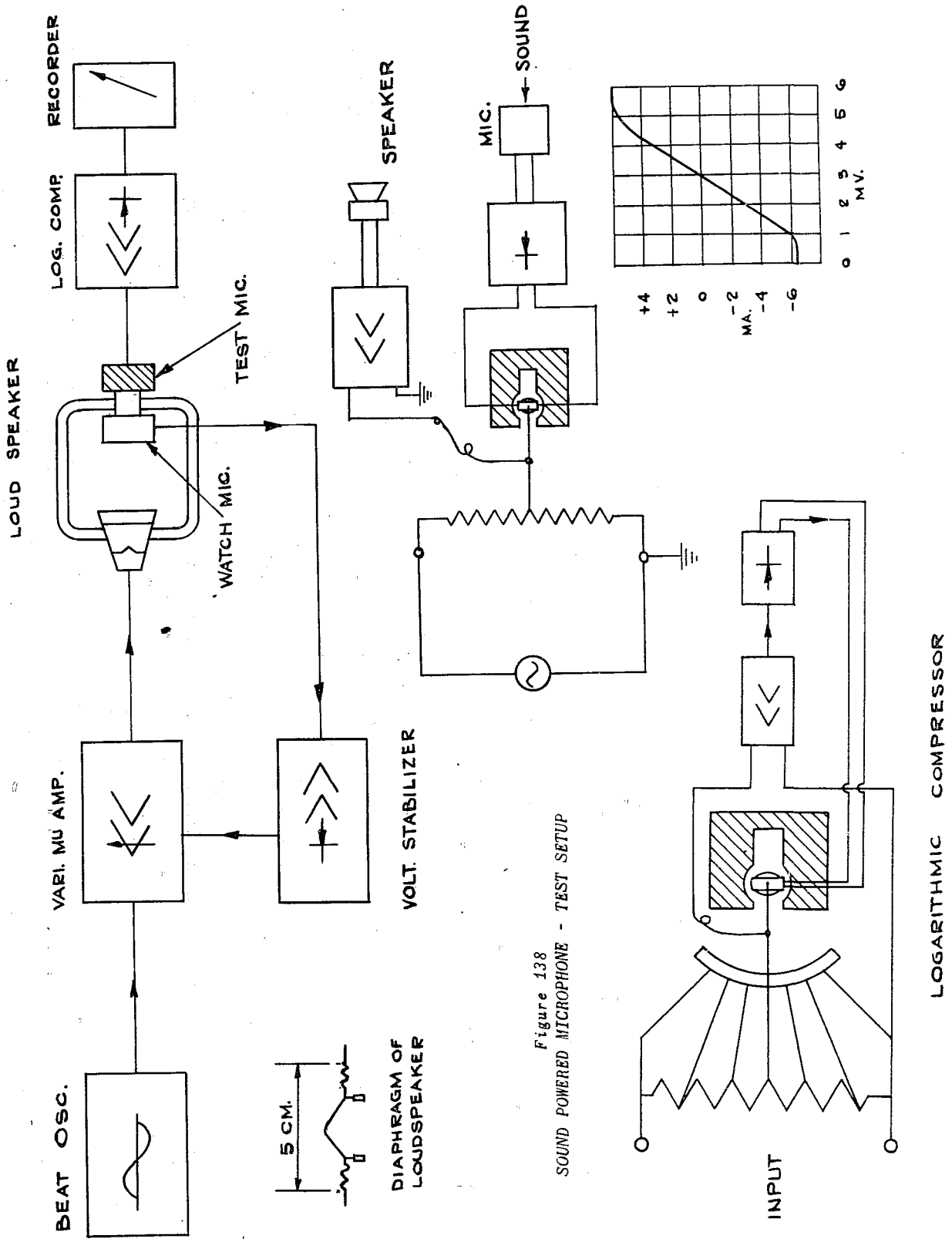

Figure 138
SOUND POWERED MICROPHONE - TEST SETUP

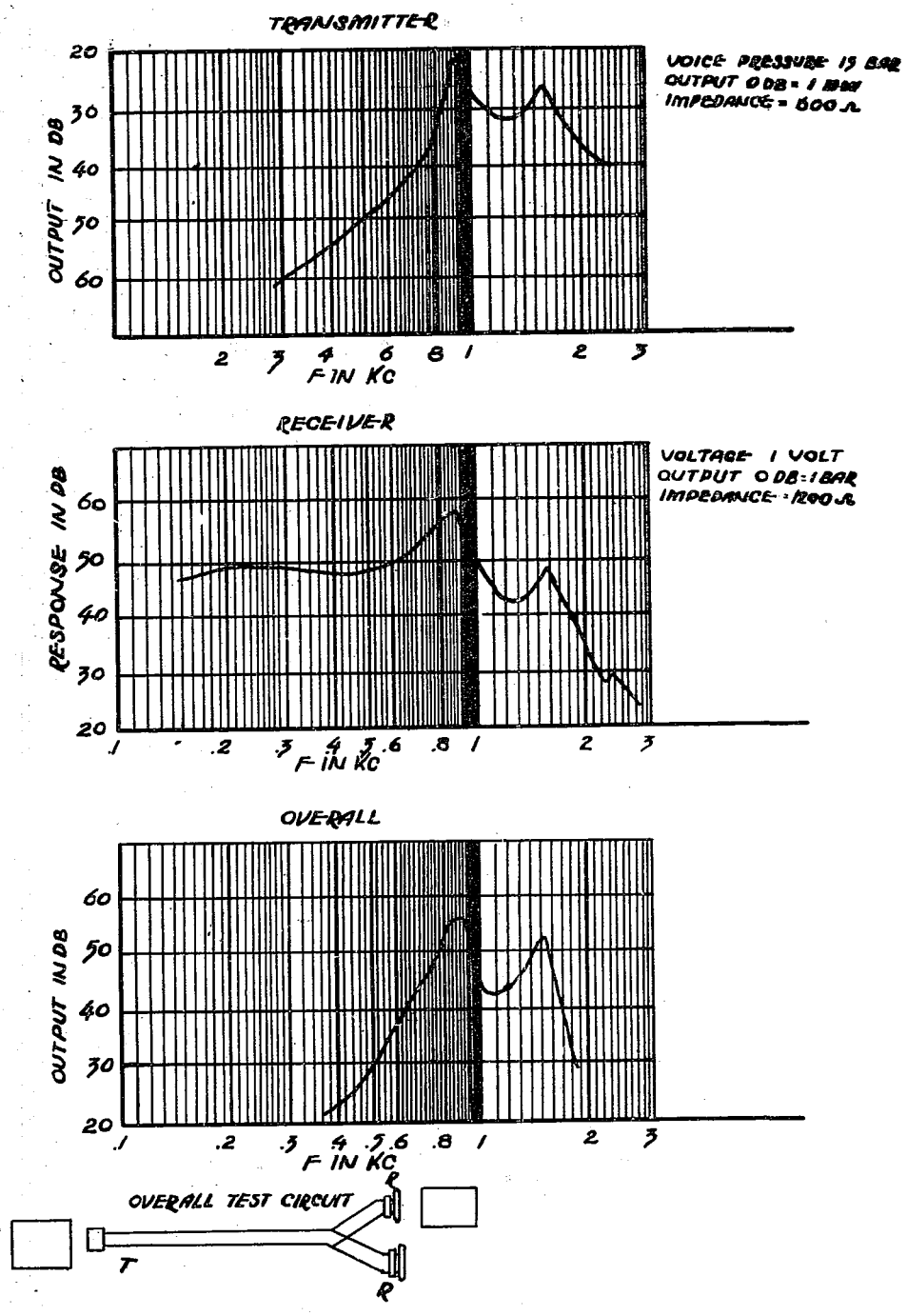

Figure 139
FREQUENCY RESPONSE CURVES
SOUND POWERED TRANSMITTER AND RECEIVER

Table X
LIST OF ARTICULATION TEST SYLLABLES

	1	2	3	4	5
1	SU RO	BI YA CHA	NA WA	JŪ ME	YUCHI
2	DA RI YO	RA NO	MI YO TO	KYOGUN	KE SU
3	SA PE	BOTTSU	YO SHOHYA	JA KKO	PIYOSHO
4	GI TA	E HI	CHA DA	BE ZE N	FU N MA
5	NI YA ZO	NE U	KI I	TO NI	U KO
6	RI YO KO	RU JI	TATTI	MAKKE	NU NE
7	E NI	NA N JYO	TSU MIN	UNHYU	I KU
8	O SHI	JI YO TSUSA	KU I	NI GI	RI GU
9	MI DE	MO BO	GI YA NU	SO MU	SE U
10	TO E	BS ON	GO RA	NE SO	HAPPE
11	UKKI	RU YA	GU MI	PI YO I	O MO
12	NYU MEN	HI YO TSU	NI Ū	KO JIYŪ	MI YA RI
13	IPPI	NO NA	E N BI	TO KI YO	RI KA
14	KI N DE	NU SU	NA CHIN	SE ZE	BANSO N
15	CHIKU	ME SA	YA HO	JI YA JO	ZO BU N
16	MA I	ME YO	RA TI YŪ (CHŪ)	RO E	BI SU
17	A DO	OHE	TO	TO TO N	MUPPO
18	CHO SHO	RI YO SHI	DE N PI	KU RU	KONSA
19	USOJA	WA TSU SO	BI YU NO	BO BE	SO YA WA
20	PU JI	KA RE N	CHA BI N	KI MO	SO MA
21	AN NI N	SHIN AI	SUPPU	BUZO	GOCHI
22	PE NE	ME MU	KIYARO	TO YO BO	GI YO DO N
23	MO N TE	TE KE	ITU KO	HICHO	CHII
24	JYU JYA	NO BU	MI SA	TSUSOSHU	RI YU
25	O WA	SA RN N	E KI YO	BI YO DA	YO HI YO

The molded rubber ear caps on the receivers have a hollow ring cushion that is filled with silk or silk floss and provides a comfortable sound seal on the ear.

Figures 141, 142, 143, 144, 145, 146, 147, and 148 show the size and construction of the units and assemblies.

Samples of the various telephone units have been forwarded to the Bureau of Ships:

NavTechJap Equipment No.	Item
JE22-2056A	Table Model Telephone (Battery type)
JE22-2056B	Handset Telephone (Battery type)
JE50-1282A	Handset and Ringer Box (Sound powered)
JE50-1282B	Handset and Ringer Box (Sound powered)
JE50-1283A	Handset, Molded Rubber (Sound powered)
JE50-1284	Portable Telephone (Sound powered)
JE50-1285	Portable Telephone (Sound powered)

4. Wind Intensity and Direction Indicators

This section describes the design and gives the performance of the most modern wind intensity and wind direction indicators used by the Japanese Navy.

Performance data included is based on oral information received from the instrument manufacturer (Kyoto Electric Work) in the presence of representatives of the Technical Department of the Japanese Navy Ministry, on information received from the Electrical Section at Kure Naval Base, and on information contained in an instruction book supplied by the instrument manufacturer.

Samples of t equipment covered by this report were obtained from Kure Naval Base and shipped to the Bureau of Ships for further investigation.

The wind intensity and direction indicator discussed here is very well built and is of a design comparable to that currently used by the U. S. Navy except that the Robinson cups on the intensity indicator are not equal to U. S. design.

The damping and coupling mechanisms on the direction indicator are of particular interest. Tests should be made on the samples of this equipment returned to the U. S.

The performance as reported by the Japanese is good. This equipment could not be tested in Japan, but may be checked in U. S. laboratories.

The Electrical Section of Kure Naval Base reports excellent performance from this equipment on shipboard.

There is no provision for input from this system to the fire control computing mechanism.

a. Wind Direction Indicator System

This equipment consists of the following major items:

(1) Direction transmitter.

(2) Junction box.

(3) Direction indicator.

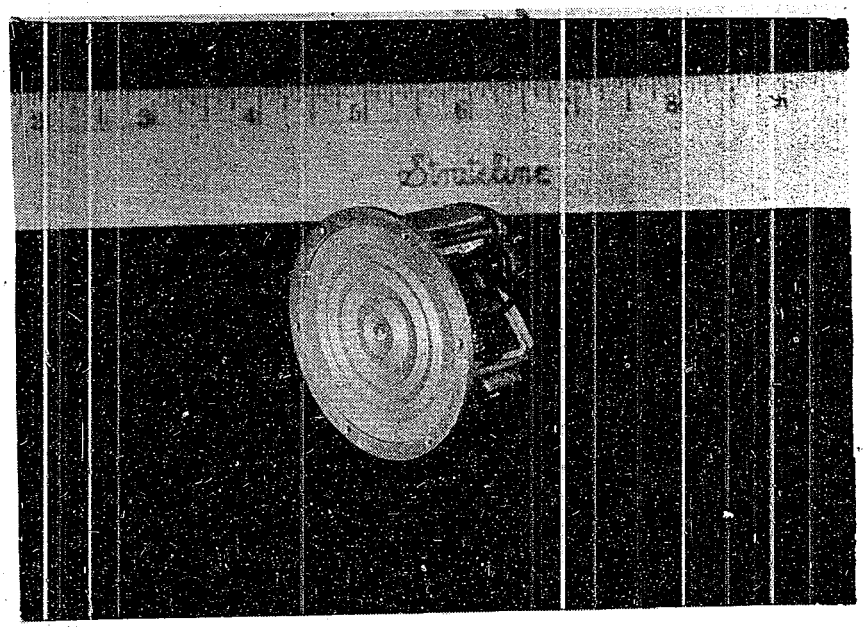

Figure 140
SOUND POWERED UNIT - DIAPHRAGM COVER REMOVED

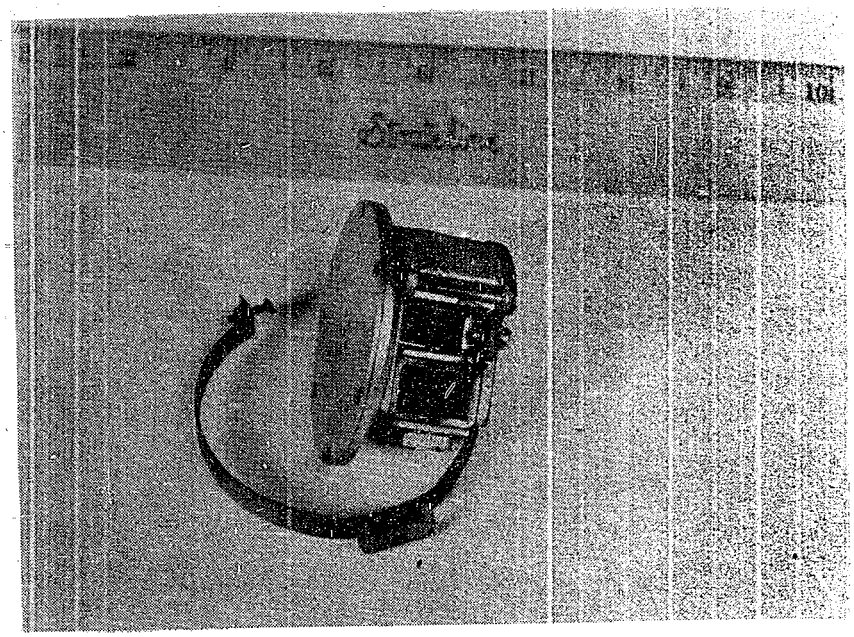

Figure 141
SOUND POWERED RECEIVER

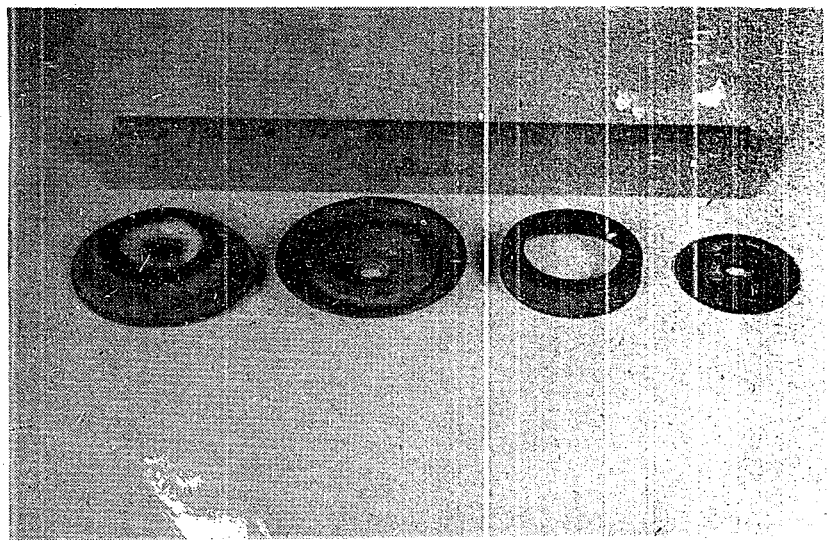

Figure 142
SOUND POWERED BREAST TRANSMITTER AND HEAD PHONES

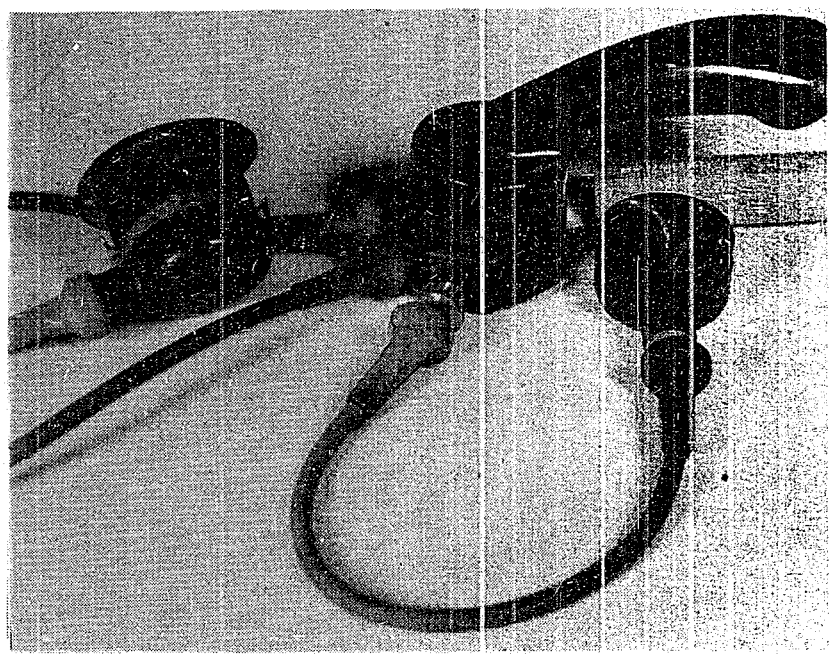

Figure 143
EAR CAP SECTIONS AND CLAMPING RING.

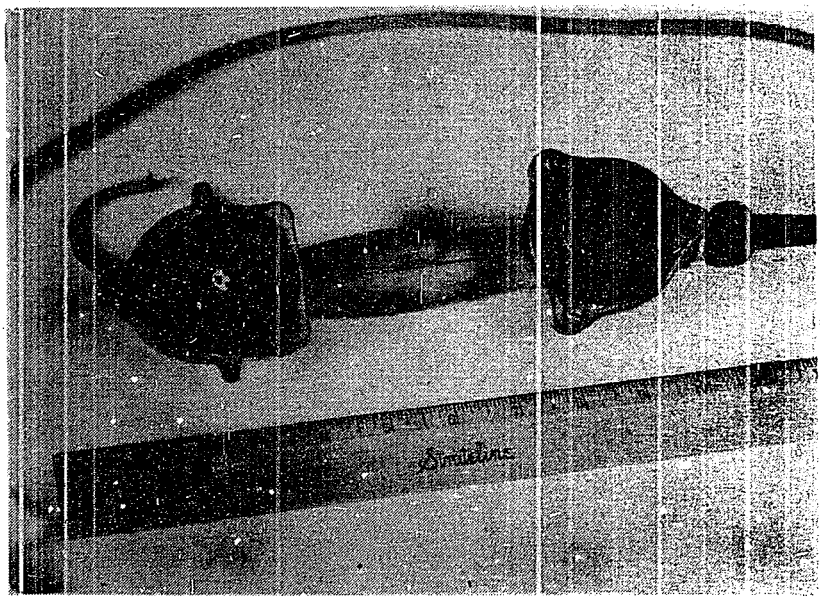

Figure 144
MOLDED RUBBER HANDSET - FRONT VIEW

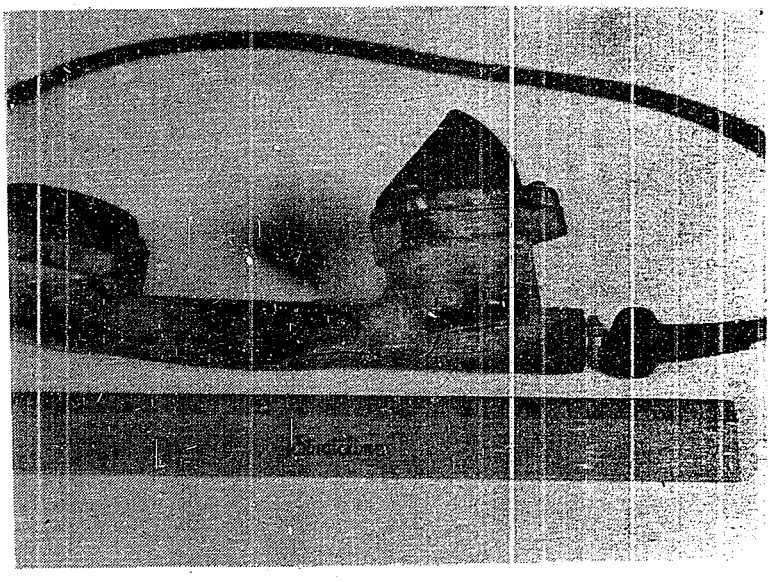

Figure 145
MOLDED RUBBER HANDSET - SIDE VIEW

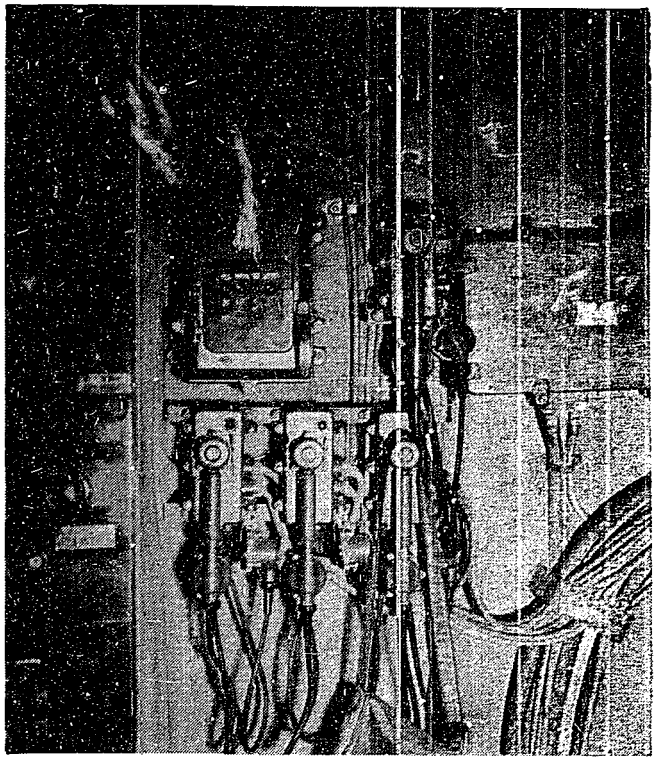

Figure 146
BATTERY TELEPHONE HANDSETS
AND SPECIAL EXCHANGE SWITCH BOX

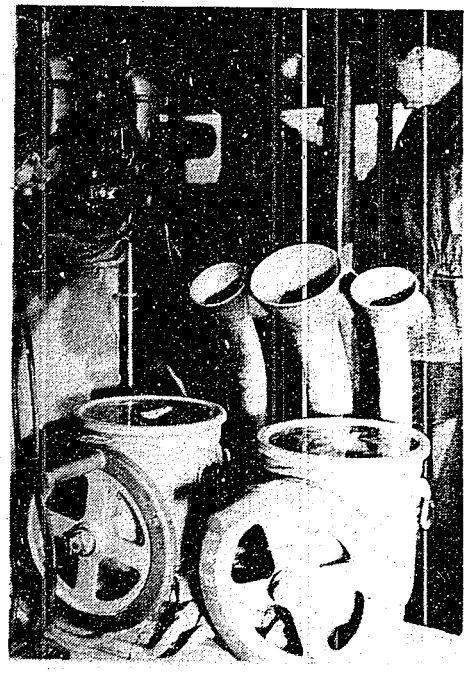

Figure 147
BATTERY TELEPHONE BREAST TRANSMITTERS
AND HEAD PHONES

The components of this system are described as follows:

Direction Transmitter - The assembly drawing of the unit is given in Figure 148.

The main shaft of the wind vane is coupled to the selsyn shaft though two spiral springs of the general nature of clock springs. One end of each spring is made fast to the coupler. A pin at the outer extremity of the crank arm attached to the wind vane shaft engaged the free end of one of the springs. The selsyn is therefore driven by a resilient drive.

The selsyn is coupled by a direct drive to an eccentric on the lower end of the drive shaft. This eccentric carries three piston rods which in turn are connected to three pistons which ride in cylinders immersed in oil. This unit in the base of the direction transmitter comprises the damping mechanism. Its purpose is to filter out rapid fluctuations in wind direction and make possible a reading of the principal or overage wind direction.

Junction Box - The junction box contains a power transformer which provides 15 volts A.C. for instrument lighting in the wind direction and wind speed indicators. The power transformer is designed to work from a 50 volt, 50 cycle ship's source. The assembly of this unit is shown in Figure 149.

Wind Direction Indicator - This is a selsyn type instrument. Figure 150 is the assembly drawing of this instrument.

The accuracy of the equipment was reported by the manufacturer and the Japanese Navy as being ± five degrees. The starting speed was given as five meters per second or 9.7 knots.

The overall schematic for this system is shown in Figure 151. The number of wind direction indicators may be varied from 2 to 10.

b. Wind Intensity Indicator System

This equipment is comprised of the following major items:

(1) Intensity transmitter.

(2) Junction box (same as for wind direction indicator).

(3) Intensity indicator.

The components of this system are described as follows:

Intensity (speed) Transmitter - The assembly drawing of the unit is given in Figure 152. This unit utilizes the Robinson cup in the moving element. The moving element is directly connected to a permanent magnet type D.C. generator in the base of the instrument. The output voltage of the generator at 2600 RPM is approximately 10 volts across a load of 30 ma.

The initial wind velocity (starting velocity) was given as two meters per second. (Note: This is a slight divergence from Figure 152.) The starting torque is 10 gram-cm.

Junction Box - The junction box for this instrument is common with the wind direction indicator. The assembly is shown in Figure 149. In addition to the power transformer previously mentioned which provided 15 volts A.C. for dial illumination of the wind intensity indicators, the junction box contains two variable resistors; one to

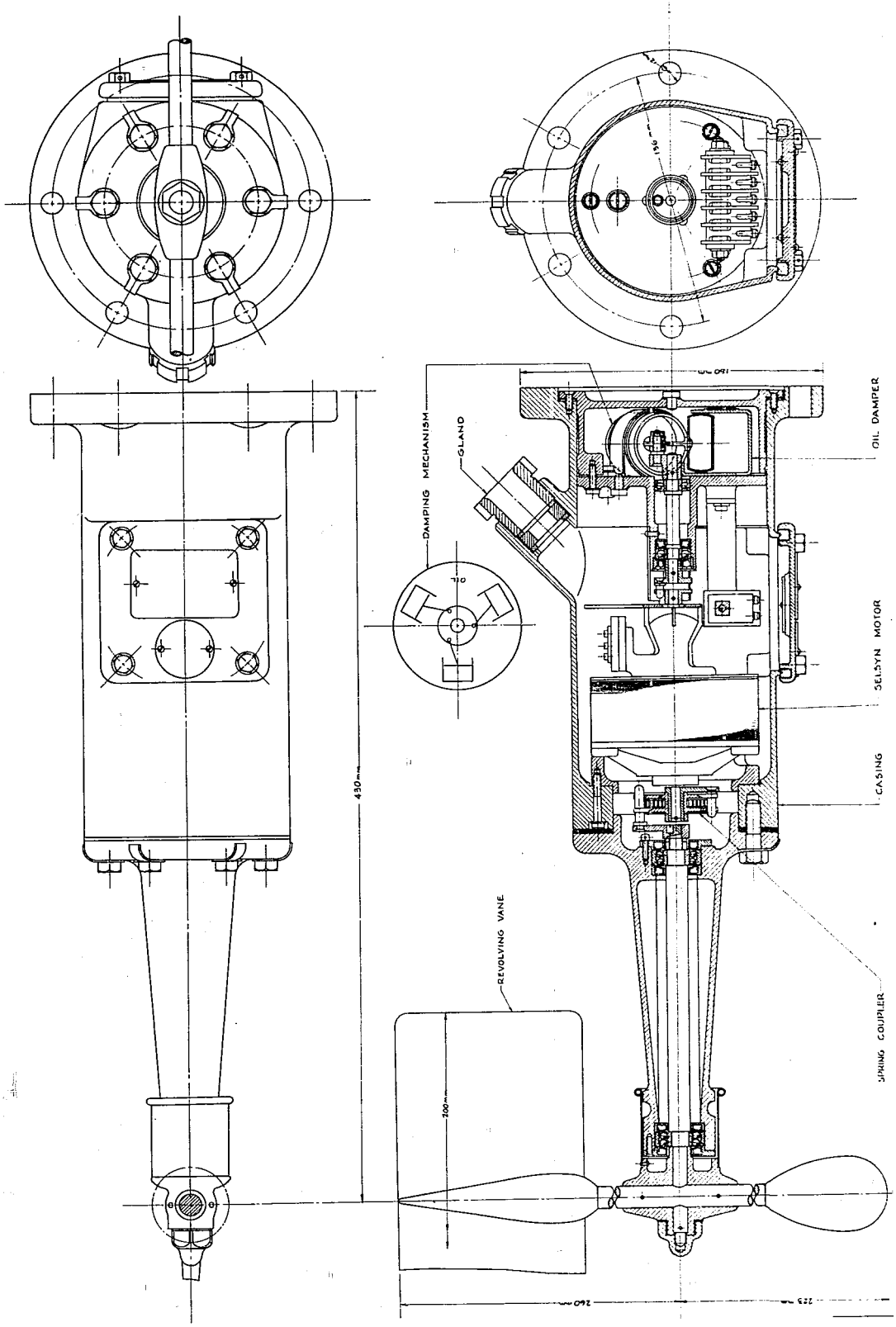

Figure 148
WIND DIRECTION TRANSMITTER - ASSEMBLY

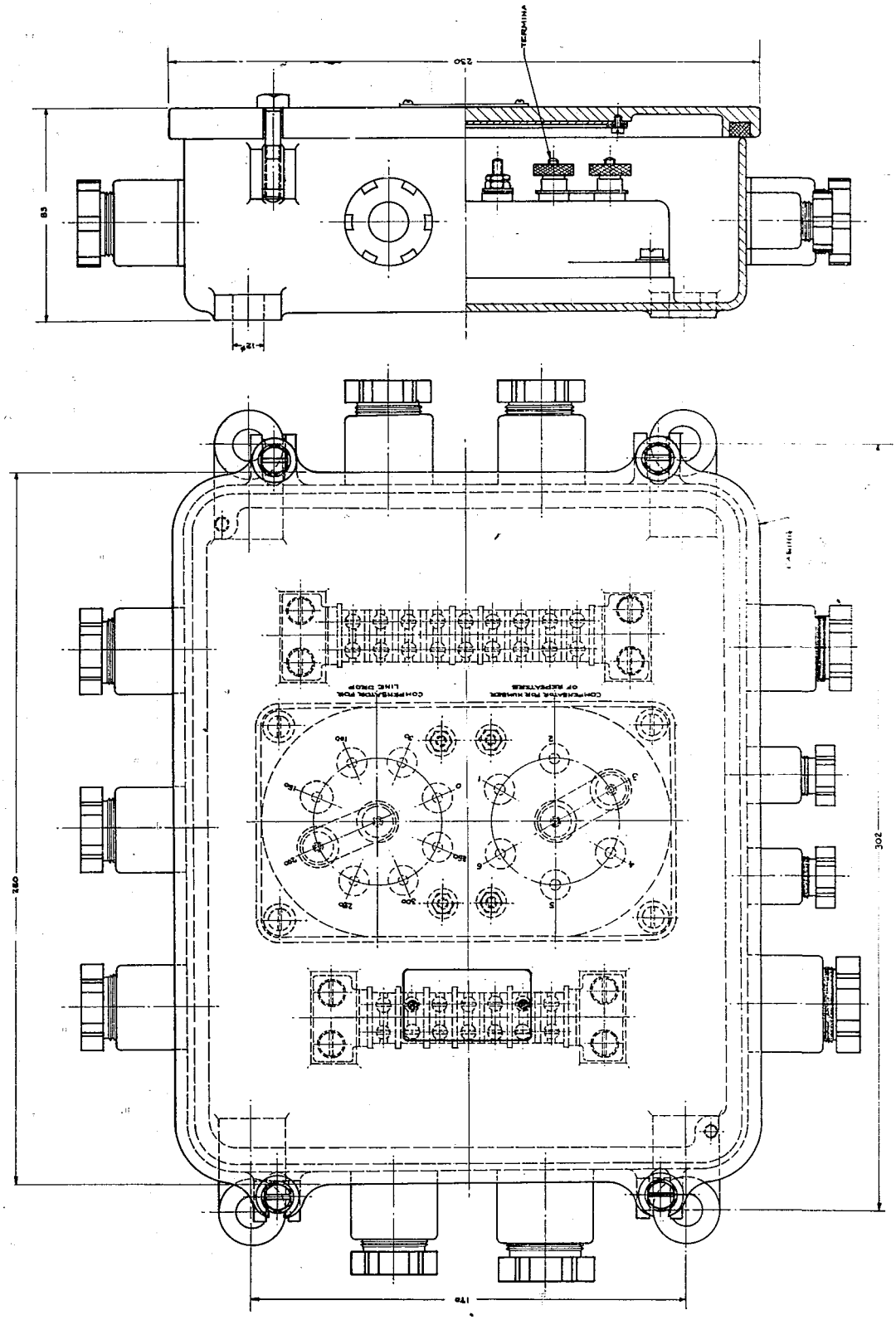

Figure 149
WIND DIRECTION AND WIND
INTENSITY INDICATOR JUNCTION BOX - ASSEMBLY

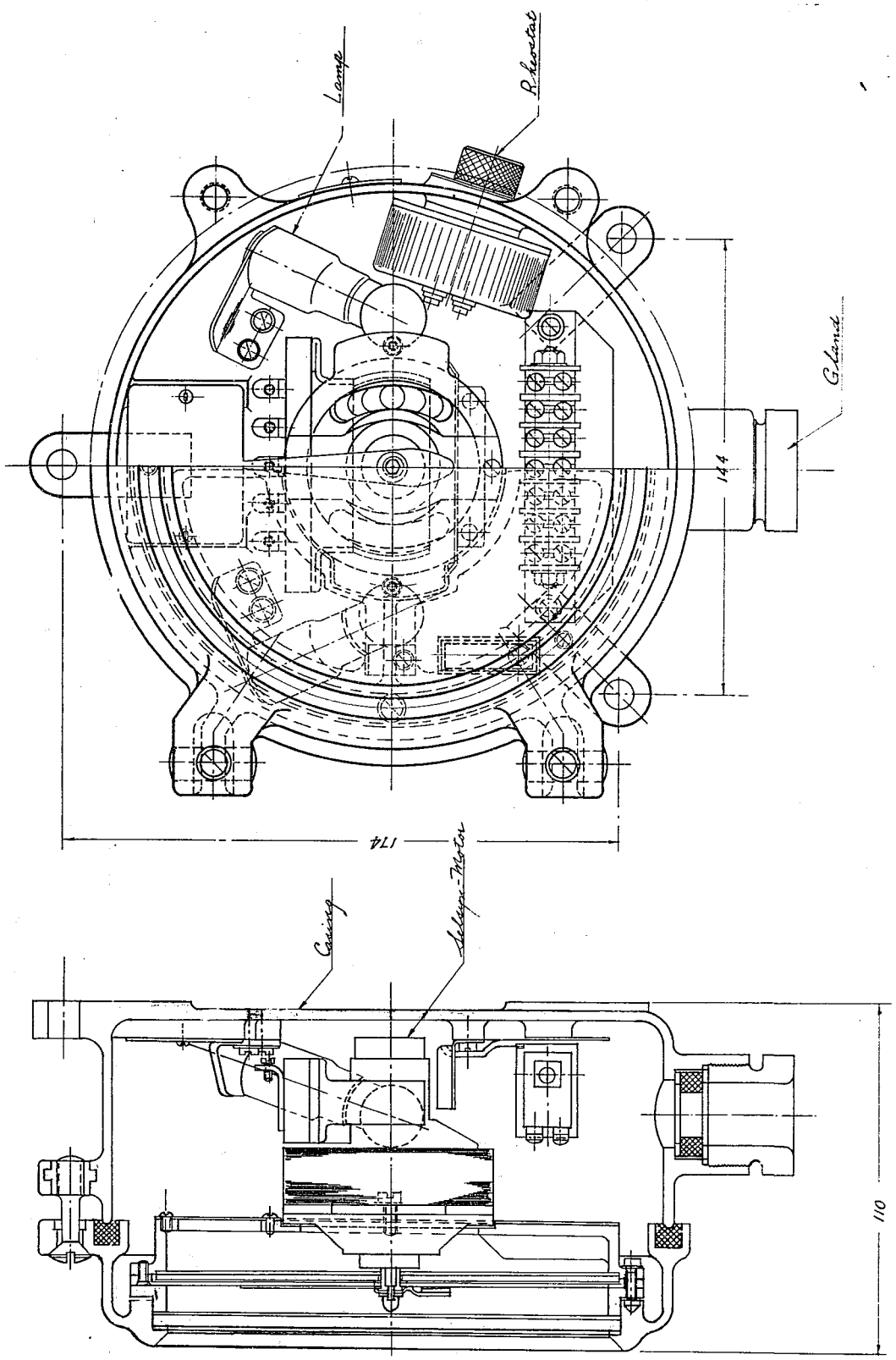

Figure 150
WIND DIRECTION INDICATOR - ASSEMBLY

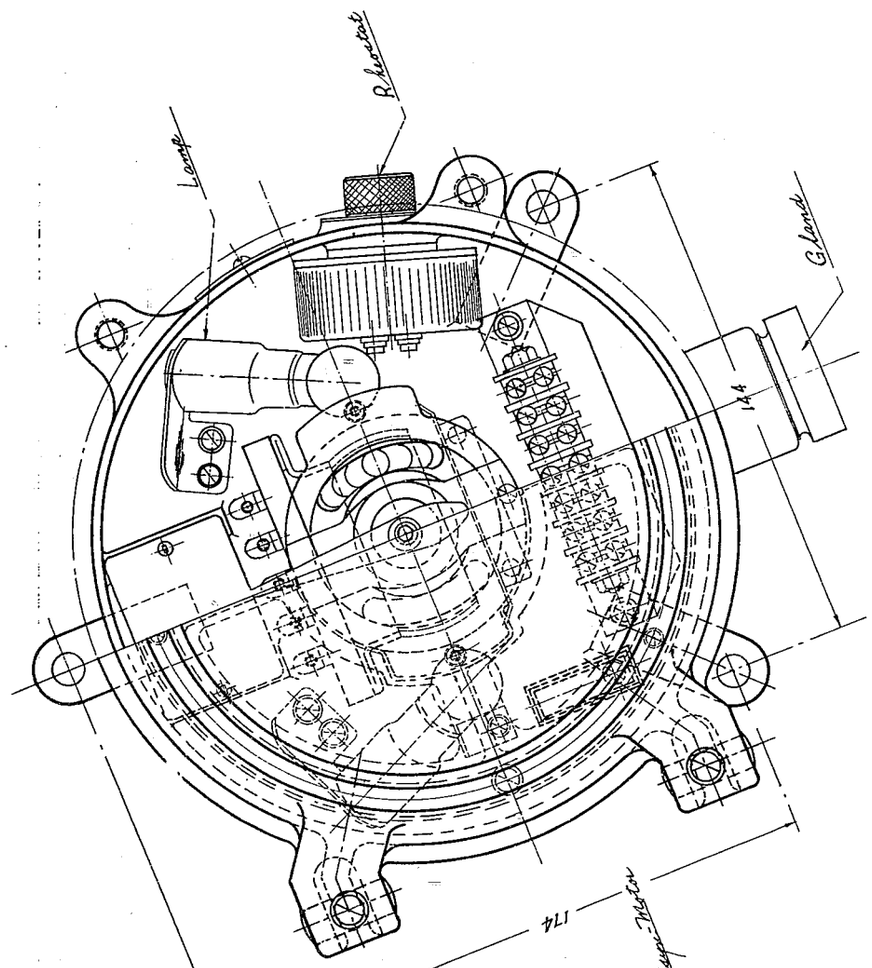

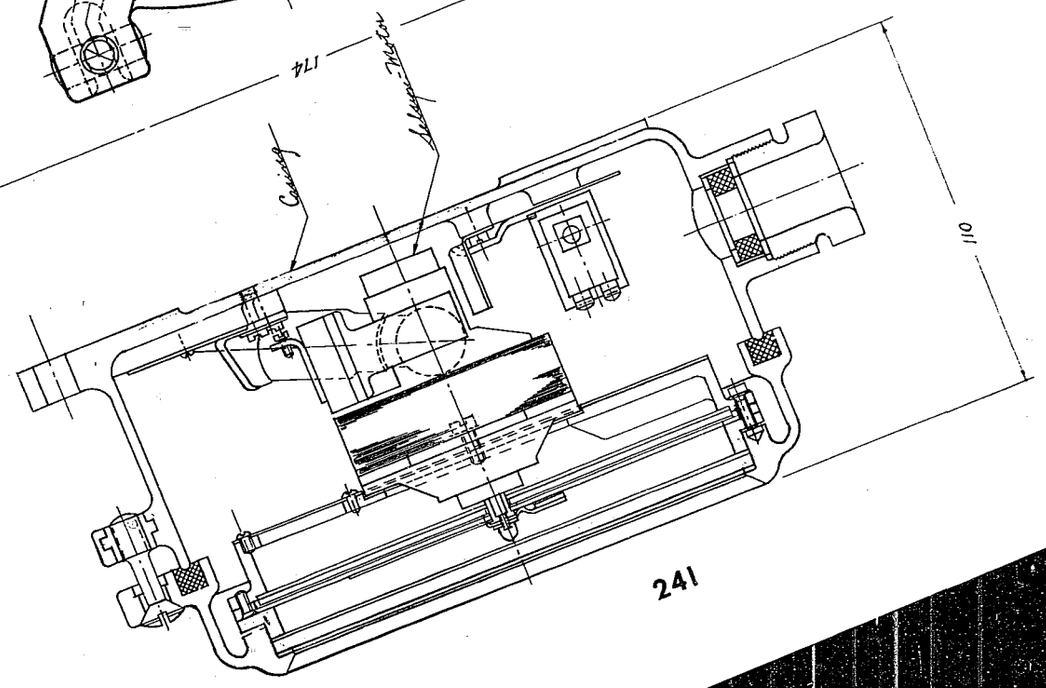

Figure 150
WIND DIRECTION INDICATOR - ASSEMBLY

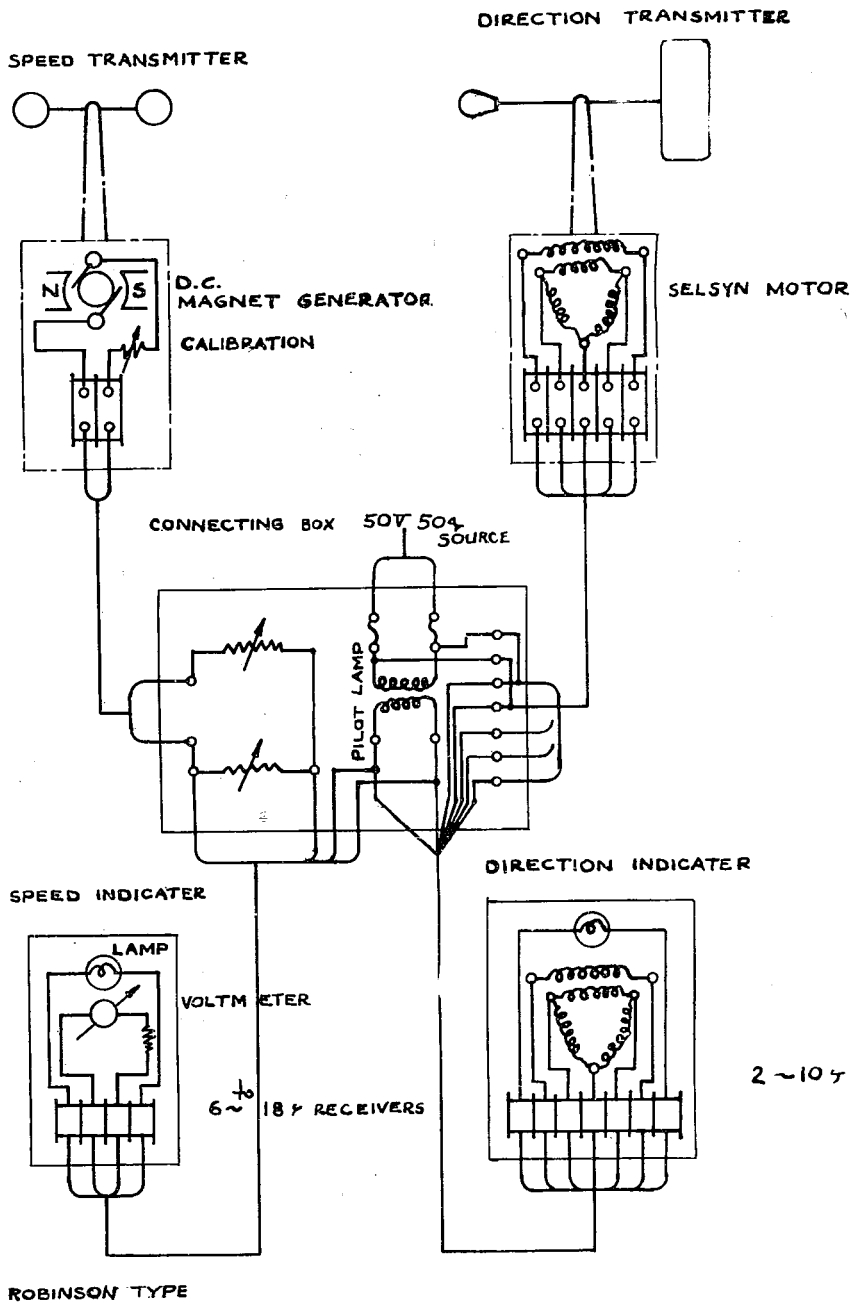

Figure 151
SCHEMATIC DIAGRAM - WIND DIRECTION AND INTENSITY SYSTEM

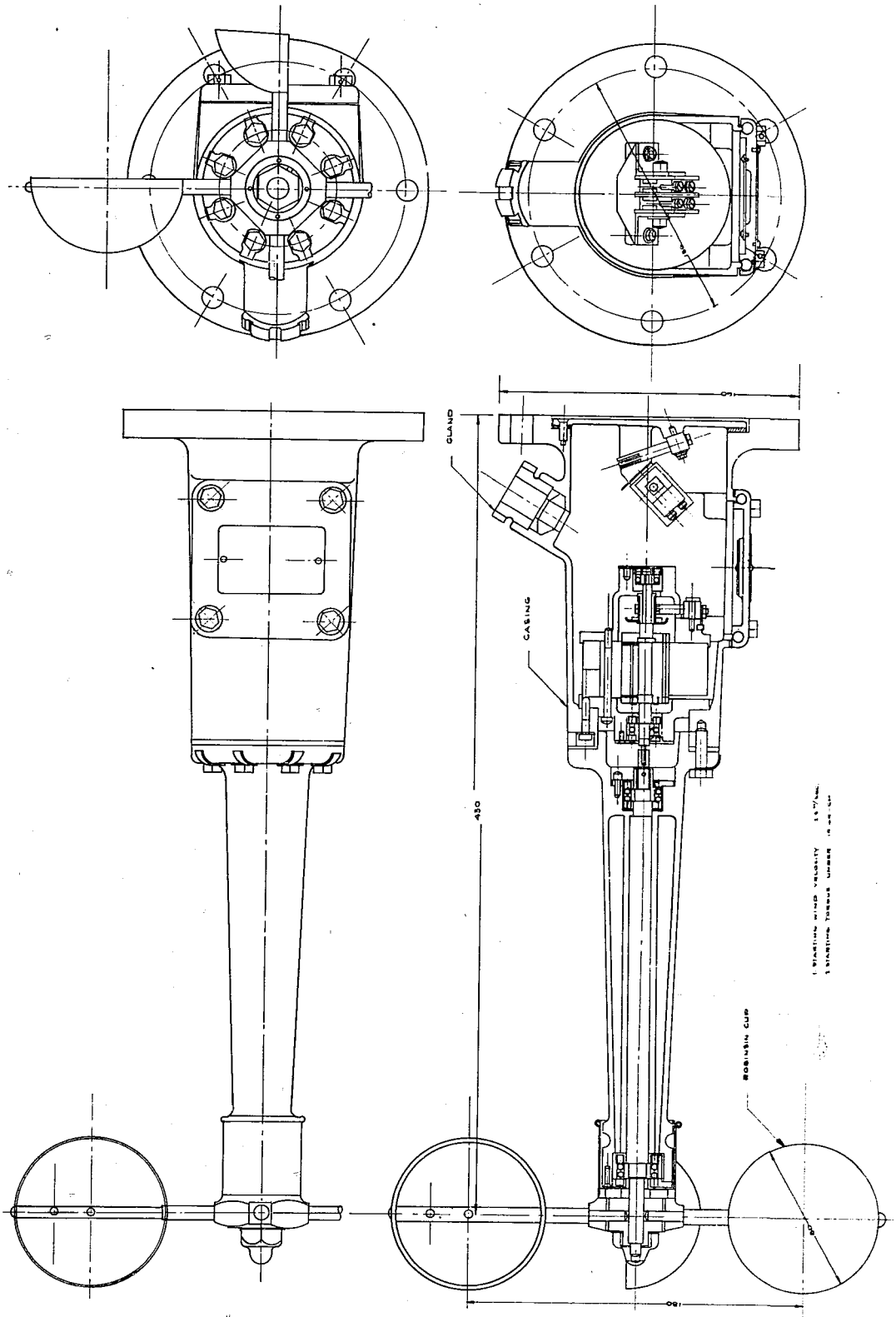

Figure 152
WIND INTENSITY TRANSMITTER ASSEMBLY

compensate for voltage drop in the line from the intensity transmitter to intensity indicators and the second to compensate for the number of intensity indicators on the line. Compensation is provided for six to eight wind intensity indicators.

Wind Intensity Indicator - The assembly of this instrument is shown in Figure 153.

This instrument is a D.C. voltmeter whose internal resistance is 300 ohms and which draws a maximum of three ma for full scale deflection.

The instrument is designed to indicate a maximum wind velocity of 60 meters per second (approximately 116 knots). The Japanese manufacturer and the Technical Department of the Japanese Navy Ministry give its accuracy as ± two meters per second.

5. Salinity Indicator Equipment

Salinity indicating equipment is a comparatively new development in the Japanese Navy, having been brought out in 1943 and installed only in the later ships. The previous method of testing for salinity had been by chemical analysis. The present equipment is, in general, well constructed and apparently functions satisfactorily, although it is considerably out of date by U. S. standards. It is similar to equipment used in the U. S. Navy about 1925.

There are two types of systems, one manufactured by the Yokogawa Electric Company and the other by the Hokoshin Electric Company. Both types are quite similar in operating principle and design. The systems operate from an A.C. power supply. The indicators are ratio type D.C. meters with self-contained copper oxide rectifiers. Both systems use a Wheatstone bridge circuit for energizing the temperature compensating, or control coil of the meter. The salinity, or driving coil of the meter is energized through the conductivity of the motor.

The indicators for both systems are of three types: indicator, alarm and recording. The indicator type is a conventional round meter with vertical indicating pointer. The scale is graduated in milligrams of salt per liter. The alarm type is a rectangular case instrument with a horizontal movement pointer. A manually set limit pointer is provided to set the maximum salt content for operation of the alarm. When the indicating pointer passes the limit pointer, a mercury switch is tripped to close the alarm circuit. This type, incorporating the alarm feature, was not generally used by the Japanese Navy as false alarms were frequent due to the motion of the ship when underway. The recording type uses an instrument similar to the alarm type but moves a stylus instead of a pointer. A small timing element synchronous motor drives a set of rollers holding the recording paper and also drives a cam which operates the stylus and makes a dot every 15 or 30 seconds. One roll of recording paper is sufficient for a continuous record for one to two months. The rate of travel of the paper is slow enough to give practically a continuous line record.

The circuit of the Yokogawa system is shown in Figures 154 to 156. Figure 154 is an elementary diagram showing the principle of the salinity and temperature compensating circuits with the bridge control and ratio meter. Figures 155 and 156 show the circuit of the system. The transmitting cell H, contains two elements, Rt1 and Rt2, which are used for both the salinity and temperature compensation circuits. The elements are bare silver wound on mica cores. These two elements, through transformer CT, with R1 and two windings of transformer PT make up the bridge which controls the circuit to the temperature compensation coil of the meter through rectifier D. A third winding on transformer PT connects to the two elements at points C1 and C2, through rectifier F and the salinity coil of the meter. The two elements thus become the electrodes for the salinity test. Actually,

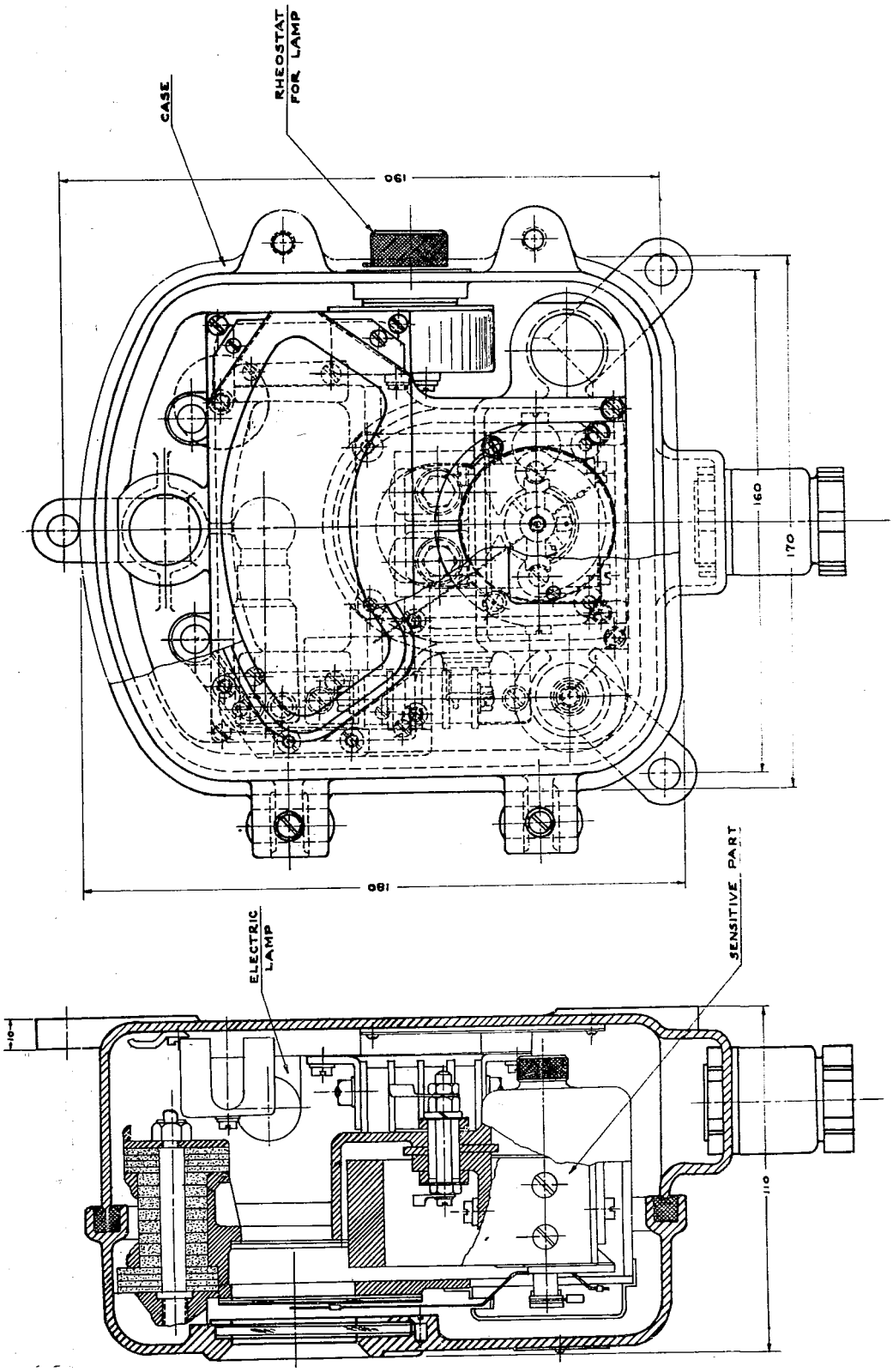

Figure 153
WIND DIRECTION INDICATOR - ASSEMBLY

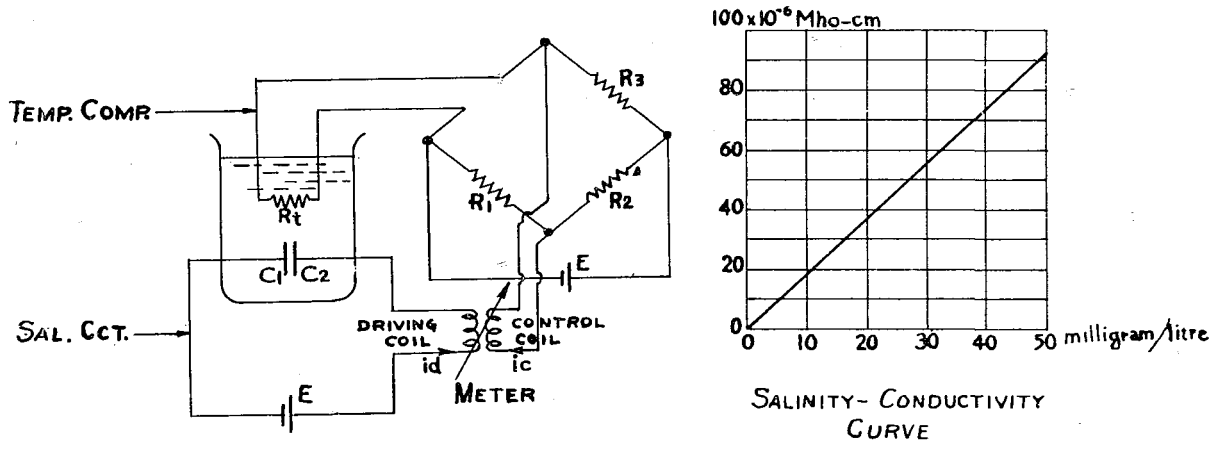

Figure 154
SALINITY AND TEMPERATURE COMPENSATION CIRCUIT
(ELEMENTARY DIAGRAM)

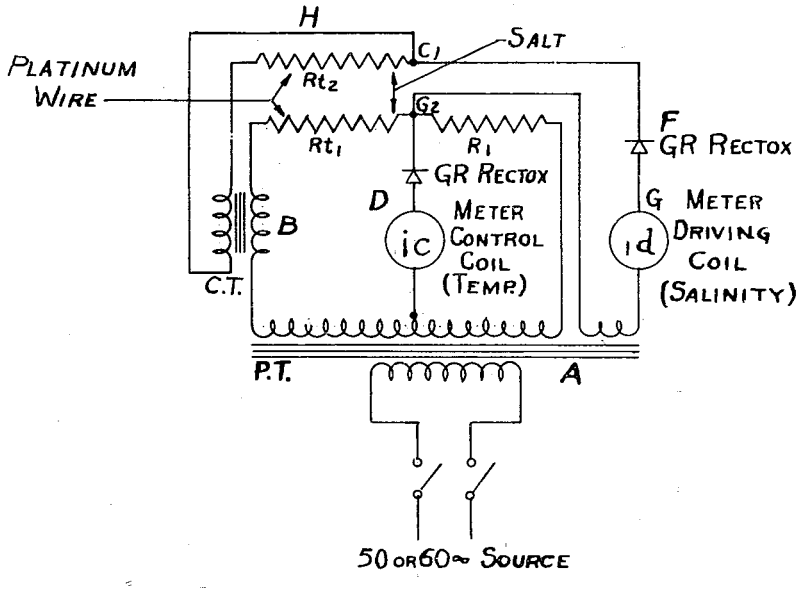

Figure 155
SALINITY INDICATOR CIRCUIT
(SIMPLIFIED SCHEMATIC)

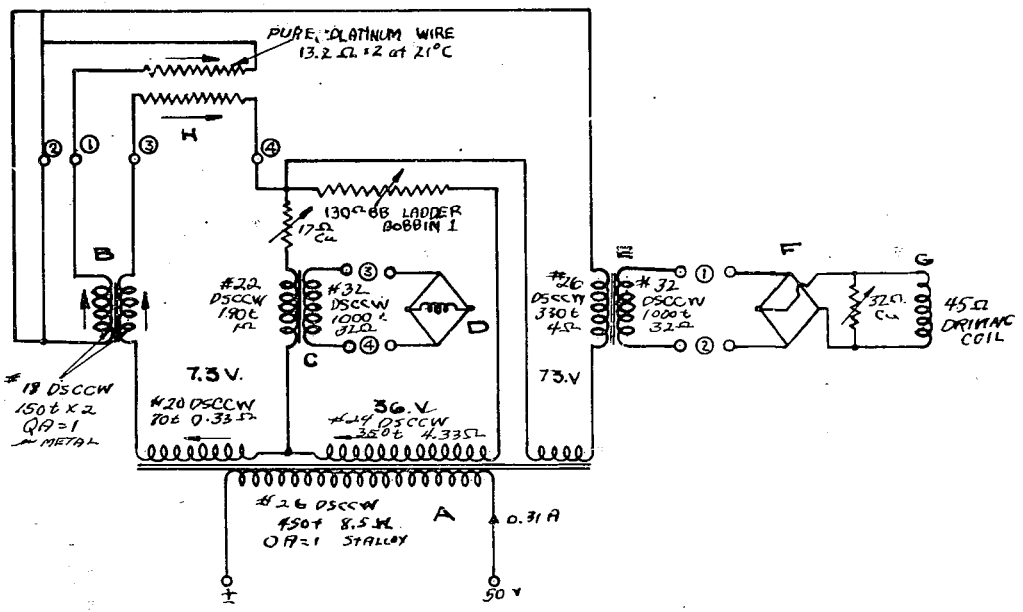

KS. MAGNET MODEL L-12 ASSEMBLY

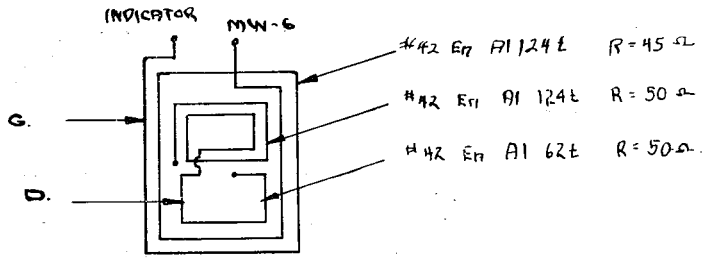

Figure 156
SALINITY INDICATOR CIRCUIT SCHEMATIC,
YOKOGAWA ELECTRIC CO.

as shown in Figure 156, both meter coils, and the associated rectifiers, are connected to the circuit through transformers C and E. Thus all current flowing through the water is A.C. and any effects of electrolysis are minimized. An accuracy of one per cent, full scale, is claimed for this equipment.

The circuit of the Hokoshui system is shown schematically in Figure 157. This system uses separate elements for the salinity and temperature compensation circuits and is somewhat simpler. The temperature compensation elements Rt1 and Rt2 are platinum wire wound on mica cores and electrically insulated from the water. These two elements together with R1 and R2 form the arms of the bridge circuit for the control coil of the meter. The bridge circuit is connected to one winding of transformer PT through the rectifier T. The two salinity electrodes C1 and C2 are also platinum and are connected to a second winding of transformer PT and through rectifier S to the driving coil of the meter. Thus the salinity and temperature compensation circuits are set up practically identically with those in the Yokogama system. However, it is noted that the current is rectified before entering the water. An accuracy of two per cent, full scale, is claimed by the manufacturer.

6. Underwater Logs (Speed and Distance Indicators)

Japanese naval personnel interrogated stated that there were two principal types of logs used by the Japanese Navy mainly:

Type 98 - Pitot tube type

Type 92 - Impeller type

The above statement was verified by actual inspection of the logs installed in submarines, destroyers and aircraft carriers.

The bulk of the information obtained on the Type 98 (Sal) log was contained in a treatise prepared by the manufacturer (Tokyo Keiki), from a circuit diagram provided by Kure Naval Base and from information supplied by the manufacturer's engineer, and representatives of the Technical Department of the Japanese Ministry and the Electrical Section at Kure Naval Base.

Information on the Type 92 log was obtained from Hokushin Denki, and representatives of the Japanese Navy as noted above. A good written description of the Type 92 log could not be procured from the manufacturer.

The performance data for the two types of logs could not be checked by actual test. Samples of both logs have been forwarded to the Bureau of Ships for inspection.

a. Pitot (Type 98) Log

The principle of operation of Type 98 log is of Swedish origin. It is similar in principle of operation to logs currently in use by the U. S. Navy. Basically, the log works from the pressure developed by pitot tubes extending from the bottom of the ship.

The manufacturer and representatives of the Japanese Navy state that the accuracy of this log is as follows: maximum error is less than 0.2 knots for speeds from 1 to 40 knots, and for distance measurements the error is less than 1%.

The log is well built and, from information available has given excellent service. The reported accuracy is good. It is comparable to logs used by the U. S. Navy.

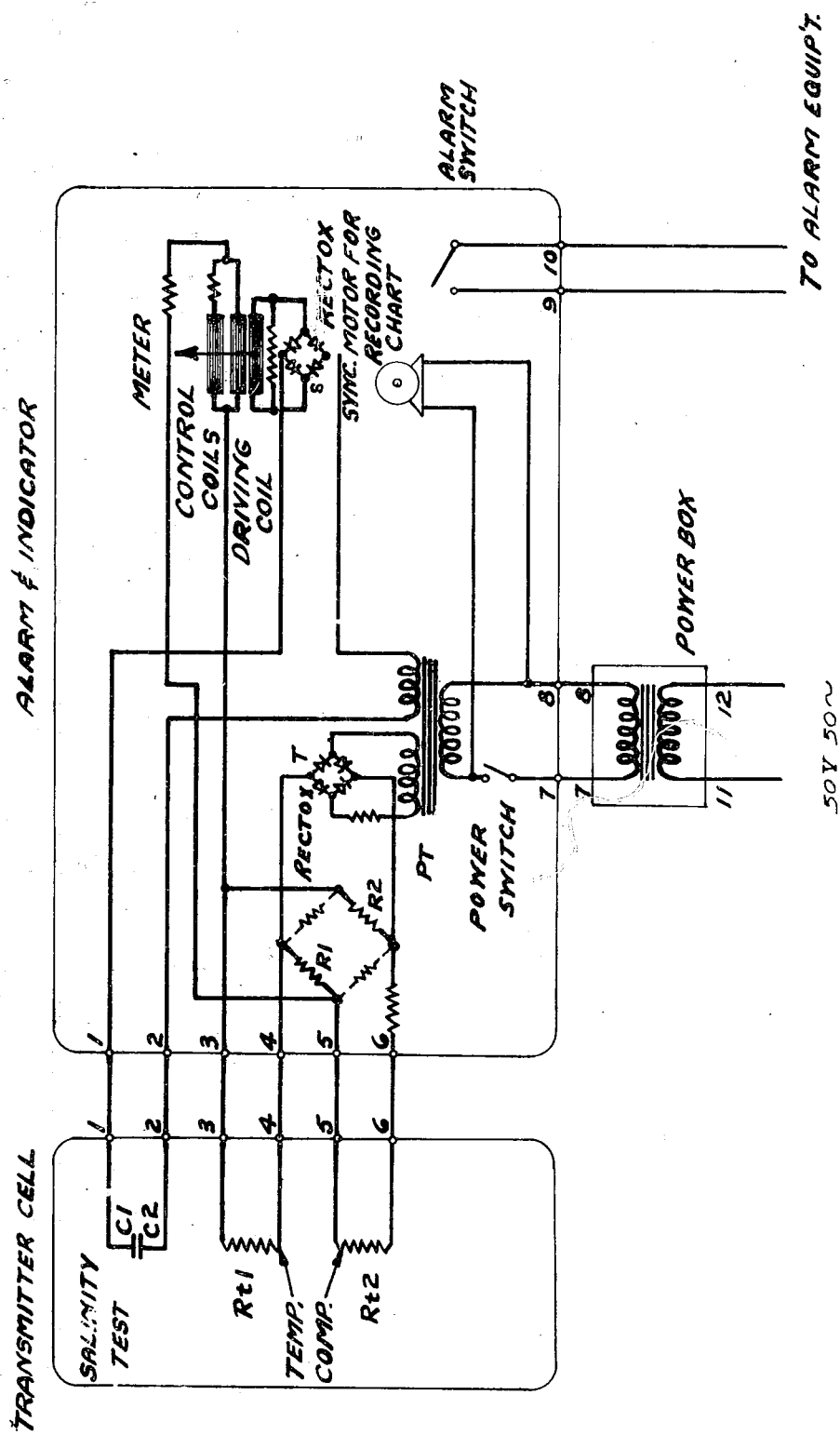

Figure 157
SALINITY INDICATOR CIRCUIT SCHEMATIC,
HOKUSHIN ELECTRIC CO

This device utilizes pitot pressure to measure the speed of the ship, and by integrating the speed measured, the distance traveled by the ship is recorded. A spring tension which opposes the pitot pressure is used and since the measurements are made by balancing the two pressures, a high accuracy is attained. For speed measurements, the maximum error is less than 0.2 knots for speeds from one knot to full scale reading. For distance measurements the error is less than 1%. The adjustable range for the pitot coefficient variant is 0.8 to 1.2. The correction range of the error percentage, which varies with speed is plus or minus 10%. The speed scale is from 0-40 knots. (Smallest division one knot.) The distance scales are 0-10,000 meters (smallest division 10 meters), and 0-1000 nautical miles (smallest division 1/100 nautical mile), both being used. For power source either 50 volt, 50 cycle or 60 volt, 60 cycle single phase A.C. can be used. The standard equipment for a ship is listed in Table XI. Figure 158 is an assembly photograph of the Type 98 log less the pitot tube.

The pressure P in gm/cm^2 which arises in uniformly flowing sea water, when the flow velocity is considered V knots is:

$$P = \frac{\rho}{2\ gm} \left(\frac{185200}{3600}\ V\right)^2$$

where: ρ = specific gravity of sea water (1.025)
gm = acceleration due to gravity (980 cm/sec^2)

Therefore, if the pressure P is known, the velocity V can be calculated. This square root computation is made mechanically by using two levers, having mechanically predetermined lengths and position of pivots, main spring, and cam, as indicated in Figure 159. The speed of the ship is directly proportional to the angle or rotation of the cam, which rotates until the spring tension balances the pitot pressure.

In Figure 159, when the force P, which is proportional to the pitot pressure, presses the lever D in an upward direction, the lever A revolves clockwise thus closing the circuit of the motor which rotates the cam C in the direction of the arrow. When C turns, lever B also turns in the direction of the arrow and the main spring E is expanded. Then the tension of E tries to rotate A counter clockwise and furnishes the pressure to oppose P. The cam rotates through an angle and when the two pressures balance the motor stops, and the consequent configuration is assumed by A, B and C.

The square root operation is performed approximately by A, B and E, and C makes the correction for the small error due to the approximation. The whole system performs an accurate square root computation.

The motor circuit is as shown in Figure 160. The sliding contact S is operated by A, Figure 159, and the magnitude and phase of the voltage which is induced in the secondary winding of the single winding transformer changes due to the resistor B, which varies with the movement of the contact brush. Consequently the speed and direction of rotation of the armature D changes. Moreover, the motor M has two field windings A and B. The circuit of the auxiliary winding B has a capacitor C which makes the current in this circuit approximately 90° out of phase with the current in the main winding A, thereby producing a torque in D.

As described above, since a displacement can be obtained which is proportional to the speed, the distance can be obtained by integrating this value with respect to time. That is, if the angle of screw S Figure 160 is made proportional to the speed V, the displacement

Table XI
List of Parts for Type 98 Log

Symbol	Name of Part	Number per Set	Approx. Wt. (kg)	Dimensions in mm
A	Power Switch	1	2.5	100 x 100
B	Fuse Box	1	4.0	200 x 300 x 100
C	Pressure Receiver	1	50	450 x 600 x 250
D	Speed and Distance Trans.	1	95	600 x 700 x 250
E_1	Speed Indicator Distribution Box	3	7	300 x 450 x 100
E_2	Speed Indicator Distribution Box for Fire Control	2	4	200 x 300 x 100
H_1	Condenser	1	6	250 x 350 x 150
F	Distance Indicator Distribution Box	2	4	200 x 300 x 100
L_1	Distance Indicator Mod. I	2	10	250 x 350 x 150
L_2	Distance Indicator Mod. II	3	7	150 x 200 x 150
R_1	Resistor Box	1	13	350 x 350 x 200
S	Speed Indicator	20	10	250 x 350 x 150
		1	2	150 x 150 x 100
		2	1.5	70 x 250 x 70
	Spare Parts Box	1	15	300 x 450 x 300
	Static Pressure Shaft	1		
	Petot Tube			

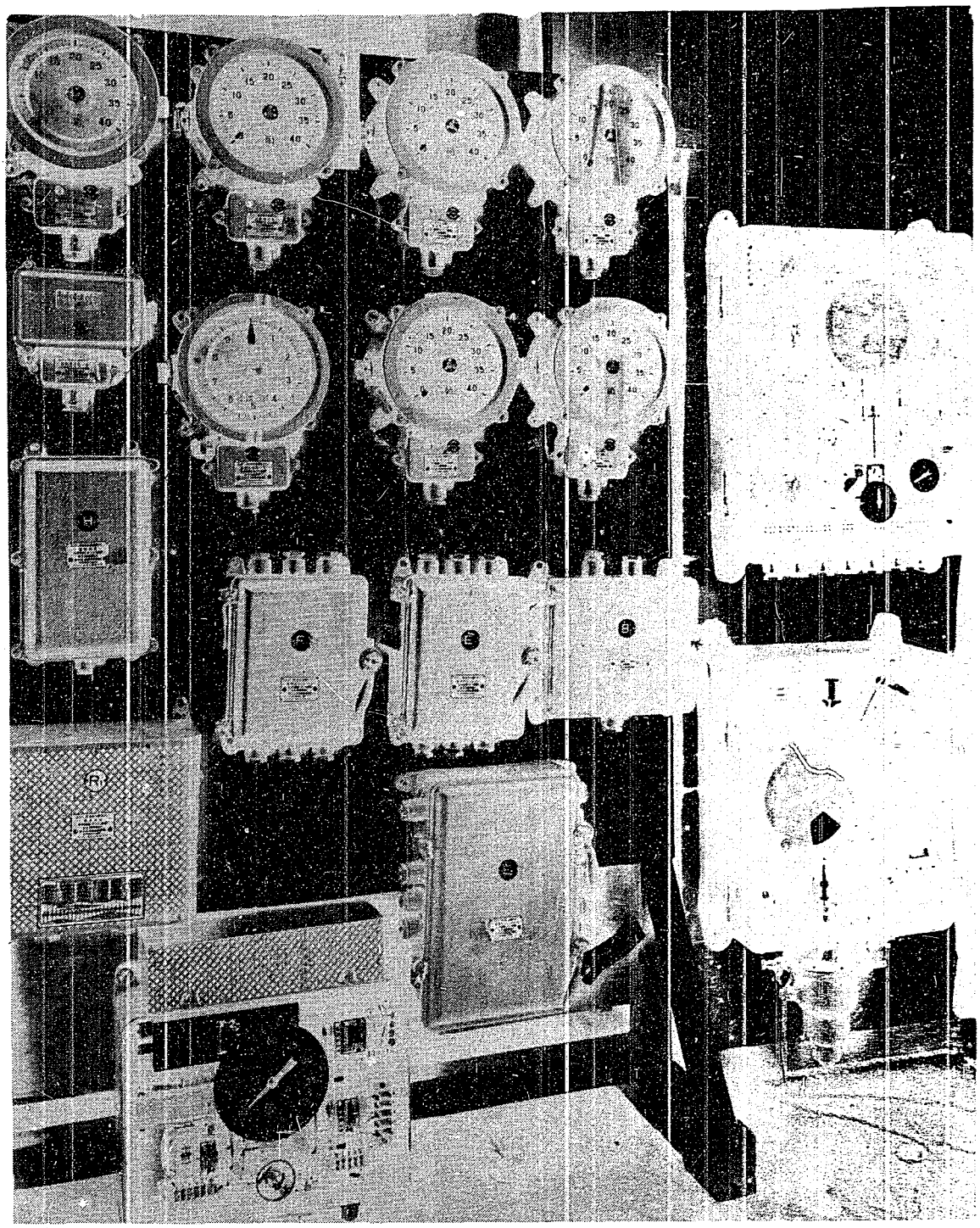

Figure 158
TYPE 98 LOG - ALL ITEMS

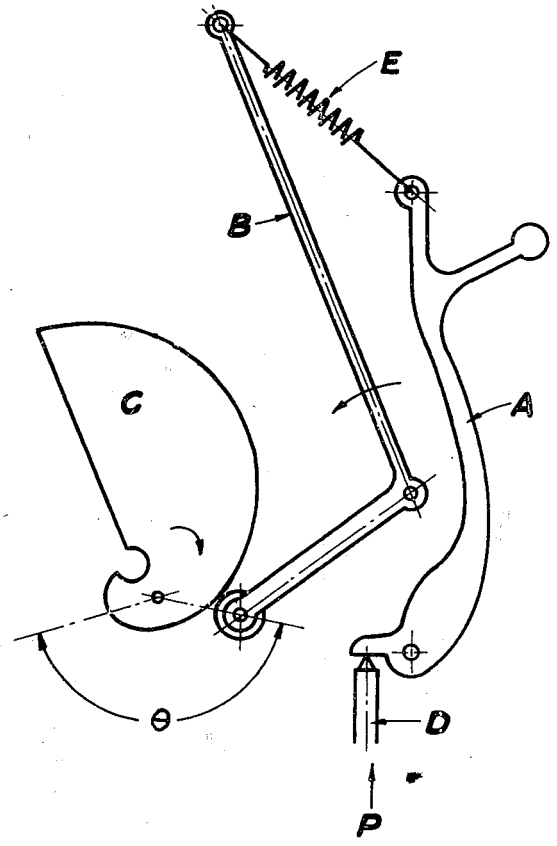

Figure 159
TYPE 98 LOG - OPERATION DIAGRAM SPEED SYSTEM

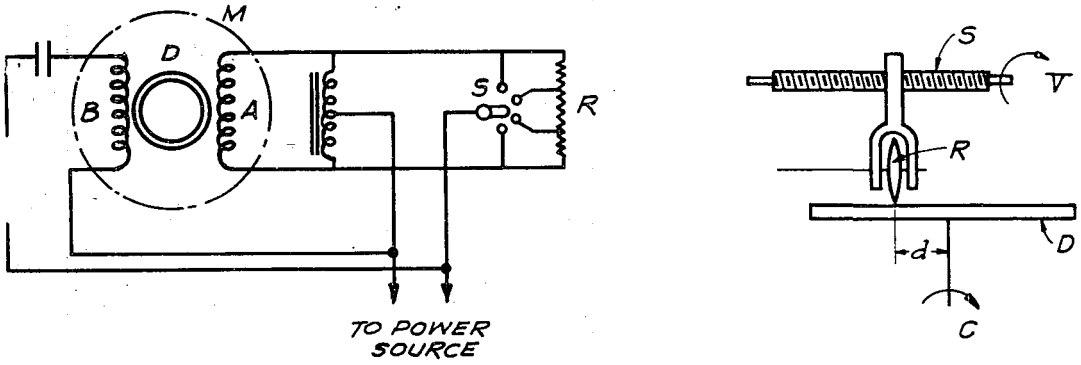

Figure 160
TYPE 98 LOG - OPERATION DIAGRAM
FOLLOW-UP AND DISTANCE SYSTEM

of the roller R will consequently be proportional to V. For this reason, if the velocity of rotation of disk D is made constant, the total number of rotations of R will be proportional to the distance.

In order to rotate D, a capacitor and a motor having the same construction as that described in the preceding paragraph is used. The rotation of C is made constant by a clock the spring of which is wound by the motor. The relative speed of the clock and the motor is detected by using a differential gear mechanism. When there is a difference in the speed, the resistance in the circuit of the main winding of the motor is automatically regulated to make the two speeds always the same.

The connections between the speed-distance transmitter and the various speed and distance indicators are made by using selsyn motors.

All of the equipment shown in Table XI is to be connected as shown in Figure 161. The following is an outline of the construction and use of each part:

Power Switch (Figures 162 and 163) - A revolving two pole switch, enclosed in a watertight box is used and it controls the power for the complete equipment.

Fuse Box (Figures 162 and 163) - This contains the fuse for the main circuits of this equipment in a waterproof box.

Pressure Receiving Device (Figures 164 and 165) - This is the speed calculator described previously and in addition to the main mechanism described in Figure 159 it includes the correction gear, pressure detectors and other zuxiliary equipment.

The pressure detector consists of three sets of bellows and a casing. The bellows are used in combination as indicated in Figure 166. On both sides of the main bellow B_0 the supplementary bellows B_1 and B_2 are attached and fixed in a case so that there is no leakage. However, when pressure P_1 (sum of pitot pressure corresponding to speed, and pressure due to depth of water) and P_0 (pressure due to depth of water) are added to the intake pressure, an upward force of $P_1 - P_0$ (in other words, the pitot pressure multiplied by the effective area of the bellows) works on the lever D. The main mechanism is as shown in Figure 159.

There are three kinds of correction devices. The first kind (Figure 159) regulates the tension of main spring E and is attached to the upper part of the spring holder. The effective length and unit elongation of the spring can be adjusted by turning the screw on the inner part of E.

It can be increased or decreased 2.5 times above or below the standard value of 2.5. The tension at the 0 position (the initial tension) can be regulated at the same time by moving the whole spring up and down. The former is called A_1 regulation and the latter is called A_2 regulation. This correction is used to compensate for that part of the percentage of error which is the same for all speeds.

The second kind of correction device is used to compensate for the per cent of error which varies and is proportional to the speed. It is constructed as shown in Figure 167. This is to say, the screw L turns through an angle proportional to the speed and thus displaces the mount K in proportion to the speed. Then, if the grove in H is parallel with the direction of movement of K, the lever F will not

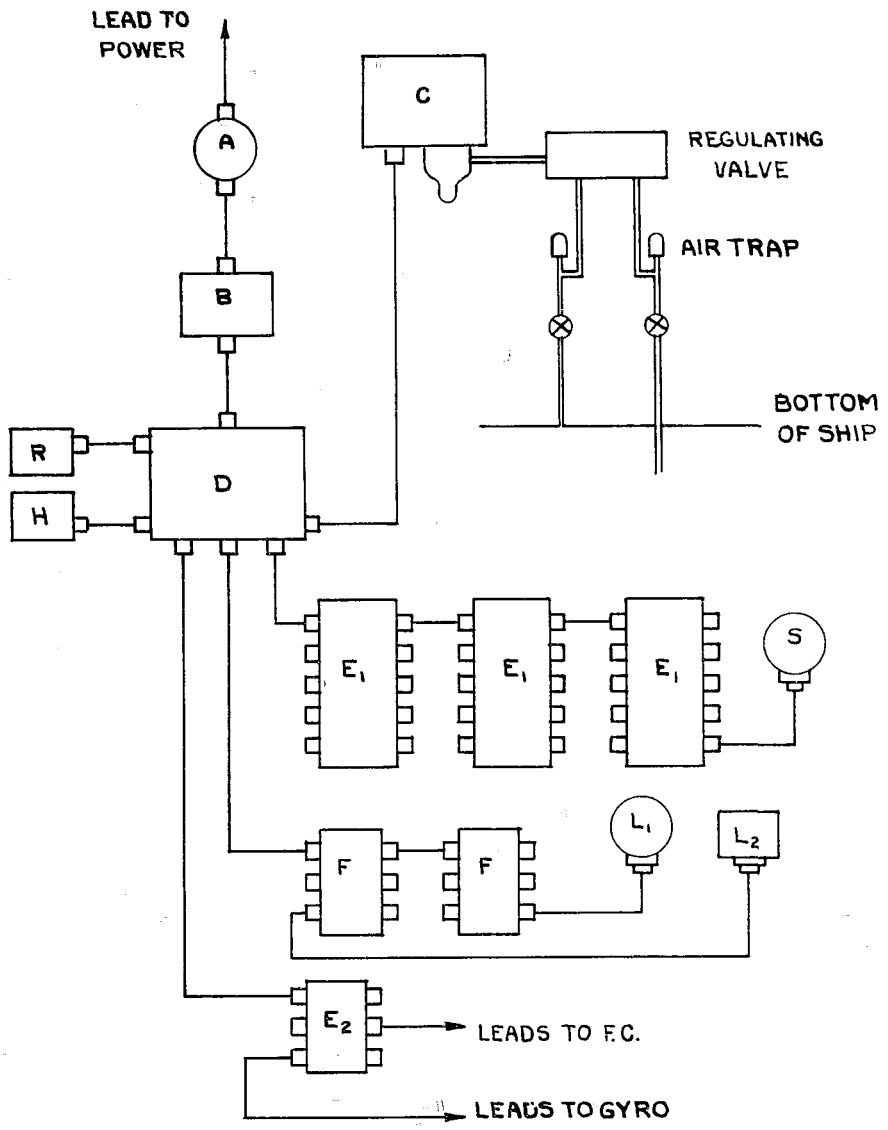

Figure 161
TYPE 98 LCG - BLOCK DIAGRAM

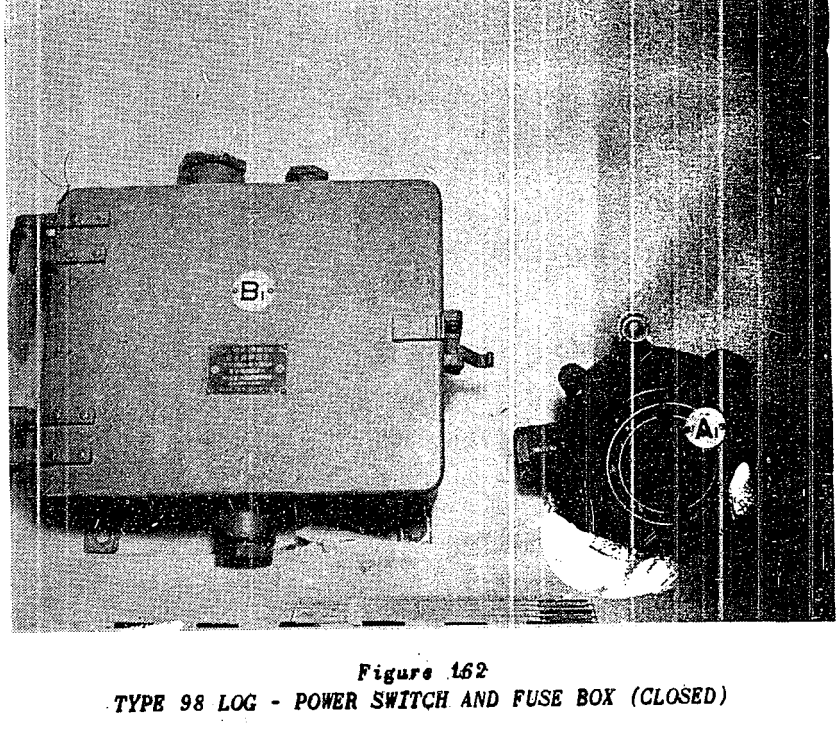

Figure 162
TYPE 98 LOG - POWER SWITCH AND FUSE BOX (CLOSED)

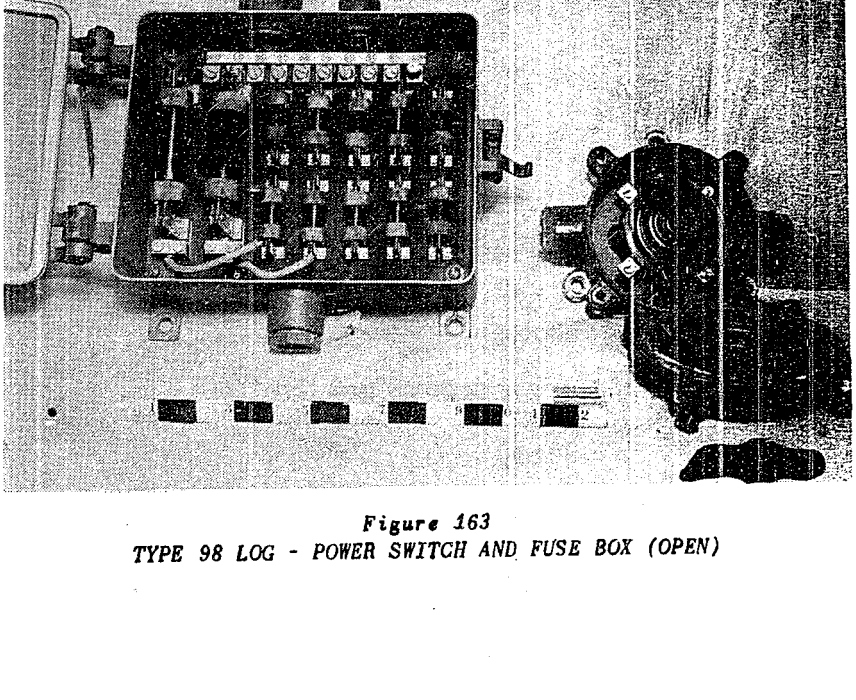

Figure 163
TYPE 98 LOG - POWER SWITCH AND FUSE BOX (OPEN)

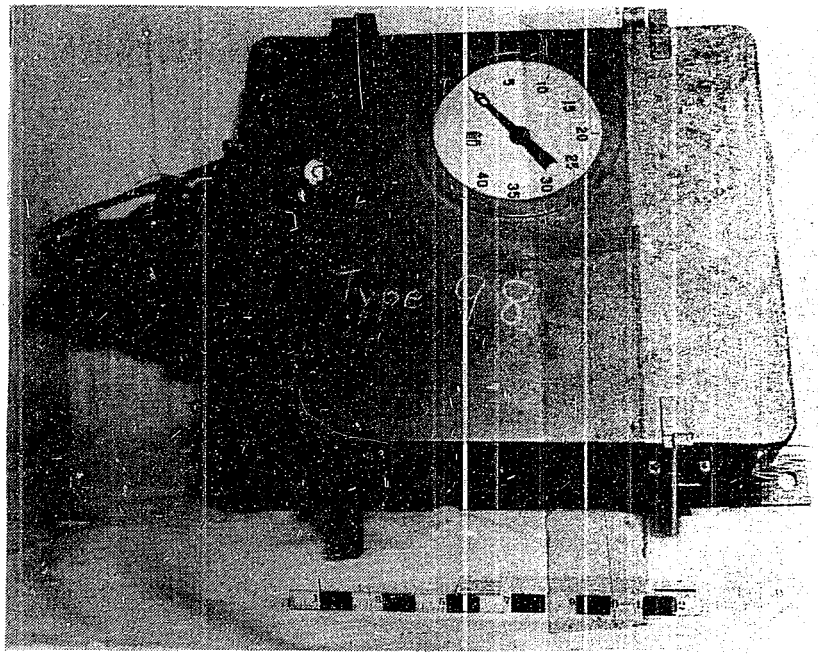

Figure 164
TYPE 98 LOG - PRESSURE RECEIVER (CLOSED)

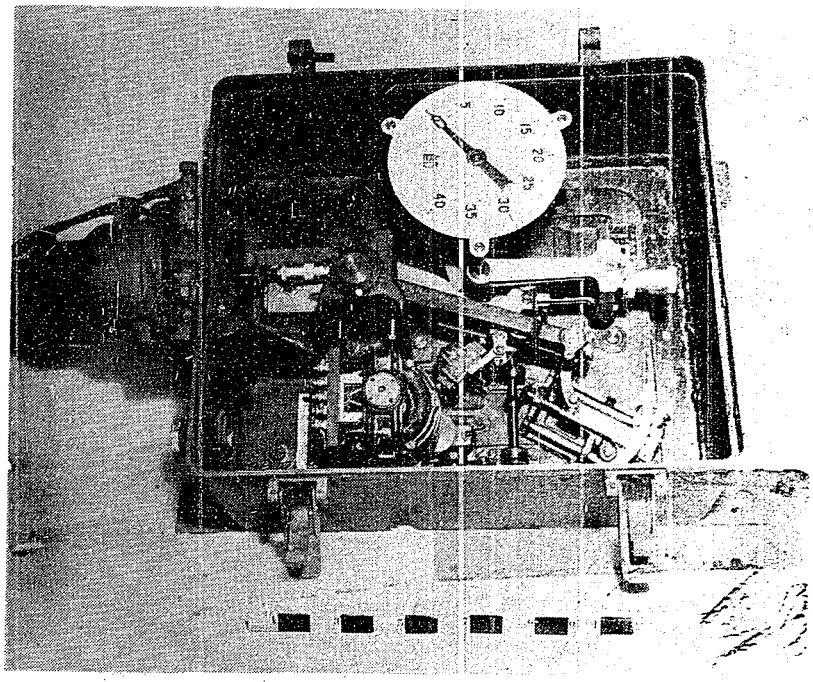

Figure 165
TYPE 98 LOG - PRESSURE RECEIVER (OPEN)

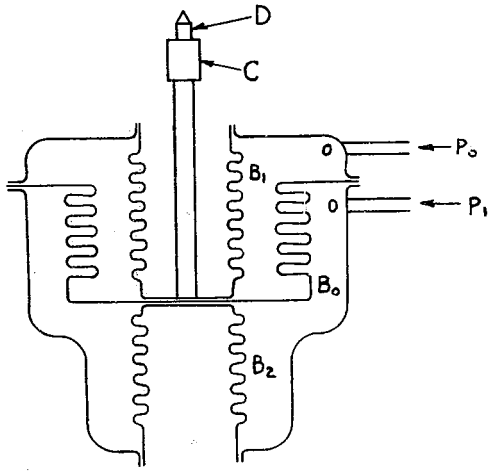

Figure 166
TYPE 98 LOG. - PRESSURE RECEIVER DIAGRAM

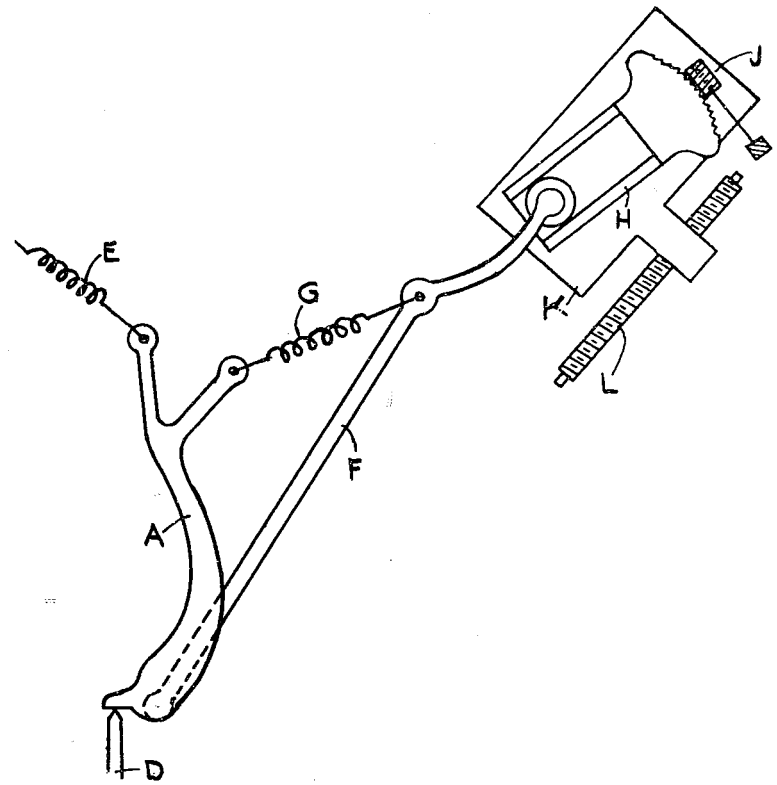

Figure 167
TYPE 98 LOG. - COMPENSATION DIAGRAM

be displaced regardless of the speed. If H is displaced at a certain angle with respect to K by moving the screw J, F will rotate by the displacement of K. Accordingly, this produces tension in the auxiliary spring G which operates on main lever A. When K moves downward with the increase in speed, and if H has been rotated in the clockwise direction from the center position, then F will also rotate in a clockwise direction with the increase in speed. The tension of G works in a direction to nullify E, so the indicated speed will be greater than when H is at a center position. Inversely, when H has been rotated in a counter-clockwise direction, the indicated speed will be less than the standard value.

The third correction device is the zero adjustment and is part C indicated in Figure 166. This regulates the length of lever D so that the speed meter needle points to zero when the ship is not in motion.

The auxiliary mechanism consists of sliding contacts shown in Figure 160, a follower receiver and speed indicator. The follower receiver is a selsyn motor which is connected to the follower (selsyn) transmitter which in turn is driven by the follower (capacitor) motor. (The follower motor and the follower transmitter are both mounted in the speed distance transmitter. The follower receiver is mounted in the pressure receiver and drives the cam C (Figure 159). It is also geared to the speed indicator in the pressure receiver.) The follower receiver is controlled by the sliding contact S (Figure 160) through the follower motor and follower transmitter. The follower receiver rotates at a constant speed ratio with respect to the follower motor (Figure 159). The follower motor is the source of power for balancing the main mechanism within this instrument.

The speed and distance transmitter (Figure 168 and 169) receives the speed information, which is in the form of the angle of rotation of the follower motor, from the pressure receiving device and this furnishes the power to drive the speed transmitter and a part of the distance integrating mechanism (Figure 160). Other parts contained in this transmitter are the speed and distance indicating device, speed receiver synchronizing device, and distance integrating device. The follower is the same type of capacitor motor described previously. All speed transmitters are selsyn motors. There are three of these: speed transmitter for the speed receiver, follower transmitter for the pressure receiving device, and speed transmitter for fire control.

The speed indicator synchronizing mechanism is necessary because of the gearing which exists between the follow-up motor and the speed indicators. The gearing is as follows:

104 revolutions of follow-up motor gives one knot

10 revolutions of follow-up transmitter gives one knot

1 revolution of speed transmitter (for F.C.) gives one knot

10 revolutions of speed transmitter gives one knot

The speed indicators are synchronized by turning the handle shown in lower right of Figure 169 counter-clockwise until all speed indicators read zero. (This mechanism operates through a differential gear.) As each speed indicator reads zero, contact within its housing automatically connects one leg of the selsyn secondary circuit across the primary circuit, which immediately stops rotation. Then rotating the synchronizing mechanism handle (Figure 169) in the clockwise direction until the pointer on the synchronizing dial (near handle, Figure 169) coincides with the master speed dial (Figure 169) puts all speed indicators in synchronism.

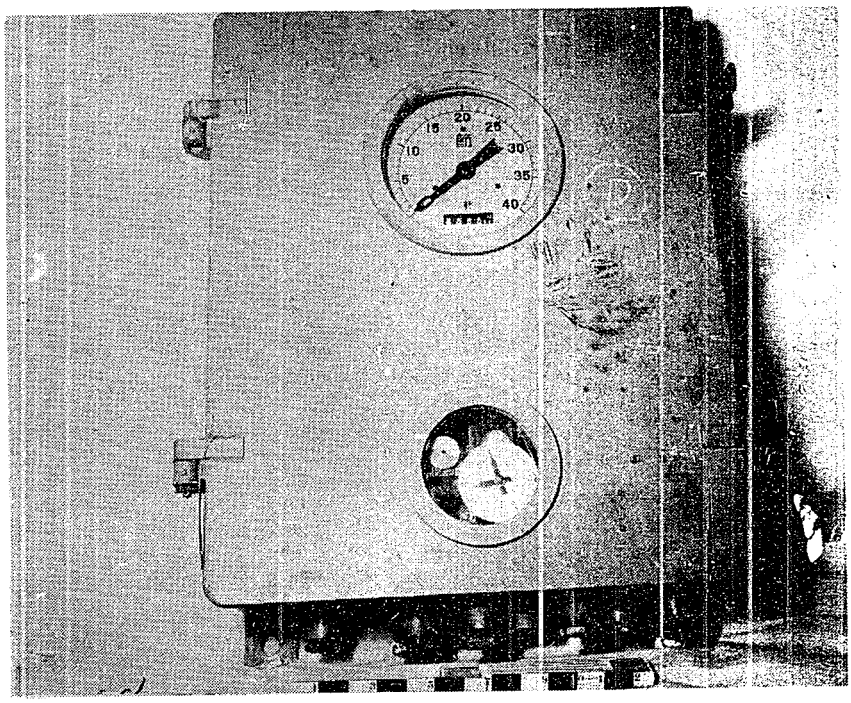

Figure 168
TYPE 98 LOG. - SPEED
AND DISTANCE TRANSMITTER (CLOSED)

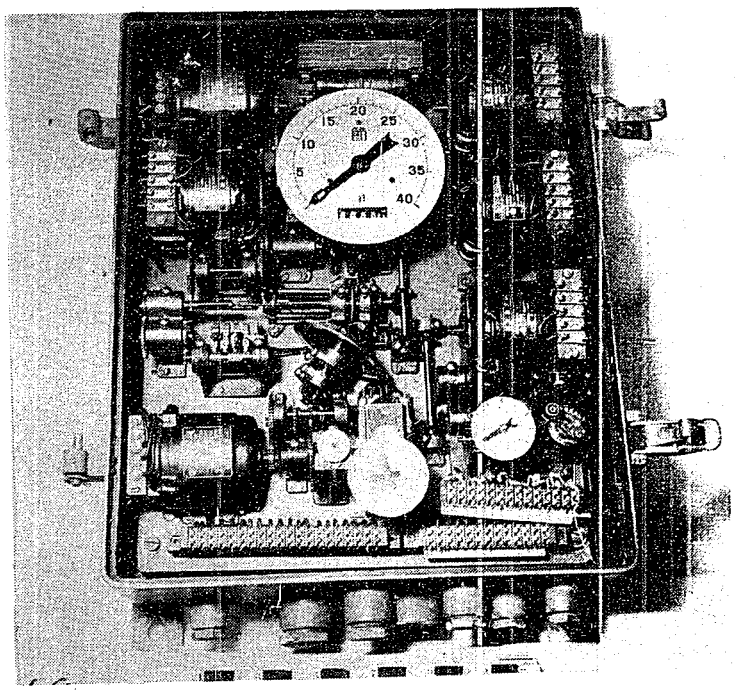

Figure 169
TYPE 98 LOG. - SPEED AND DISTANCE TRANSMITTER (OPEN)

The distance integrating device is the same as that described previously.

In order to facilitate the wiring of the speed and distance transmitter and the various receivers and to limit the extent of possible failures, junction boxes (Figure 170 and 171) have been used. They contain single throw knife switches, fuses, and groups of terminals. The boxes are watertight. Since the junction box for the speed transmitter must provide for the synchronizing circuits it has six poles and handles eight receivers per box. The junction boxes for distance receiver and fire control are five pole boxes and handle four receivers per box.

The condenser box (Figures 172 and 173) is a W.T. box containing phase shifting capacitors for the follow-up motor and the distance integrator constant speed motor (located in the speed and distance transmitter). There are three capacitors of 30 microfarads each, one for each motor and one spare.

The resistor box (Figures 174 and 175) is a W.T. box which contains the resistors for the follower motor and the constant speed motor and also the resistor which is inserted in the secondary circuits of the selsyn motors to prevent self-rotation and to provide protection in the event the lines to one or more of the receivers are grounded or shorted.

The speed meter (Figures 176 and 177) consists of a W.T. case containing a selsyn receiver (which makes one revolution for five knots), pointer (which is rotated by a selsyn through differential gearing), indicator dial, relays for synchronizing, lamp for dial illumination control and transformer for lamp voltage.

The pointer and the dial are made of plastic and are internally illuminated to facilitate visibility at night. Three lamps provide dial illumination. They are connected in parallel with the primary circuit of the selsyn motor through a transformer and a variable resistance. The synchronizing relay connects one leg of the selsyn secondary circuit to its primary circuit when the pointer is at zero thereby stopping the selsyn.

The range receiver (Figures 172 and 173) Model 1 consists of a waterproof case containing a selsyn motor which makes one revolution per 40 knots; three pointers (one driven from the selsyn through differential gearing, one which makes one revolution per 1,000 meters, and one which makes one revolution per 10,000 meters, the latter two rotating coaxially); a dial scale, a lamp and a rheostat. Illumination is the same as for the speed receiver.

The range receiver (Figures 176 and 177) Model 2 contains an indicating dial calibrated in nautical miles. This is a rotating, integrating meter. A luminescent paint is used on the dial of this instrument. This unit may be reset to zero setting.

When the pitot pressure varies irregularly due to the roll of the ship the instrument pointers hunt. To remedy this, the resistance of the hydraulic system is adjusted. This acts as a regulating valve.

The air trap collects and discharges the air that enters the tube system.

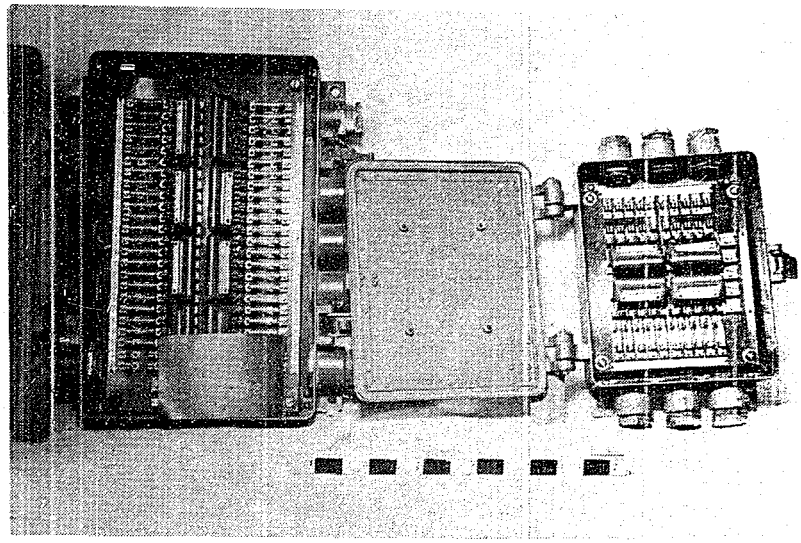

Figure 170
TYPE 98 LOG - SPEED AND DISTANCE INDICATOR DISTRIBUTION BOXES (OPEN)

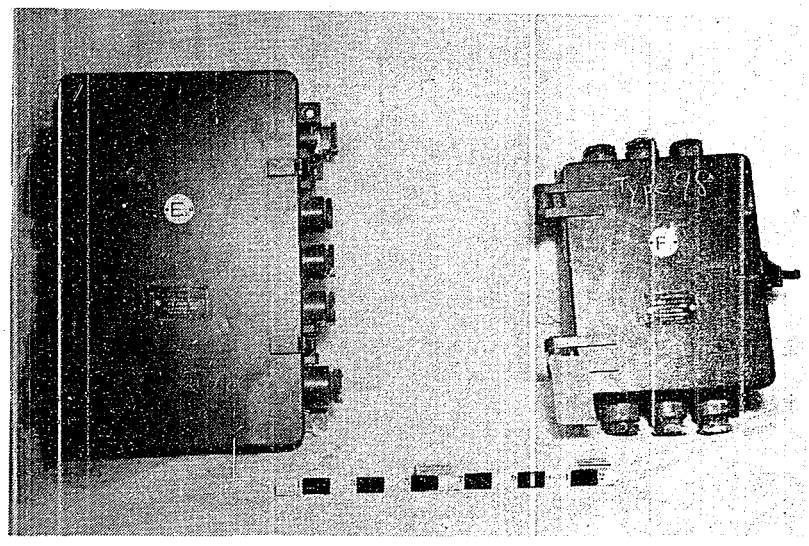

Figure 171
TYPE 98 LOG - SPEED AND DISTANCE INDICATOR DISTRIBUTION BOXES (CLOSED)

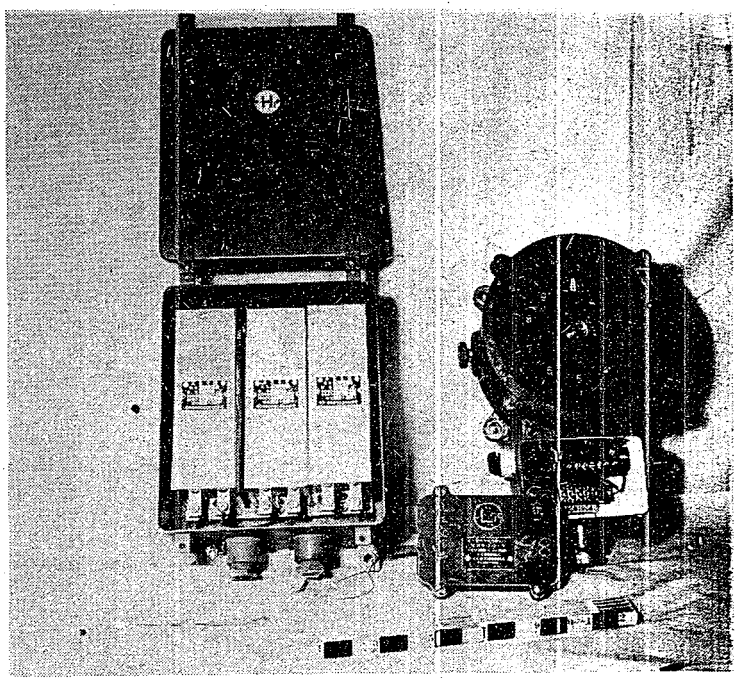

Figure 172
TYPE 98 LOG - CONDENSER BOX
AND DISTANCE INDICATOR (OPEN)

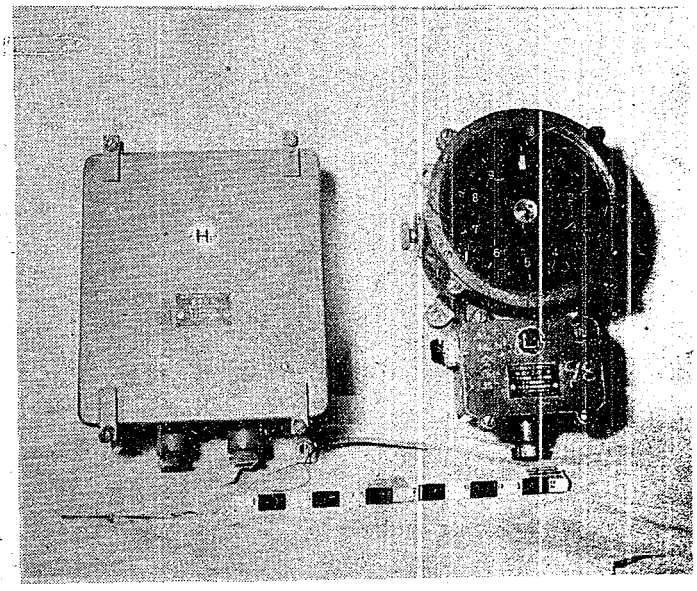

Figure 173
TYPE 98 LOG - CONDENSER BOX
AND DISTANCE INDICATOR (CLOSED)

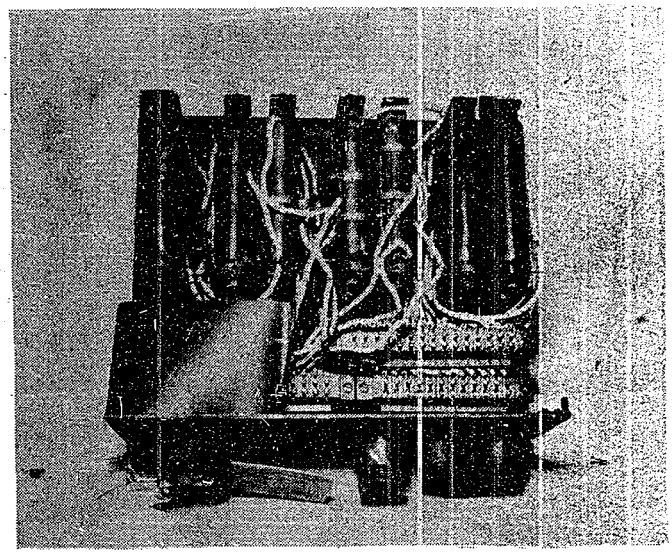

Figure 174
TYPE 98 LOG - RESISTANCE BOX (OPEN)

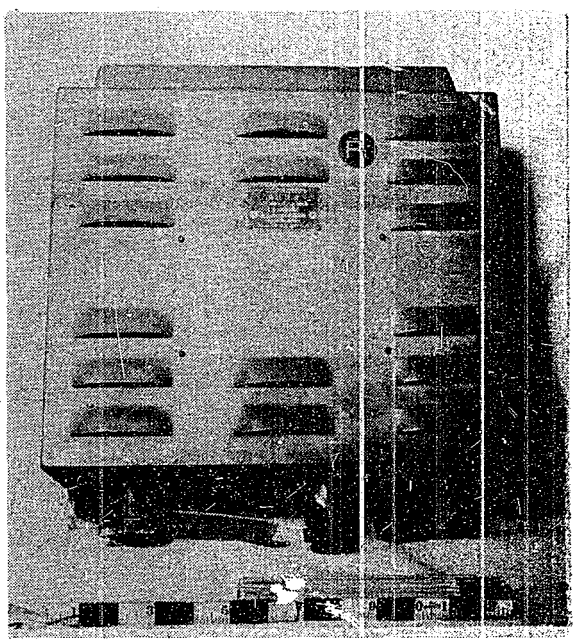

Figure 175
TYPE 98 LOG - RESISTANCE BOX (CLOSED)

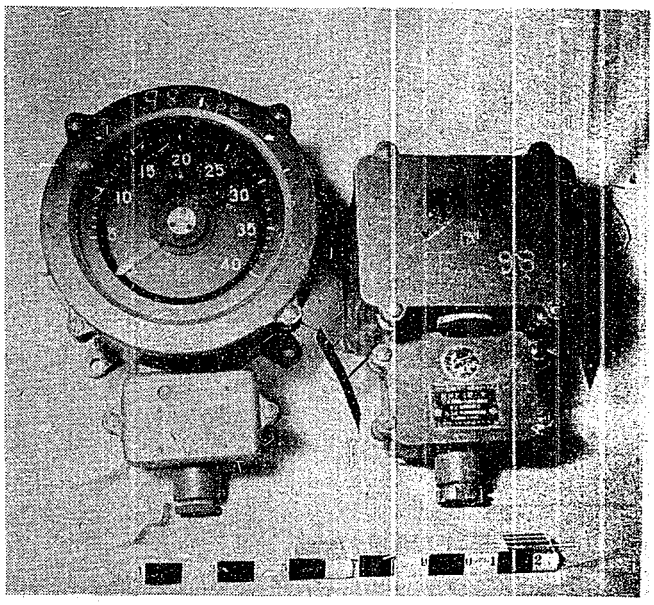

Figure 176
TYPE 98 LOG - SPEED AND DISTANCE INDICATOR (CLOSED)

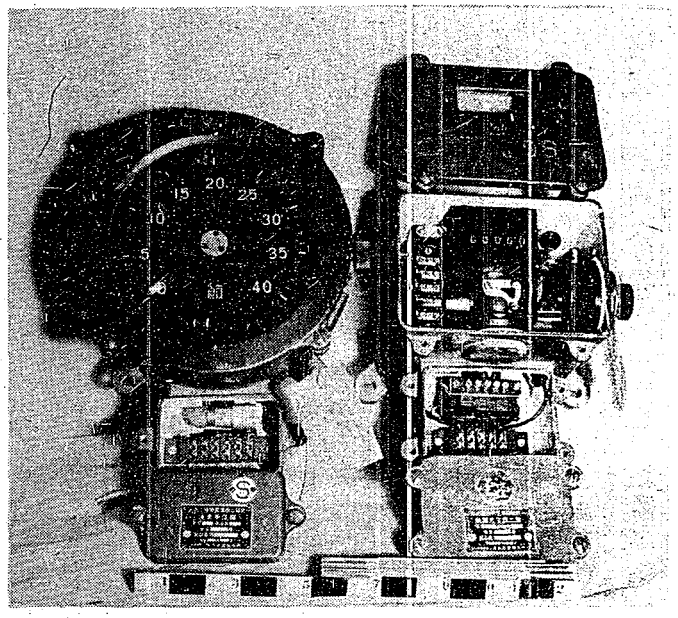

Figure 177
TYPE 98 LOG - SPEED AND DISTANCE INDICATOR (OPEN)

Instruction for Operation - If, after closing the main power switch, the clock (for controlling speed of constant speed motor) in the distance integrating device does not start, it may be started by using the manual starter.

If the readings of the speed receivers do not appear correct, they can be synchronized with the synchronizer.

The zero adjustment of speed meters is made using adjustment C.

If, while the ship is underway, the instruments hunt badly, the hunting may be reduced by decreasing the opening of the regulator valve.

Method of Adjustment - Calibration of this equipment is normally necessary after installation in the ship. Adjustments at the factory are made assuming a pitot constant of one. The pitot constant varies with the configuration of the hull and the location of pitot tube and piping.

The error in the equipment must be determined prior to adjustments by making at least two round trips over a measured course. The calculated average speed for each complete run (both directions) is used as the standard for that speed. The runs are made at two different speeds.

The characteristic adjustment curves A and B (Figure 179) are supplied with each equipment. The percentage error determined in the trial runs is applied to the adjustment device in the pressure receiver.

(1) "A" adjustment - Speed values

Referring to Figure 179, when the true speed values are "v_1", and "v_2" and if their errors have values corresponding to points "a" and "b" respectively, a new "A" adjustment "A_1" may be obtained by drawing a perpendicular line from the intersection of curve "A" and a horizontal line drawn through point "C", which is determined by the intersection of a straight line drawn through points "a" and "b" and the zero ordinate.

(2) "B" adjustment

Obtain points "d" and "e", which are the intersections of 40 knot ordinate and line "ab" and horizontal line passing through "c", respectively, and locate point d' so that de = d'e'. Then the new "B" adjustment value "B_1" can be obtained by drawing a perpendicular from the intersection of horizontal line passing through d_1 and "B" curve. Where the above adjustments have been completed, additional test runs to check them are recommended. The schematic diagram of this equipment is given in Figure 180.

b. Impeller (Type 92) Log

This log operates basically from an impeller. Logs employing the same principle of operation are presently in operation in the U. S. Navy. The accuracy of this log has been reported by the Japanese as maximum error for distance ± 2%. This accuracy is considered good. The impeller unit of this log required considerable maintenance and in some instances had to be replaced as often as once per month. The workmanship and general quality and design of the instrument appears good, with the possible exception of the impeller.

This log utilizes an impeller which is mounted below the hull of the ship, and whose speed of rotation is a function of ship's speed. The impeller, by turning a contactor, modulates an oscillator-amplifier

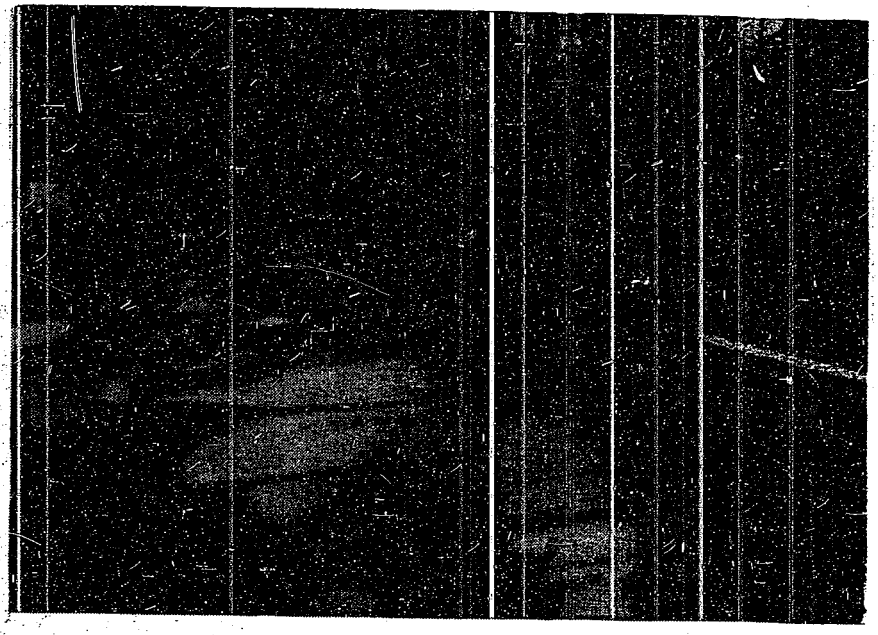

Figure 178
TYPE 98 LOG - PITOT TUBE

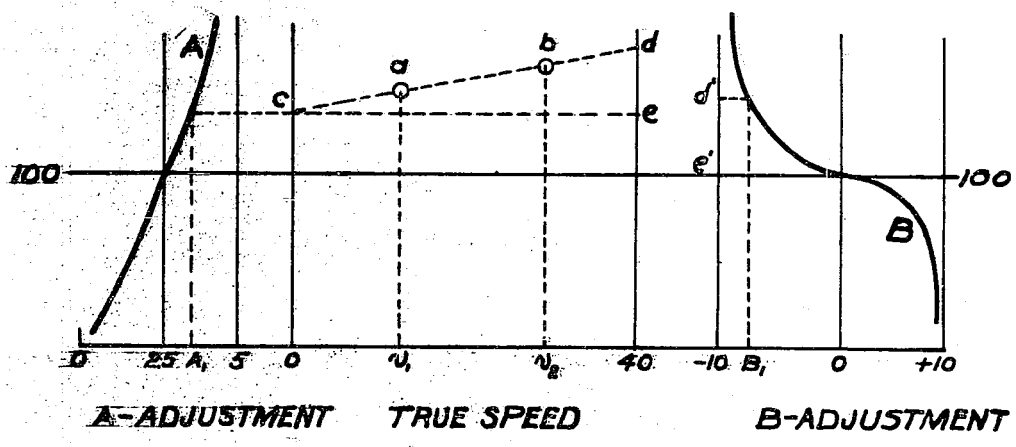

Figure 179
TYPE 98 LOG - CALIBRATION CURVES

in a manner such that the number of amplified A.C. impulses corresponds to the number of revolutions of the impeller. There are two types of impellers, the difference being in pitch, as follows:

(1) 4000 revolutions per sea mile; used in ships whose speed lies within the range of 0-30 knots.

(2) 3000 revolutions per sea mile; used in ships whose speed lies within the range of 0-40 knots.

The A.C. pulses control a polarized relay which generates D.C. pulses from a D.C. power source. The operation of the polarized relay is such as to generate a revolving field for an impulse motor.

The impulse motor operates the speed transmitter directly and the distance transmitter in conjunction with the constant speed motor.

The accuracy of the instrument in laboratory or tank tests was reported by the Technical Department of the Japanese Ministry to be as follows:

Speed ± 0.2 knot

Distance ± 0.1%

It is estimated however, that the accuracy aboard ship is approximately

Speed ± 2%

Distance ± 2%

The indicating instrument, insofar as range and scales are concerned, are similar to those described for the Type 98 log.

The standard equipment per ship is listed in Table XII.

A simplified circuit diagram of the log is shown in Figure 181. (For complete schematic see Figure 182.) The impeller mechanism short circuits terminals one and two of the amplifier once for each revolution. The first stage of the amplifier is a 300 KC oscillator and detector. The impeller shorting action modulates the 300 KC oscillator signal which, is detected and then amplified by the second and third amplifier stages.

The output of the amplifier feeds into one of the two polarized relay units, activating the relay armature so as to contact one pole and then the other, one contact per cycle. The relay armature is connected to the negative side of the D.C. line. The D.C. pulses from the polarized relay drive the impulse motor.

The impulse motor is a self-starting unit with four pole rotor as shown in Figure 183. There are two fields (A and B), as shown in Figure 183, which are excited alternately from the polarized relay. The rotor turns through 45 degrees for each pulse from the polarized relay. The speed range of the impulse is from 0-500 RPM. Eight pulses are required per revolution.

The impulse motor is geared directly to the speed transmitter. The speed transmitter is a permanent magnet D.C. generator. The speed transmitter excites the speed indicators which are D.C. voltmeters. Referring to Figures 182 and 184, the impulse motor drives the distance transmitter (selsyn) through the differential gears. The constant speed motor also drives the speed transmitter through the

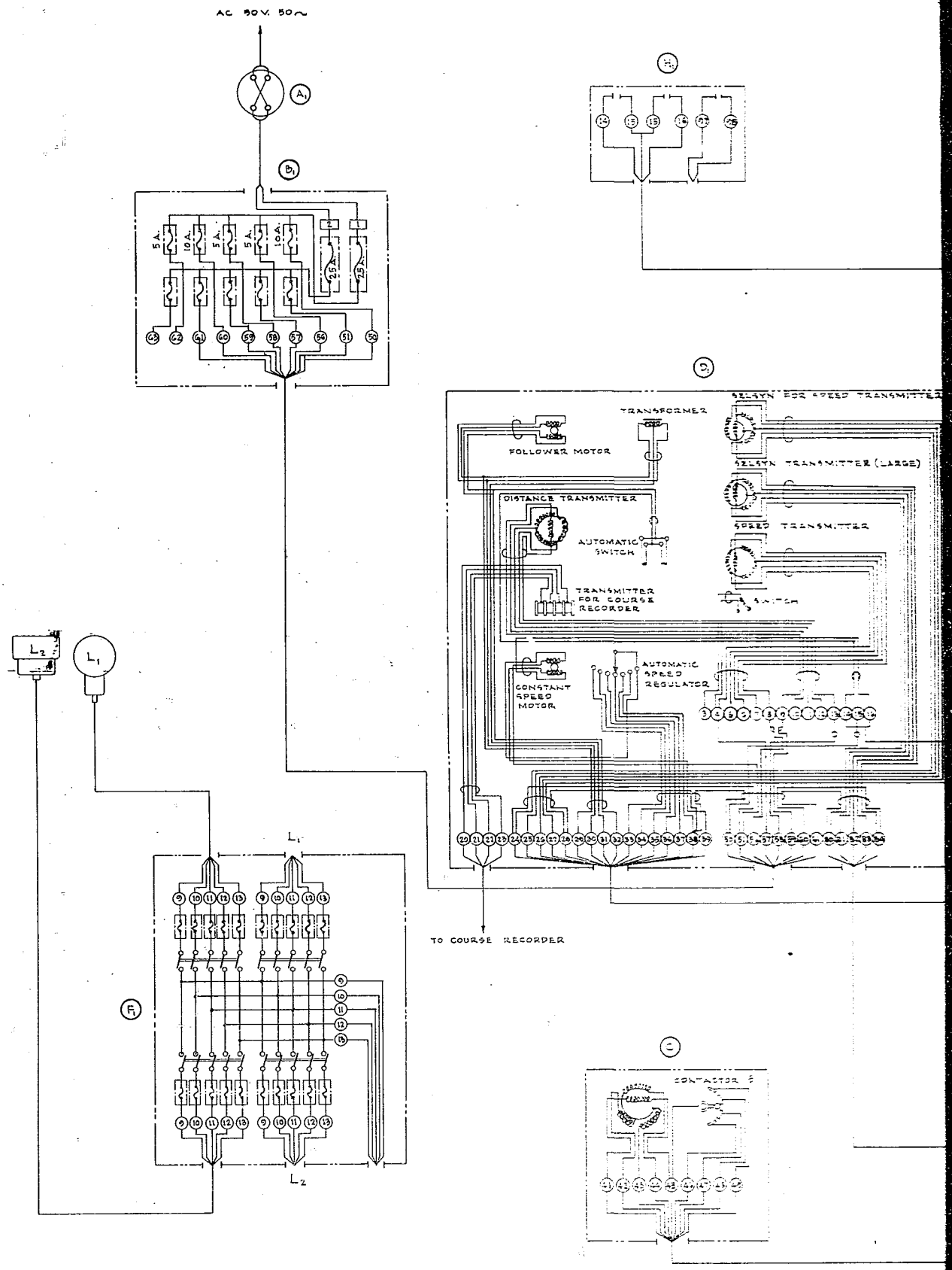

Figu
TYPE 98 LOG -

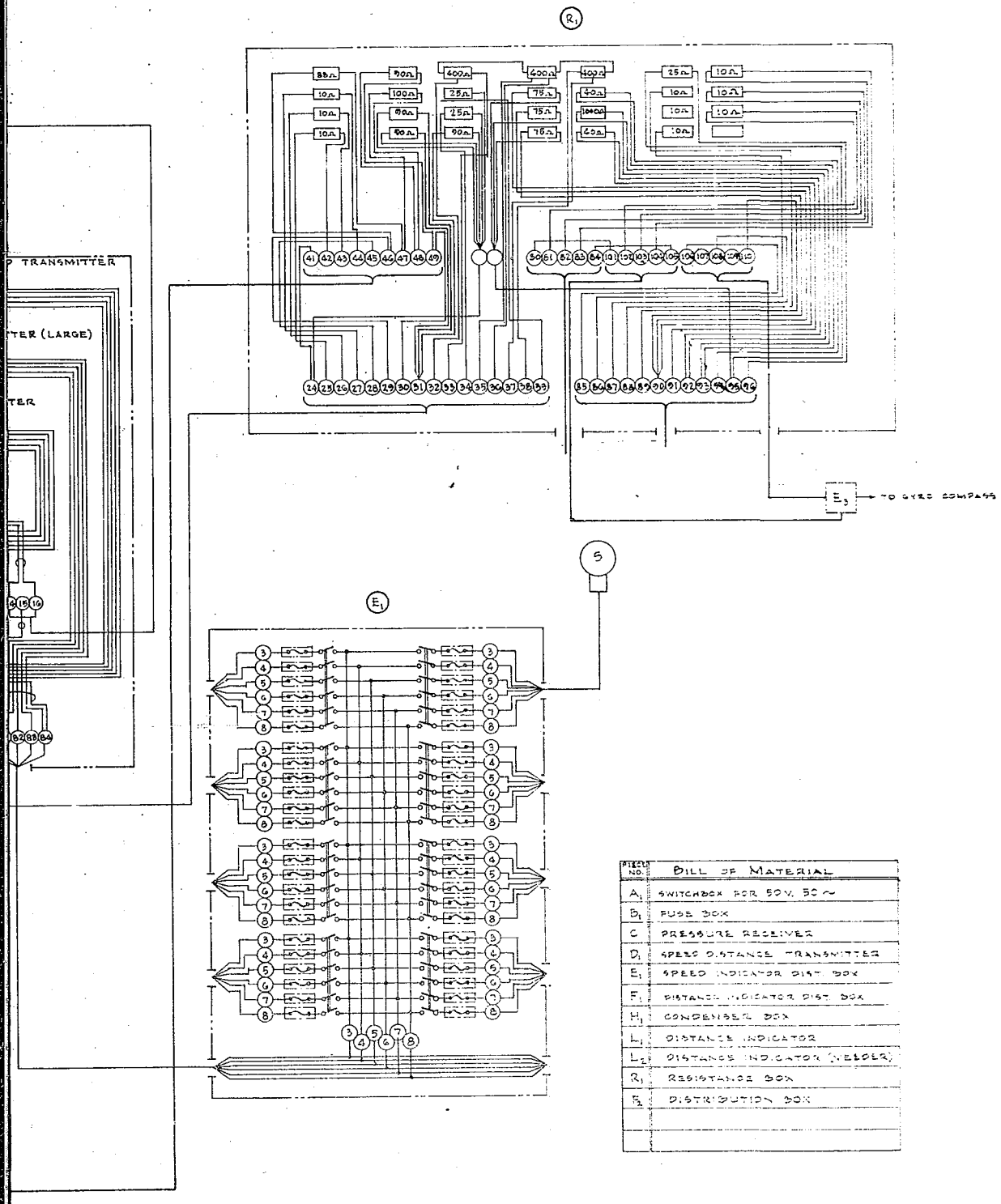

ITEM NO.	BILL OF MATERIAL
A_1	SWITCHBOX FOR 50 V. 50 ~
B_1	FUSE BOX
C	PRESSURE RECEIVER
D_1	SPEED DISTANCE TRANSMITTER
E_1	SPEED INDICATOR DIST. BOX
F_1	DISTANCE INDICATOR DIST. BOX
H_1	CONDENSER BOX
L_1	DISTANCE INDICATOR
L_2	DISTANCE INDICATOR (HELPER)
R_1	RESISTANCE BOX
F_2	DISTRIBUTION BOX

Figure 180
E 98 LOG. - CIRCUIT DIAGRAM

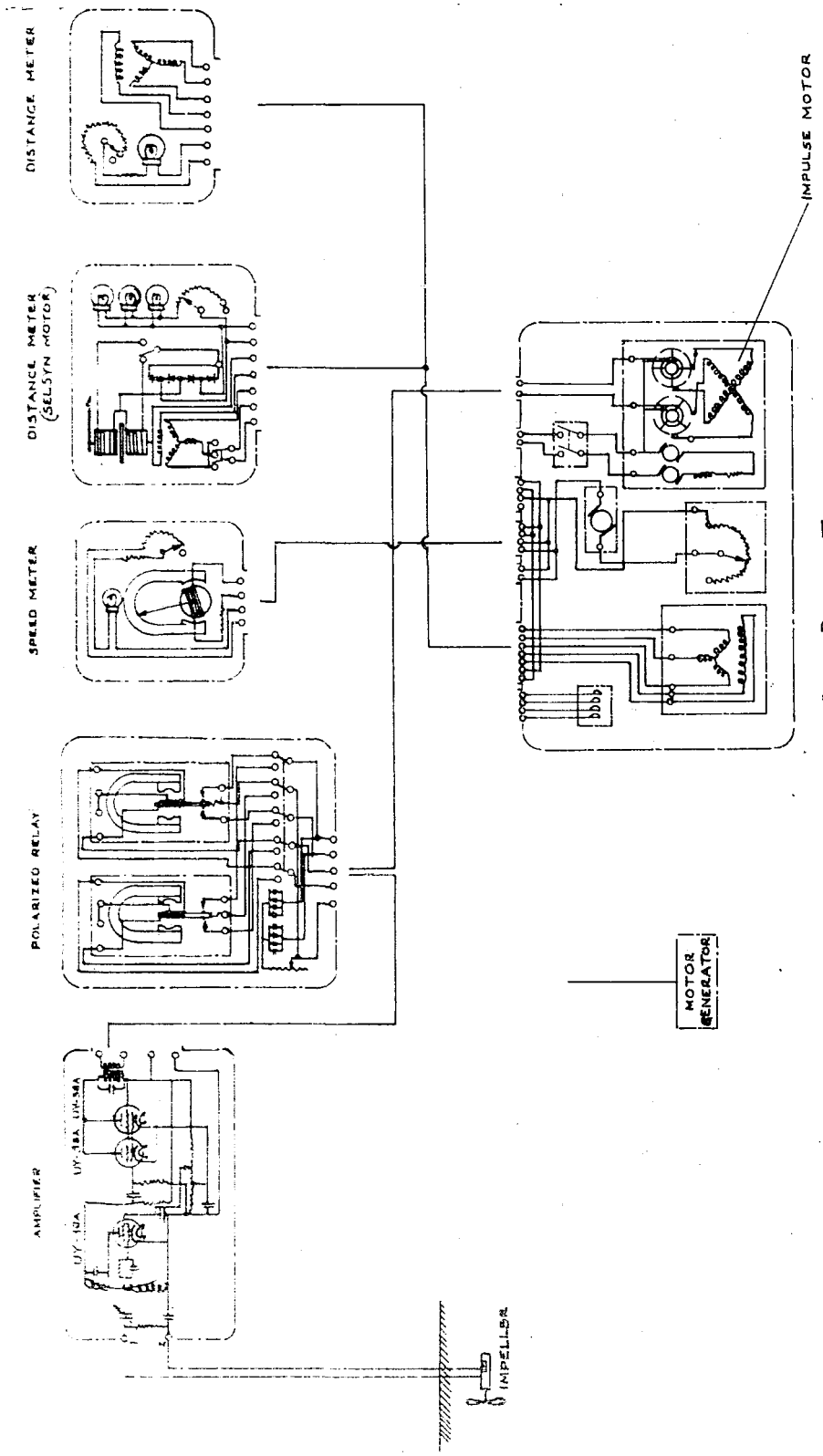

Figure 181
TYPE 92 LOG - CIRCUIT DIAGRAM

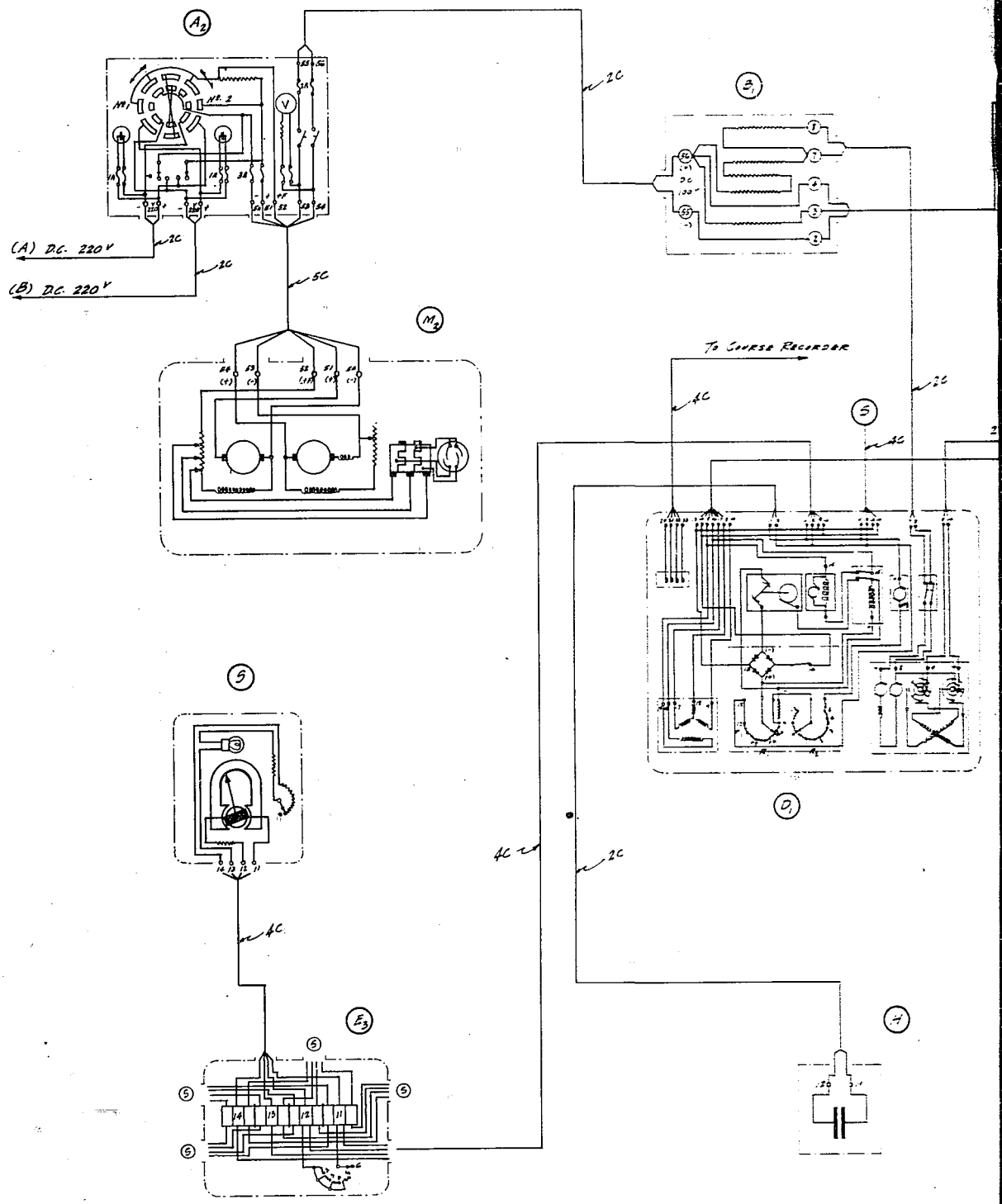
A2
B1
M2
S
D1
E3
H
(A) D.C. 220V
(B) D.C. 220V
2C
5C
4C
To Course Recorder

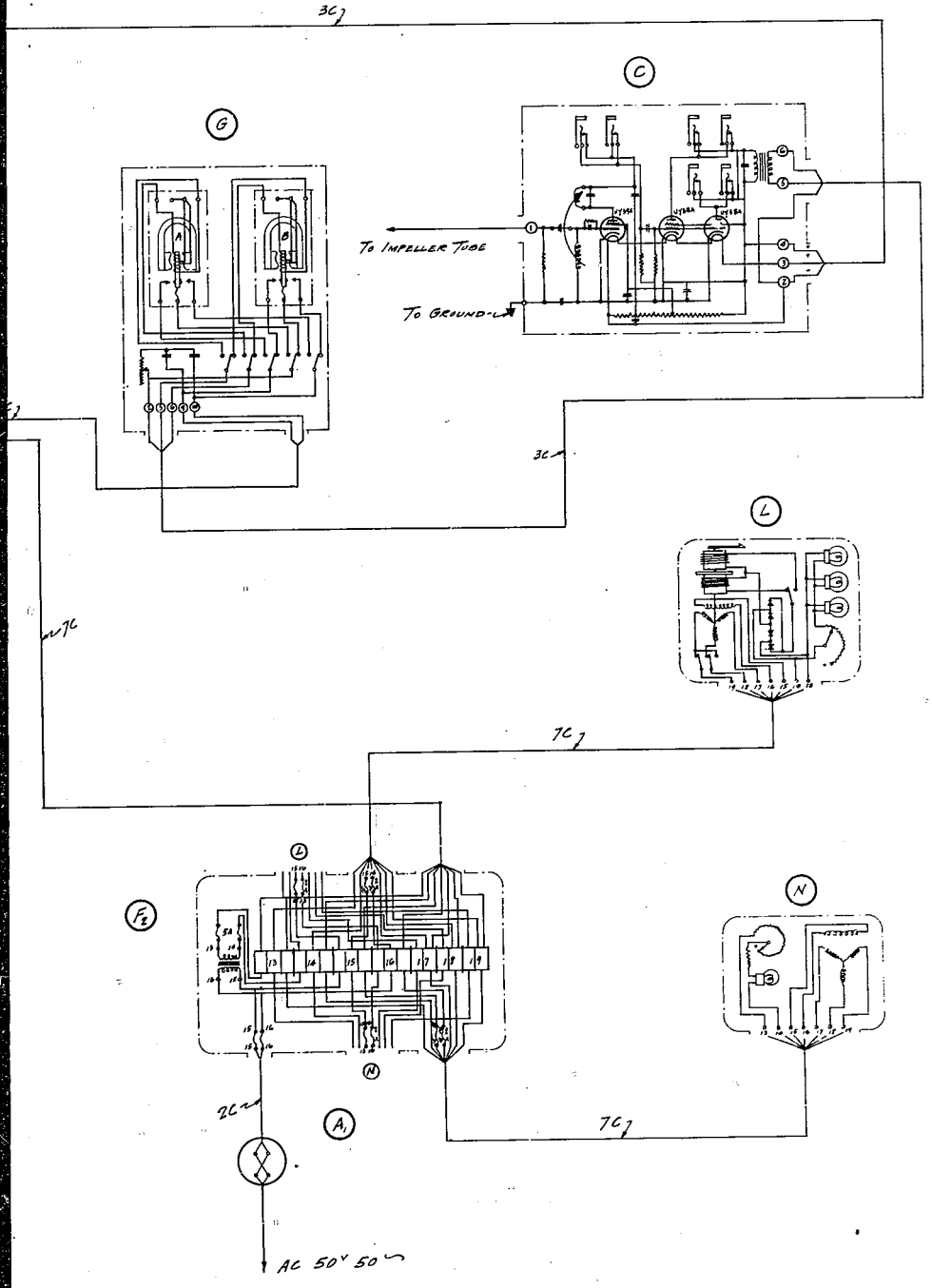

A_1	Switch Box For Selsyns
A_2	Starter For M G
B_1	Resistance Box
C	Amplifier Box
D_1	Speed Distance Transmitter
E_3	Junction Box For Speed Indicator
G	Relay Box
H	Condenser Box
F_2	Junction Box For Distance Indicator
M_2	Motor Generator
N	Distance Indicator (Master Type)
S	Speed Indicator

Figure 182
LOG. - CIRCUIT DIAGRAM

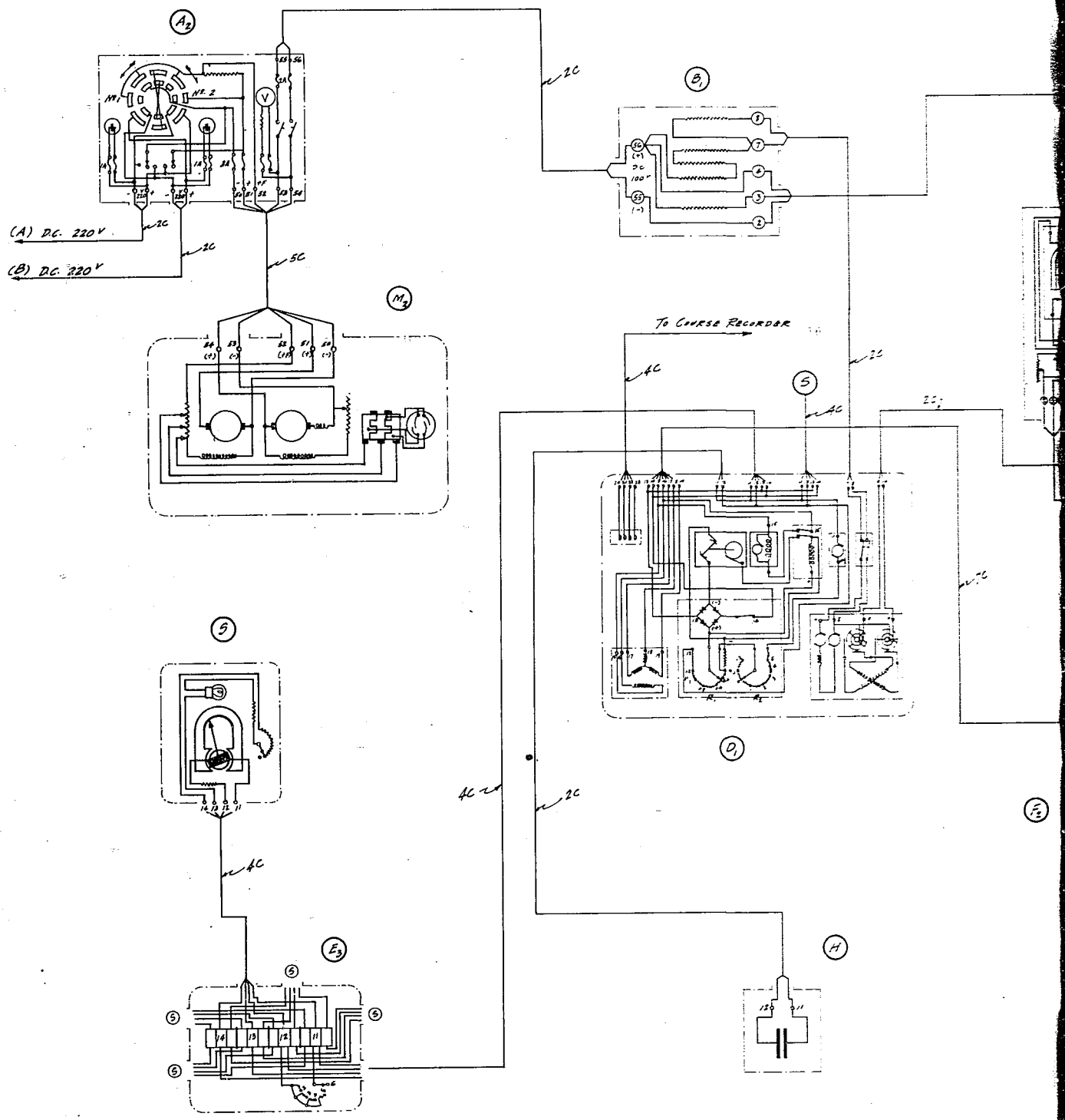

Figure 182
TYPE 92 LOG. - CIRCU

Table XII
List of Parts for Type 92 Log

Symbol	Name of Part	Number per Set
A_1	Switchbox	1
A_2	Starter for M.G.	1
B_1	Resistance Box	1
C	Amplifier	1
D_1	Speed and Distance Transmitter	1
E_3	Branch Compensator Box	1
F_2	Junction Box for Distance Indicators	1
G	Relay Box	1
H	Condenser	1
L	Distance Indicator	1
N	Distance Indicator	1
M_2	Motor Generator	1
S	Speed Indicator	6
	Cable-Amplifier to	
	Impeller	1
	Seacock	1
	Impeller Tube	1
	Set of Spares	1

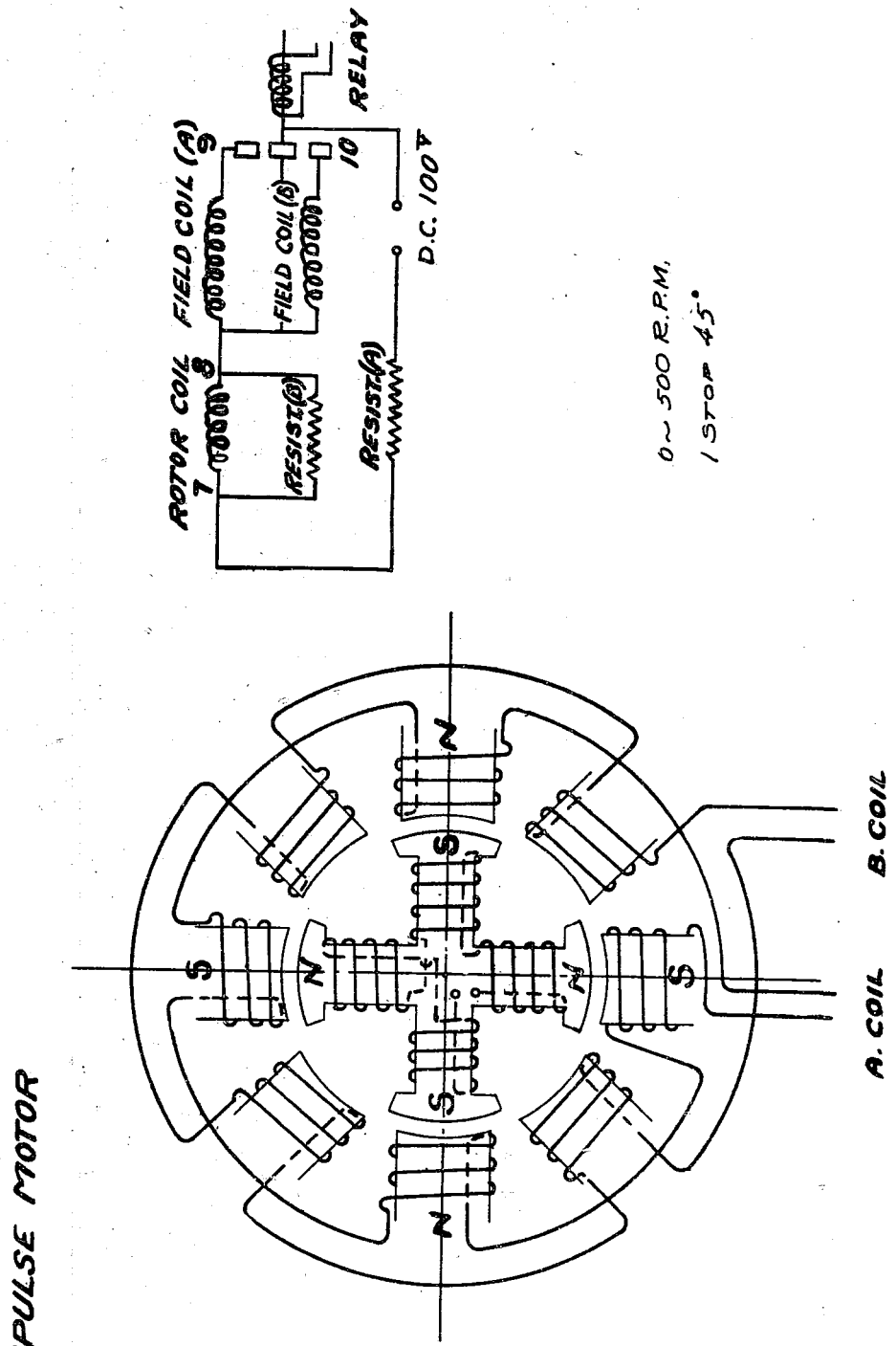

Figure 183
SCHEMATIC TYPE 92 LOG - IMPULSE MOTOR

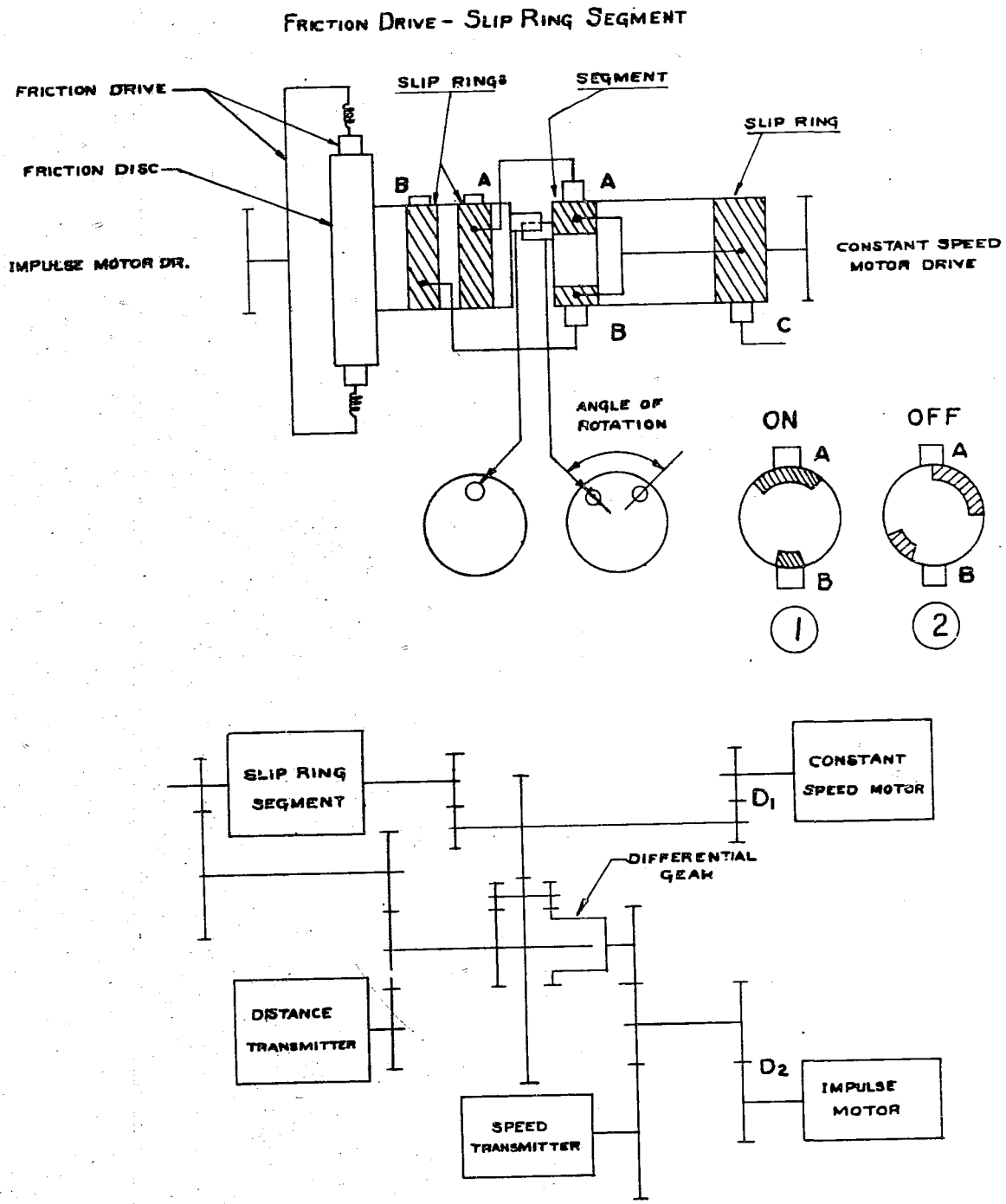

Figure 184
TYPE 92 LOG - DRIVE GEAR SYSTEM

differential gears. The slip ring and segment unit, which is both a contact maker and friction device, is geared directly to the distance transmitter and also to the differential gear system. The slip ring and segment unit is referred to by the manufacturer as a "friction correction" and "friction regulating" device.

The constant speed motor drives the slip ring and segment unit. The impulse motor drives the friction brushes which ride on the friction disc (Figure 184) which in turn is directly connected to the two principal slip rings. Two pins couple the "slip ring" and "segment" sections so as to make the "OFF", "ON" connections as indicated in "1" and "2" in Figure 184. The segments in the "ON" position complete the circuit through brushes "A" and "B" and the contact maker shown in Figure 182.

The contact maker closes the circuit to the constant speed motor (thereby starting it) and also energizes the rectifier (Figure 182) through the rheostat R_1.

Referring to Figures 182, 184 and 185, the gear ratio "D", is a distance correction, the gear ratio at "D_2" a distance and speed correction, "R_1" a speed correction and "R_2" a speed correction.

The equipment shown in Table XI is connected as shown in Figure 182. The construction and use of the principal parts is as follows:

(1) Power switch

This is a rotary snap switch, double pole, single throw and connects the 50 volt, 50 cycle supply to the junction box for distance indicators (Figures 186 and 187).

(2) Starter for M.G.

This item, Figures 188, and 189 provides for starting the system M.G. from the ship's 220 volt D.C. line and for metering, fusing and switching the 100 volt D.C. output of the M.G. to the log system.

(3) Resistance box

The dropping resistors for the rotor and fields of impulse motor, shunt for rotor of impulse motor and dropping resistor for filament circuit of the amplifier are contained in this case.

(4) Amplifier

The circuit and tube complement are shown in Figure 182. The construction is indicated in Figures 190, 191 and 192. This unit contains the oscillator, amplifier and detector which are the source of control power for the polarized relay. The source of input control for the amplifier is from the impeller.

(5) Speed and distance transmitter

The principal components of this unit are--impulse motors, relay, speed transmitter, distance transmitter, rectifier and two compensation (calibration) rheostats. The construction of this unit is shown in Figures 193, 194, and 195. (Note: Figure 194.)

(6) Branch compensator box - (E_3)

Figures 188, and 184 are photographs of this unit. It serves

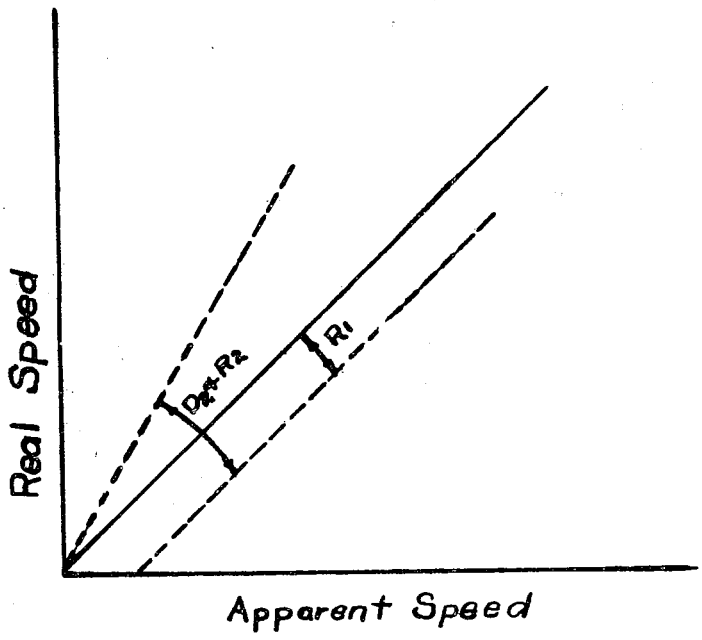

D_1 Distance Correction
D_2 Distance and Speed Correction
R_1 Speed Correction
R_2 " " " "

Figure 185
TYPE 92 LOG - CORRECTION CURVES

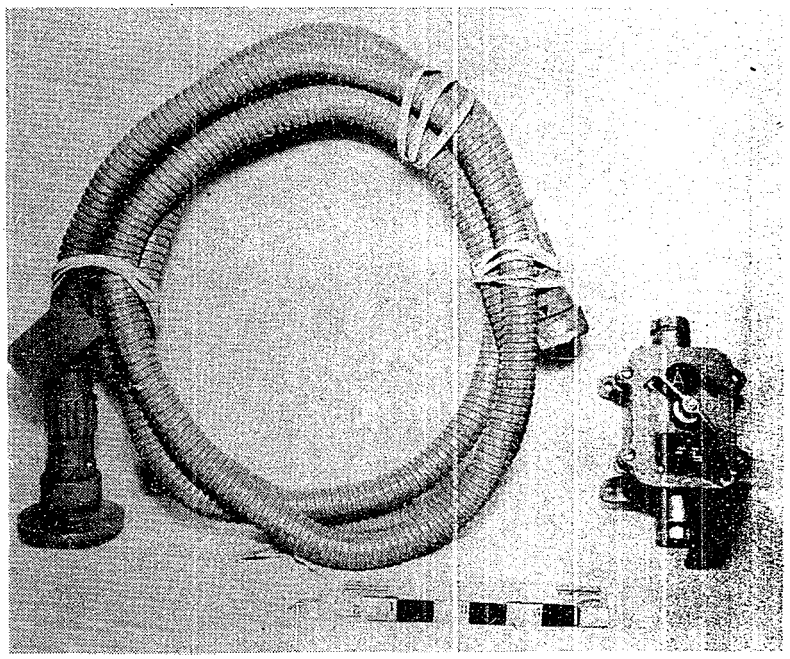

Figure 186
TYPE 92 LOG - SWITCH BOX AND IMPELLER CABLE
(SWITCH BOX CLOSED)

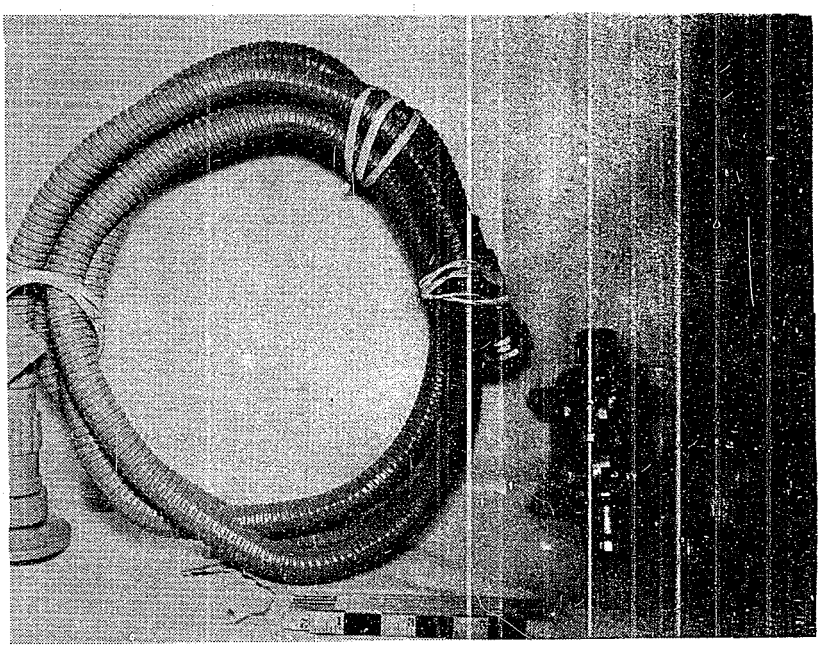

Figure 187
TYPE 92 LOG - SWITCH BOX AND IMPELLER CABLE
(SWITCH BOX OPEN)

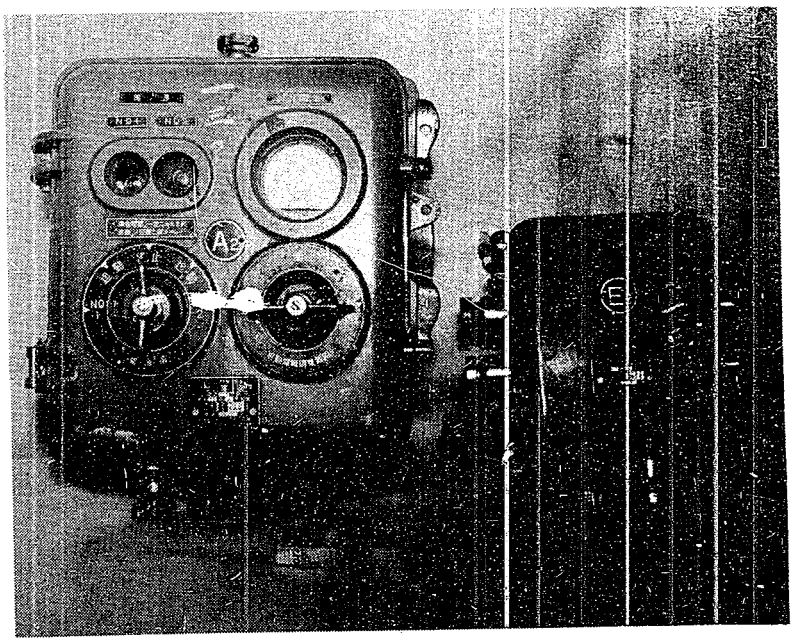

Figure 188
TYPE 92 LOG - M.G. STARTER AND BRANCH COMPENSATOR BOXES (CLOSED)

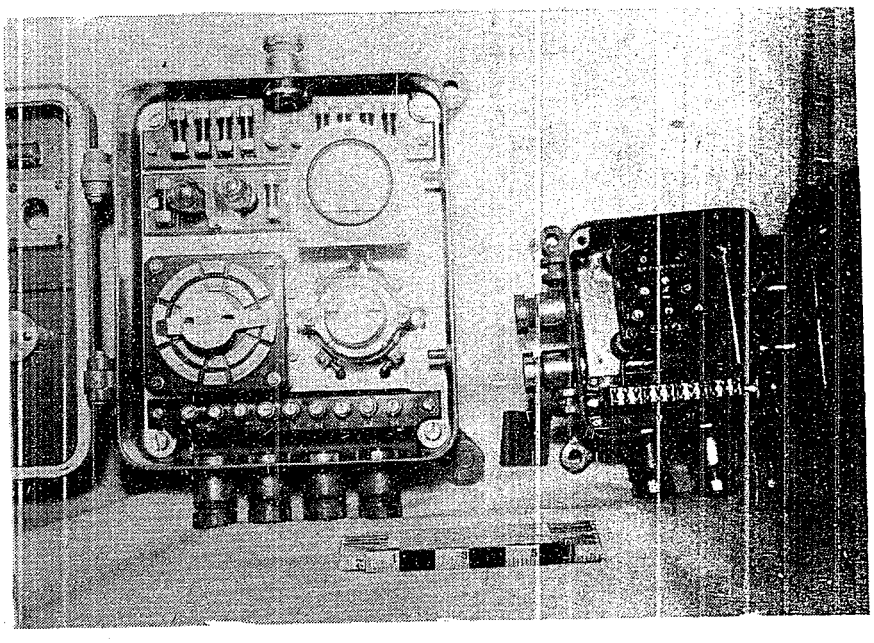

Figure 189
TYPE 92 LOG - M.G. STARTER AND BRANCH COMPENSATOR BOXES (OPEN)

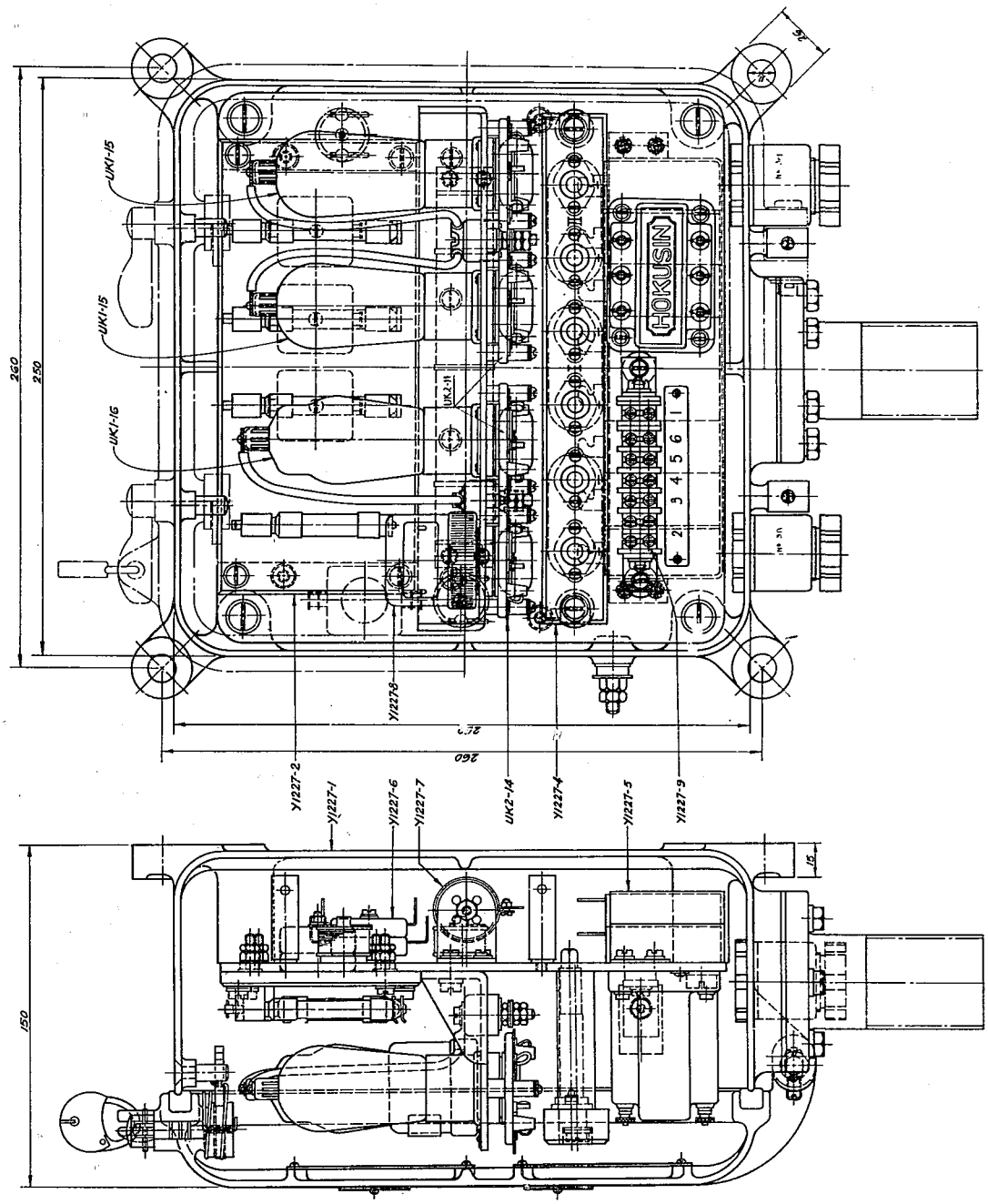

Figure 190
TYPE 92 LOG - AMPLIFIER - ASSEMBLY

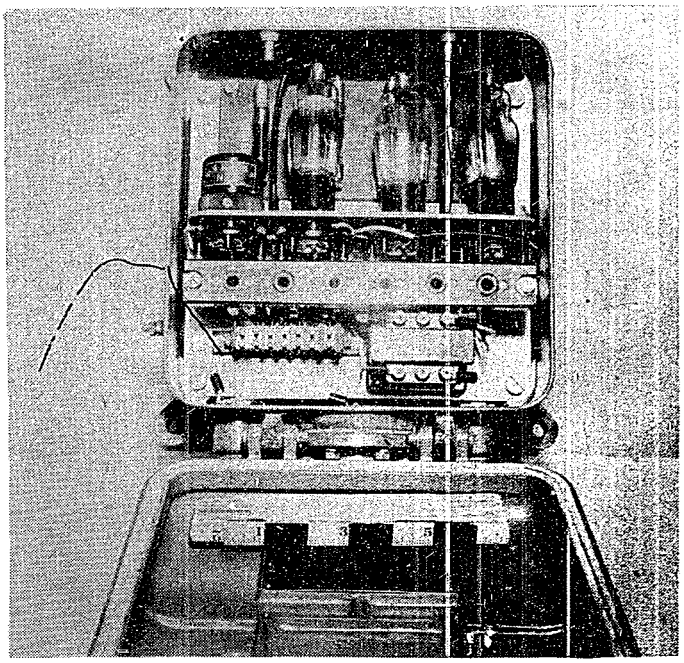

Figure 191
TYPE 92 LOG - AMPLIFIER (OPEN)

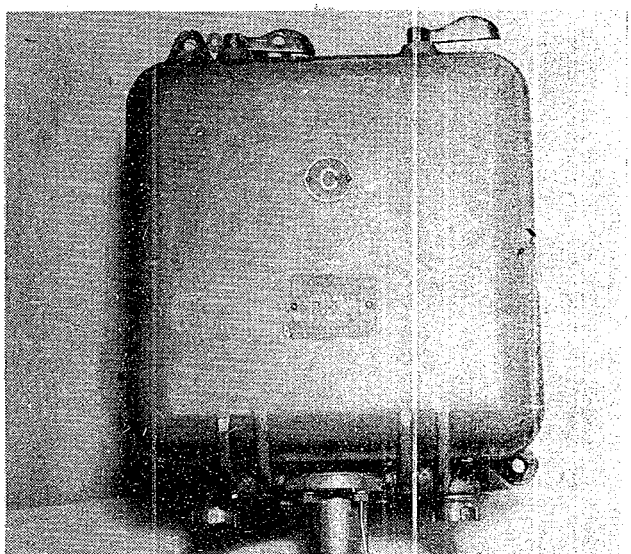

Figure 192
TYPE 92; LOG - AMPLIFIER (CLOSED)

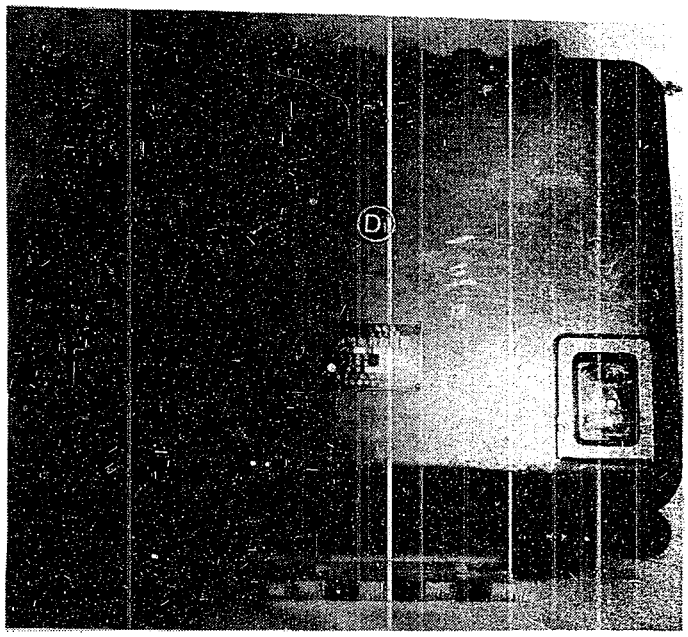

Figure 193
TYPE 92 LOG. - SPEED
AND DISTANCE TRANSMITTER (CLOSED)

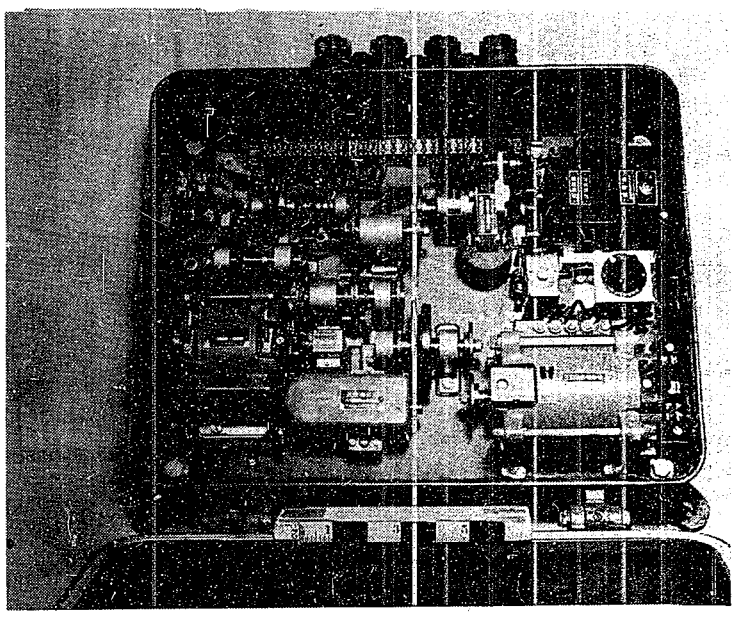

Figure 194
TYPE 92 LOG - SPEED AND
DISTANCE TRANSMITTER (OPEN)

as a junction box for the speed indicators and also contains a compensating rheostat which is connected across the output of the speed transmitter and is adjusted to correspond with the number of indicators connected across the speed transmitter.

(7) Junction box for distance indicators - (F-2)

This unit is illustrated in Figures 196, and 197. It is the junction box for the 50 volt, 50 cycle input to the log system from the ship's supply. It also contains a step-down power transformer and fuses for power supply to the low voltage rectifier. This unit is primarily a junction box for all distance indicators.

(8) Polarized relay

The polarized relay generates the D.C. pulses which provide the rotating field for the impulse motor. The armature of the relay is connected to the negative side of the 100 volt D.C. M.G. described above. The two contacts are connected to the two fields and rotor of the impulse motor per Figure 181 and 183. The relay is actuated by the A.C. pulses from the amplifier. Two relays are provided in this unit with changeover switch, Figures 198, 199 and 200. The construction of the unit is shown in detail in Figure 200.

(9) Condenser - (H)

Figures 196 and 197 describe this unit. It is a filter condenser across the output of the speed transmitter. This is apparently an electrolytic type of condenser inasmuch as the testing instructions prohibit testing with a meger, add precautions to check polarity, and prohibit use in an ambient in excess of 50°C.

(10) Distance indicator - (N)

This unit is a Veeder Type counter as illustrated in Figures 201, 202 and 203. It indicates total distance and is driven by a selsyn receiver from the distance transmitter. The instrument is provided with a reset mechanism and an illumination control rheostat as shown in Figure 203.

(11) Motor generator - (M_2)

The motor generator operates from the ship's 220 volt D.C. supply and generates 100 volt D.C. which is utilized directly for plate supply in the amplifier and through dropping resistors for amplifier filament supply and for the impulse motor (through the polarized relay). Figure 204 is a photograph of the unit. Figure 182 shows schematically its function in the system.

(12) Distance indicator - (L)

This instrument is used for mine laying and other operations where it is essential to measure relatively short distances accurately for spacing purposes, etc. The instrument is illustrated in Figures 201 and 202. Figures 205 and 206 are assembly drawings of the instrument. The long pointer makes one revolution for 1000 meters and the short pointer, one revolution for 10,000 meters. The pointers are driven by a selsyn receiver which, in turn, is driven by the distance transmitter. The instrument contains a magnetic clutch to facilitate placing it

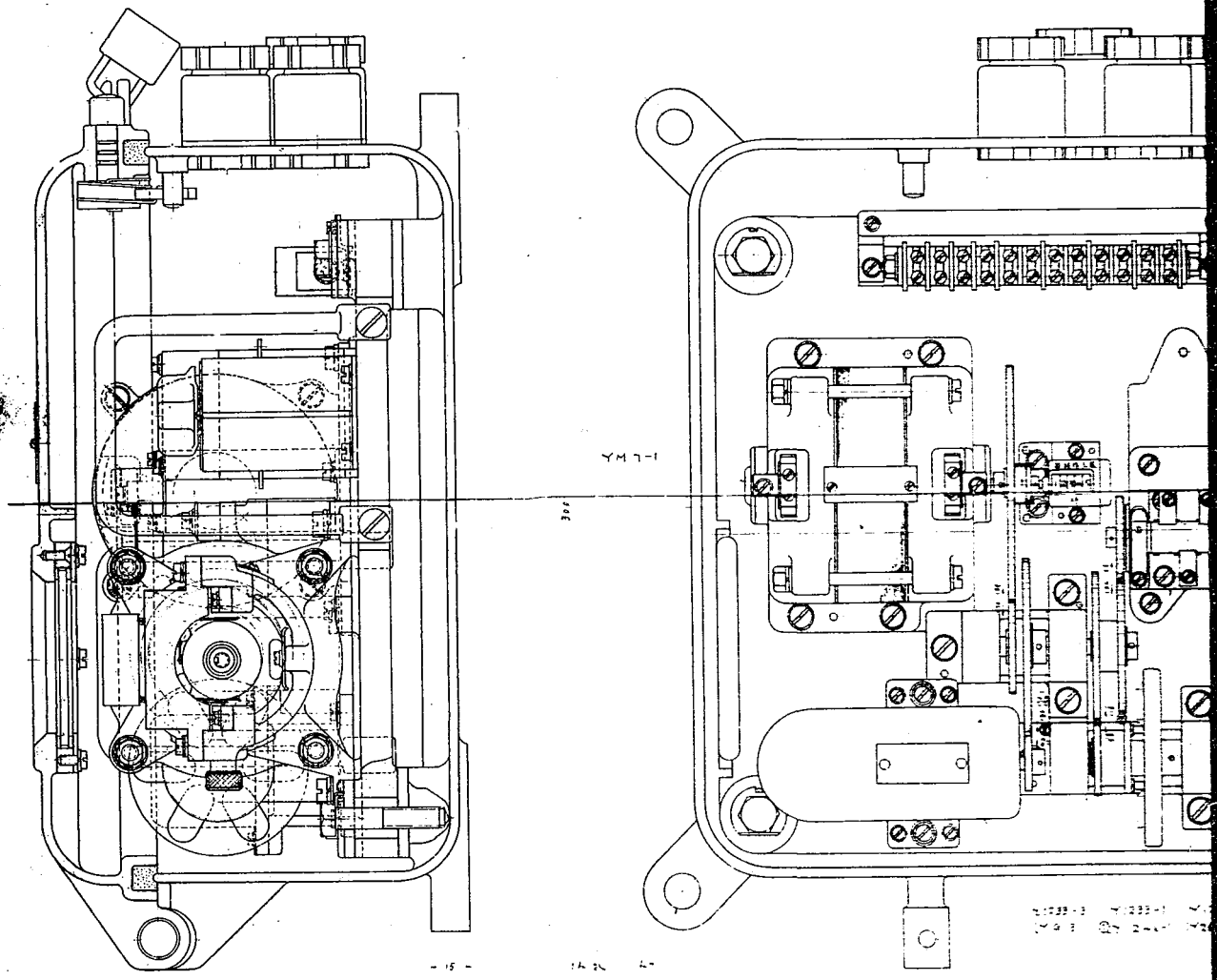

TYPE 92 LO
TRAN

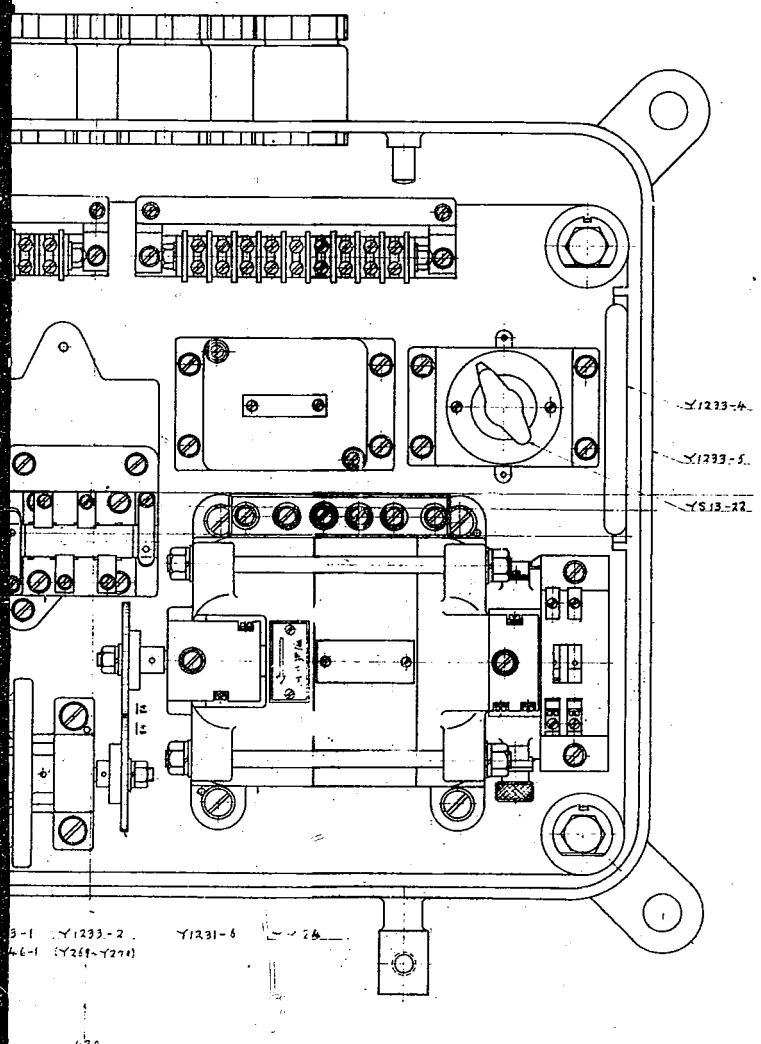

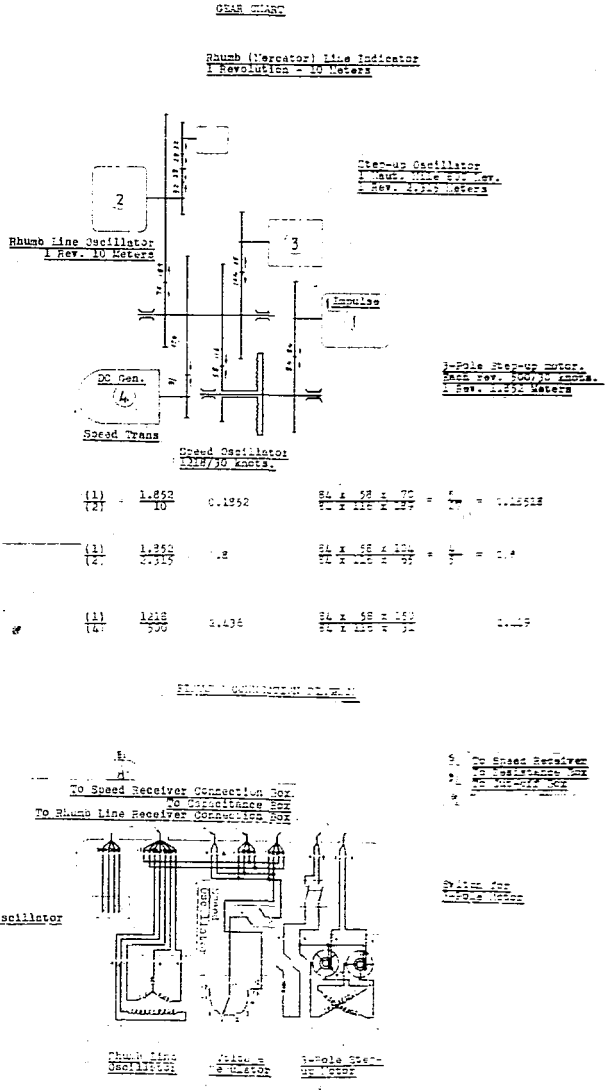

Figure 195
92 LOG - SPEED AND DISTANCE TRANSMITTER ASSEMBLY

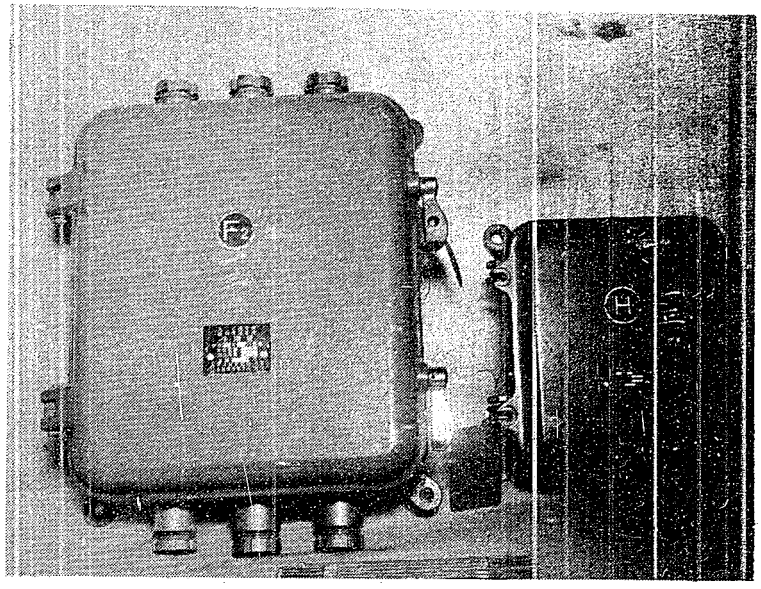

Figure 196
TYPE 92 LOG - CONDENSER AND JUNCTION BOXES (CLOSED)

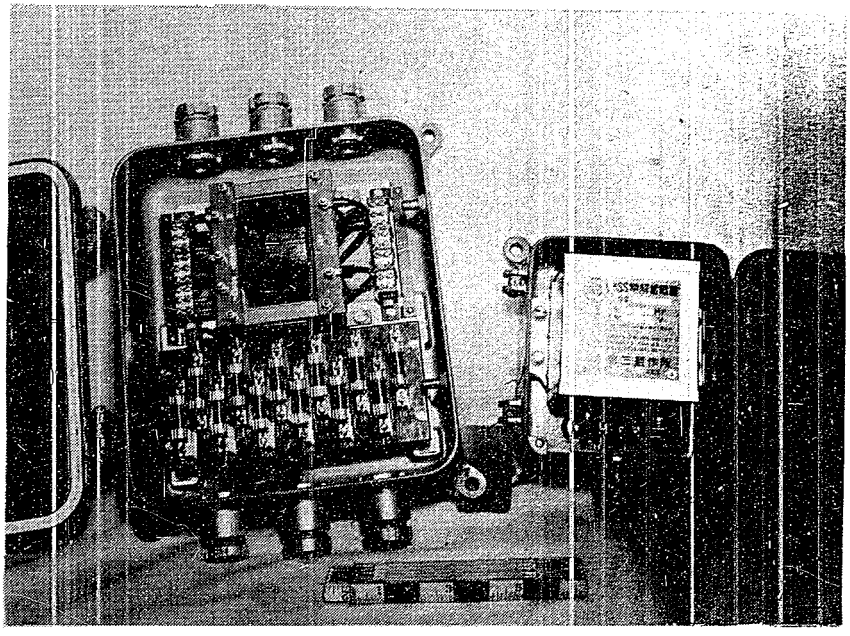

Figure 197
TYPE 92 LOG - CONDENSER AND JUNCTION BOXES (OPEN)

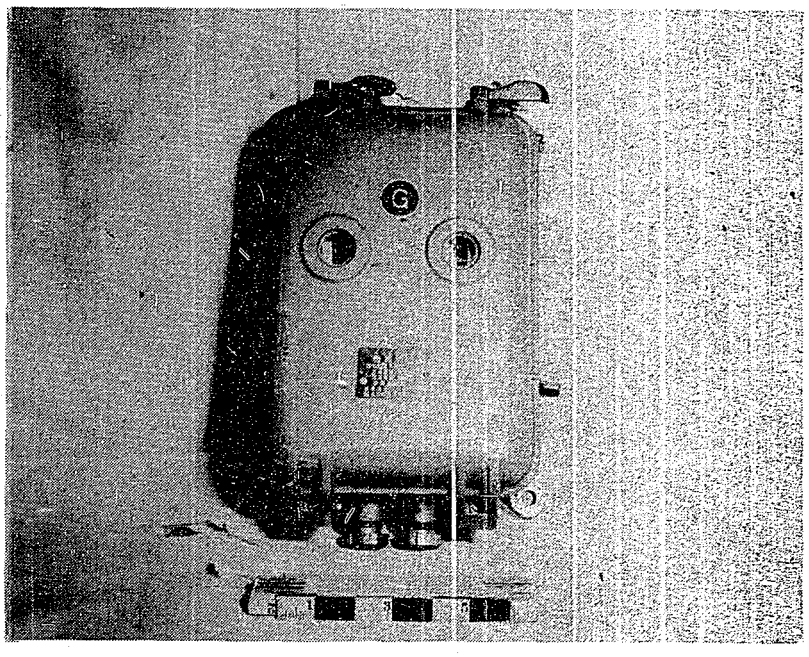

Figure 198
TYPE 92 LOG - POLARIZED
RELAY BOX (CLOSED)

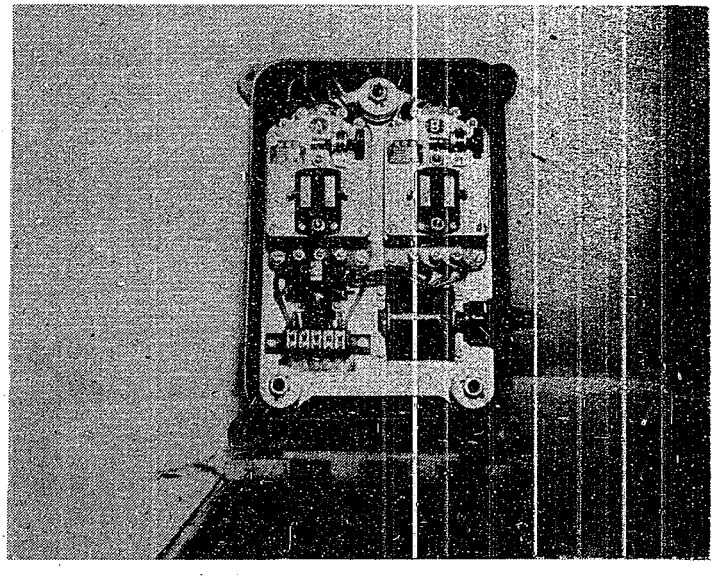

Figure 199
TYPE 92 LOG - POLARIZED
RELAY BOX (OPEN)

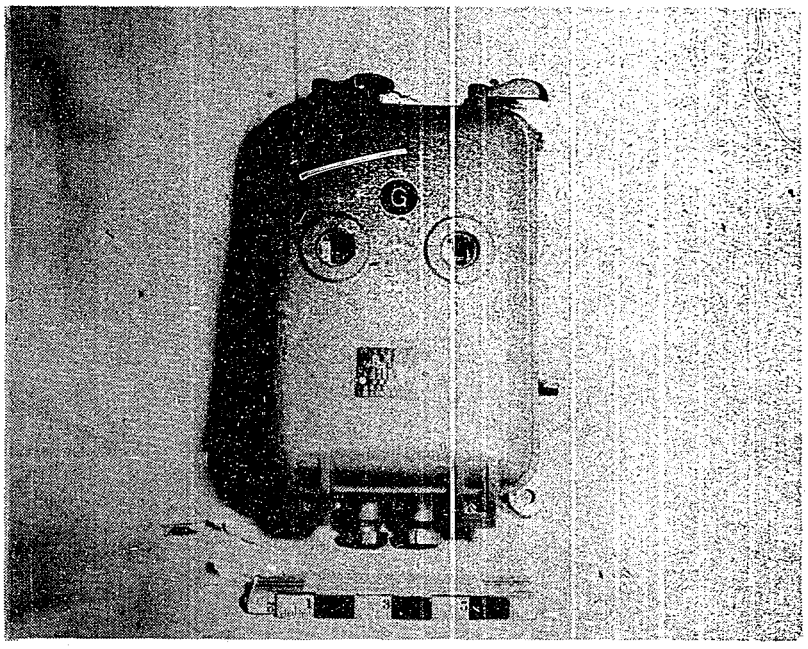

Figure 198
TYPE 92 LOG - POLARIZED
RELAY BOX (CLOSED)

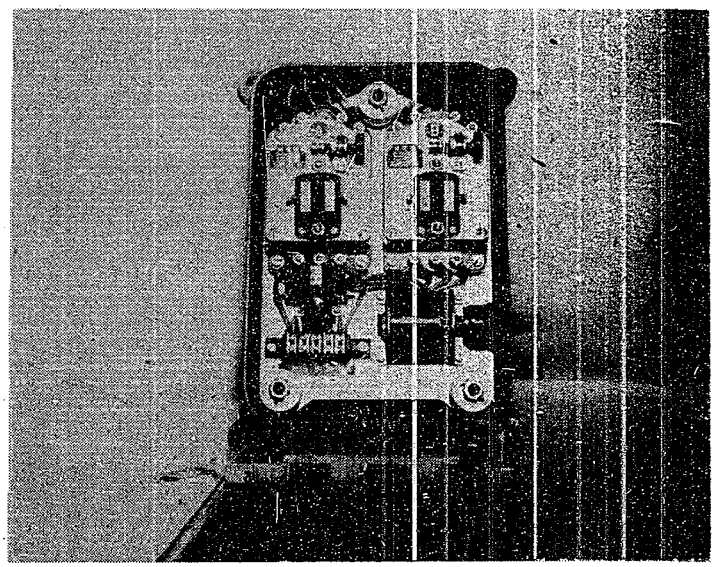

Figure 199
TYPE 92 LOG - POLARIZED
RELAY BOX (OPEN)

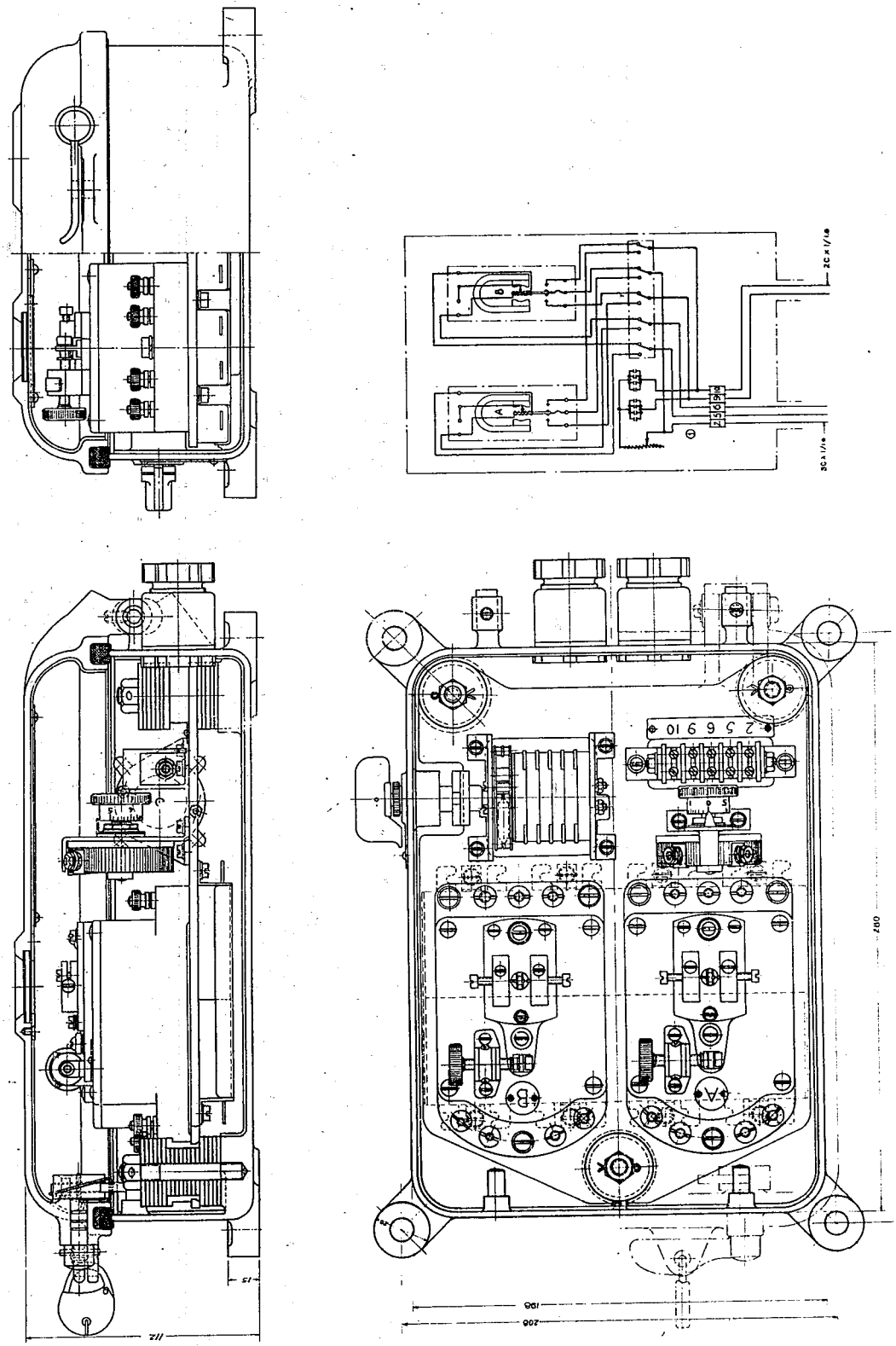

Figure 200
TYPE 92 LOG - POLARIZED
RELAY BOX - ASSEMBLY

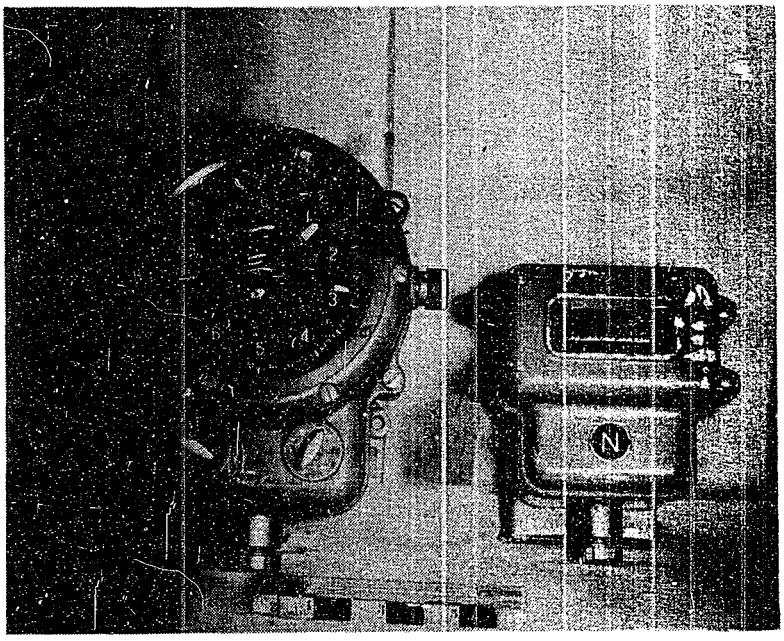

Figure 201
TYPE 92 LOG - SPEED AND DISTANCE INDICATORS (CLOSED)

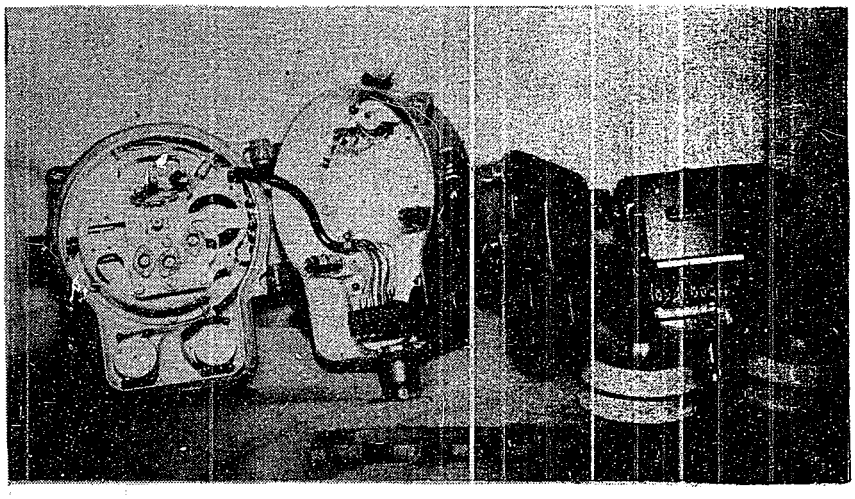

Figure 202
TYPE 92 LOG - SPEED AND DISTANCE INDICATORS (OPEN)

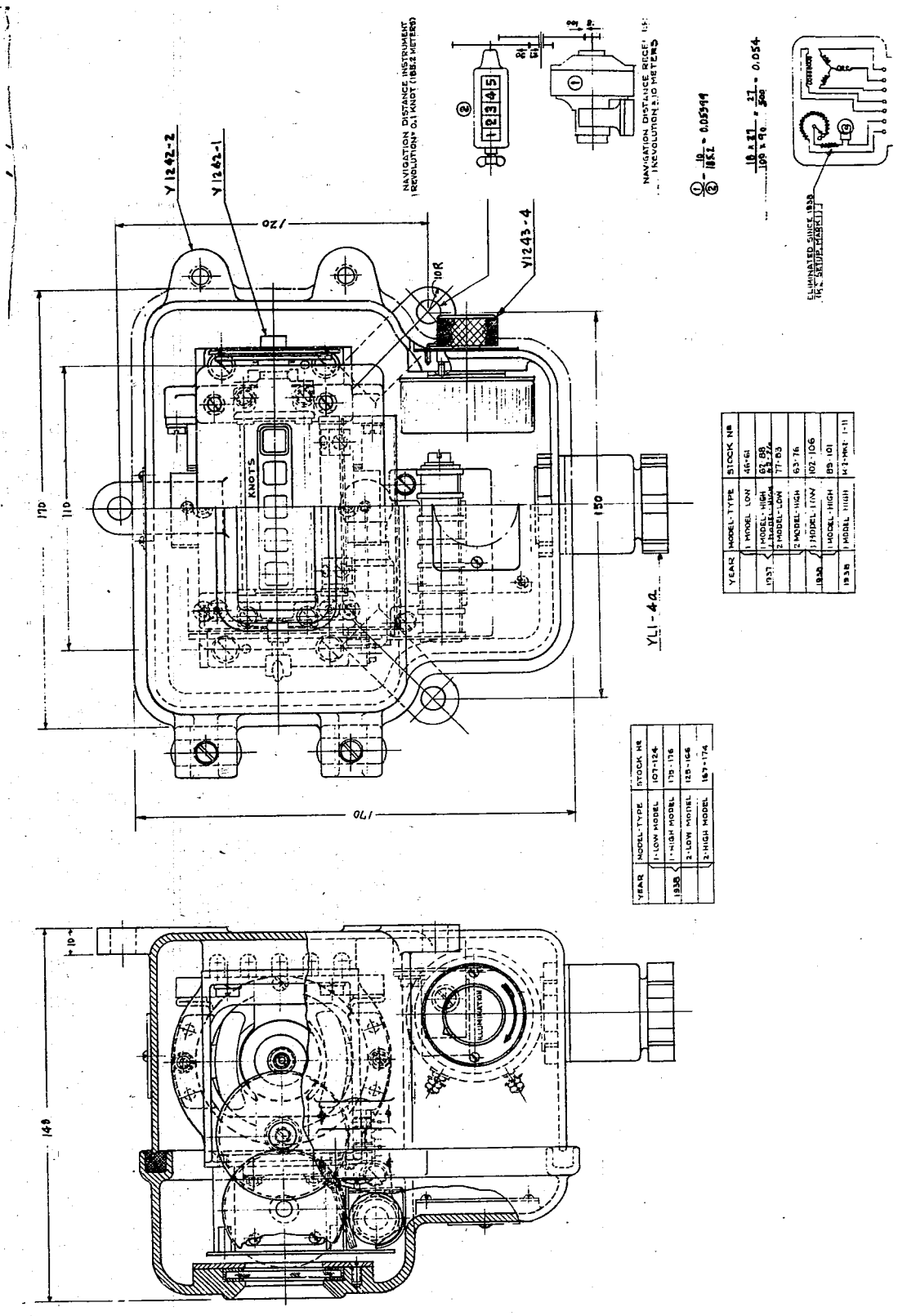

Figure 203
TYPE 92 LOG - DISTANCE INDICATOR ASSEMBLY

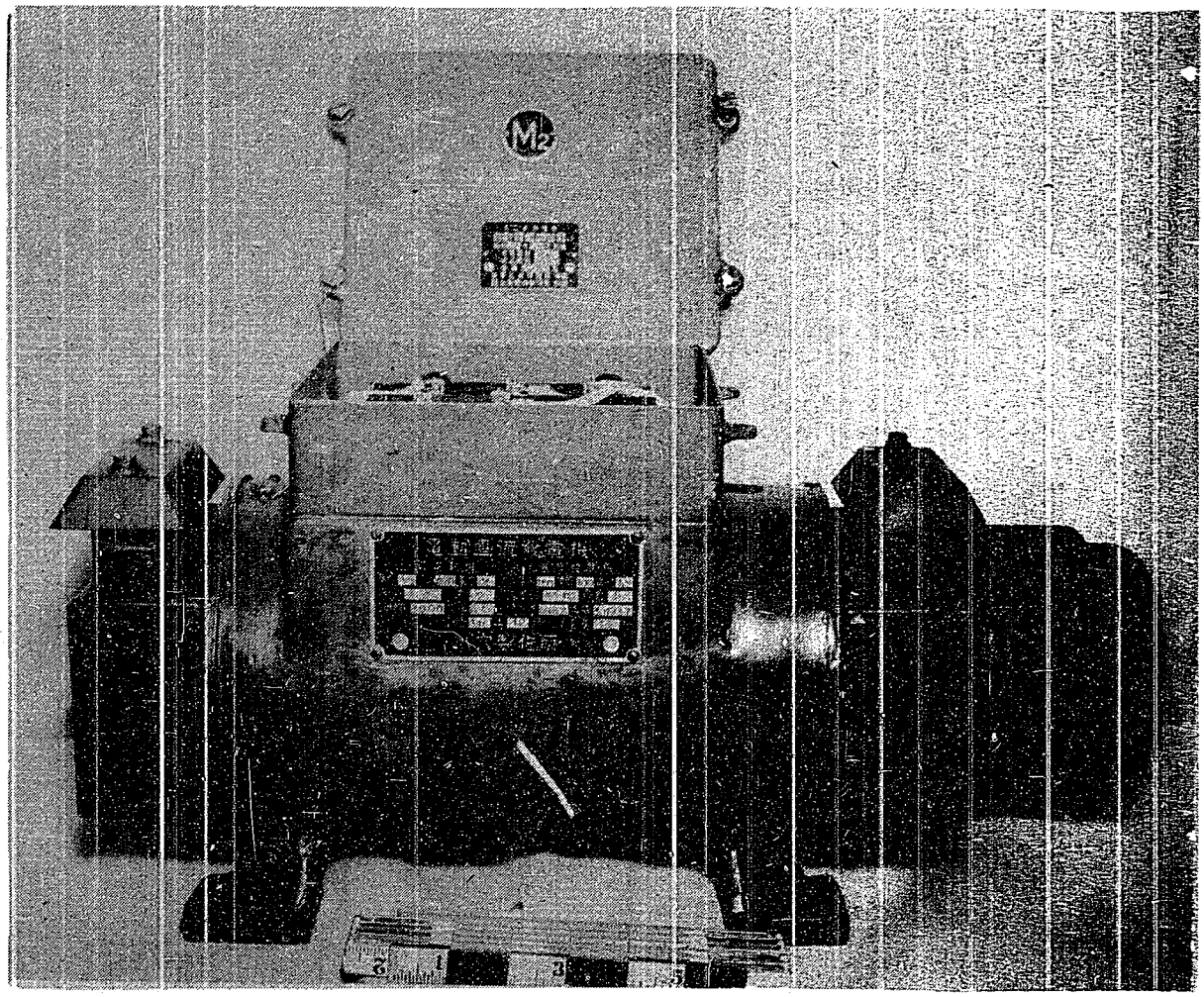

Figure 204
TYPE 92 LOG - MOTOR GENERATOR

in operation instantaneously from a zero setting or a predetermined setting and to facilitate resetting. A reset control is provided on the instrument.

(13) Speed indicator

This instrument is a voltmeter having a scale and construction as illustrated in Figures 207, 208 and 209.

(14) Cable (Amplifier to impeller)

This special cable with fittings is shown in Figures 186 and 187. It completes the electrical connection between the impeller tube and amplifier input.

(15) Impeller tube

This tube is comprised of a mounting flange, cylindrical section, streamlined sections, mounting head and impeller. Figure 210 shows the tube proper, less impeller and Figure 211 is a drawing of the impeller. The cylindrical section of the tube facilitates movement of the tube through the seacock assembly. The materials of the impeller assembly have been added to Figure 211. The copper-gold alloy 50/50 in the contacts and the sapphire bearings are of particular interest. The notes on Figure 211 cover the following major points:

(a) There shall be no oil used in the assembly of the impeller.

(b) Frictional torque (static) to be less than four gm-cm.

The rotor or the impeller unit proper (including the contact mechanism) runs in sea water. This unit requires considerable attention and service and has to be replaced as often as once a month.

(16) Seacock

The seacock acts as the support for the impeller tube and also provides, as the name implies, a valve for closing off the opening to permit withdrawing the tube for repair or replacement. It also permits withdrawing the tube in shallow or foul water to prevent damage.

Figure 213 is an assembly photograph of the Type 92 log showing all components except the impeller tube assembly with impeller.

7. Telegraph Systems

This section covers engine revolution indicators, electrical telegraphs and ships' telegraphs. These three items refer to equipment of the same general nature and there is so little worthy of record that a combined report is adequate. Sample equipment has been shipped to the Bureau of Ships, hence, the description of the instruments has been eliminated.

The telegraph systems used aboard Japanese naval vessels are similar in design and operation to those in use in ships of the U. S. Navy. (Figures 214, 215 and 216.) The system is selsyn motor operated and includes, basically, the same circuits as those used in U. S. ships: engine order telegraph, engine revolution telegraph, steering order telegraph, rudder angle indicator and a damage control telegraph.

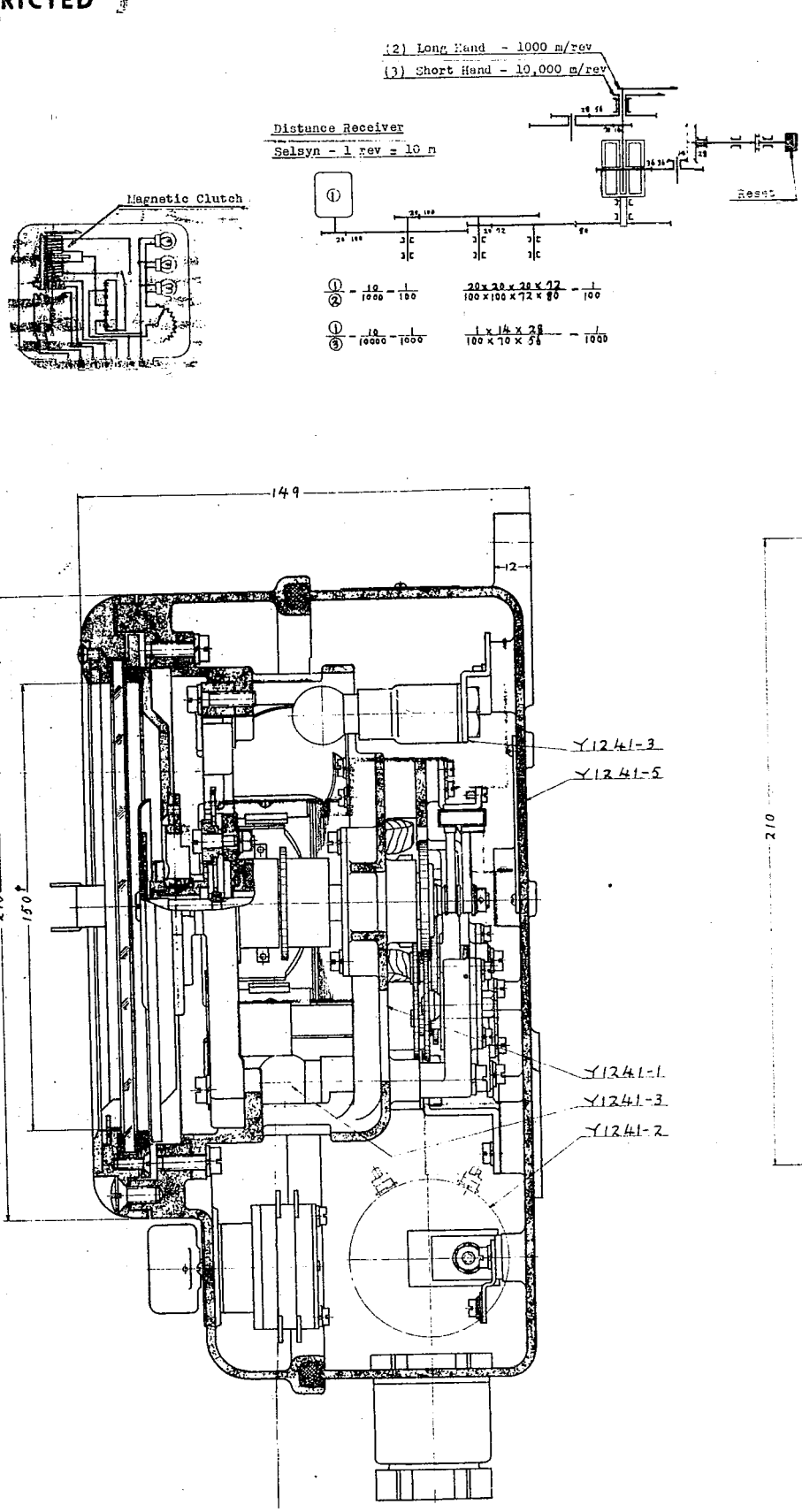

Figure 205
TYPE 92 LOG - DISTANCE INDICATOR - ASSEMBLY

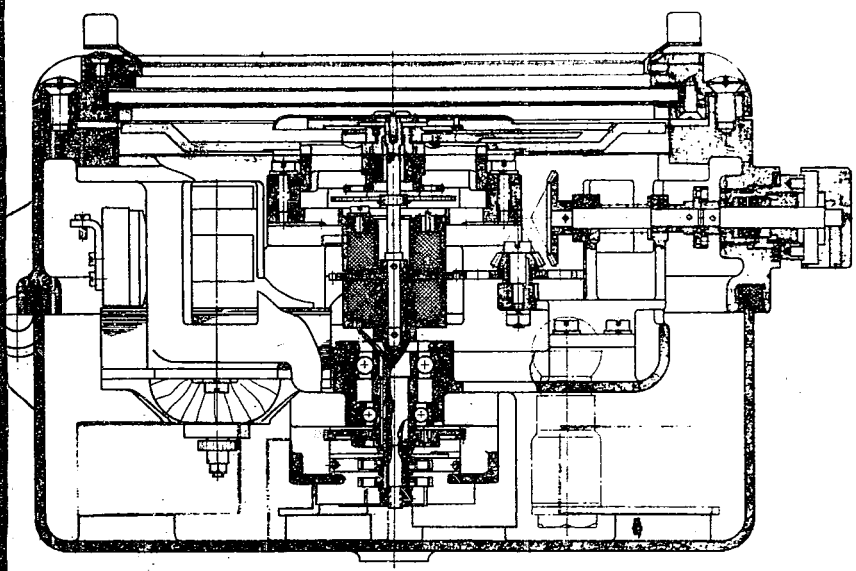

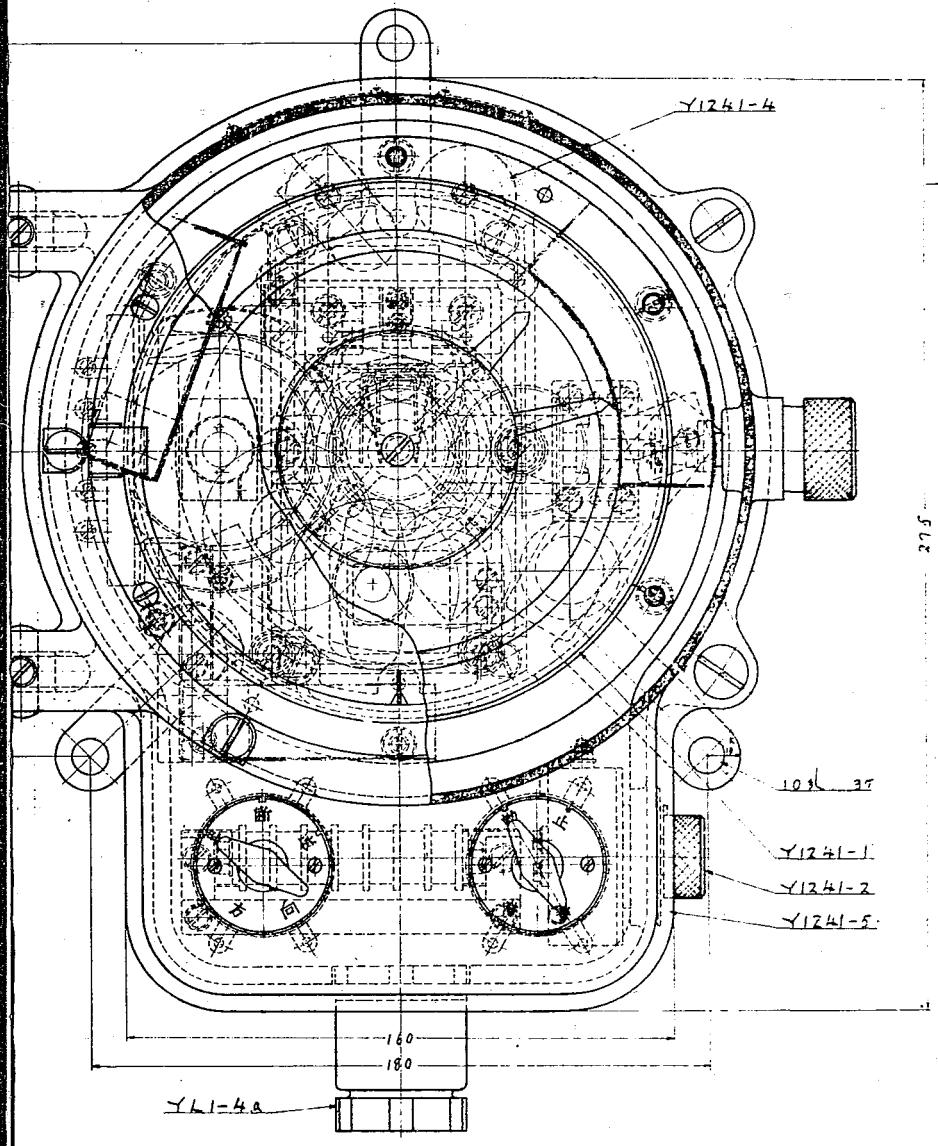

ATOR – ASSEMBLY

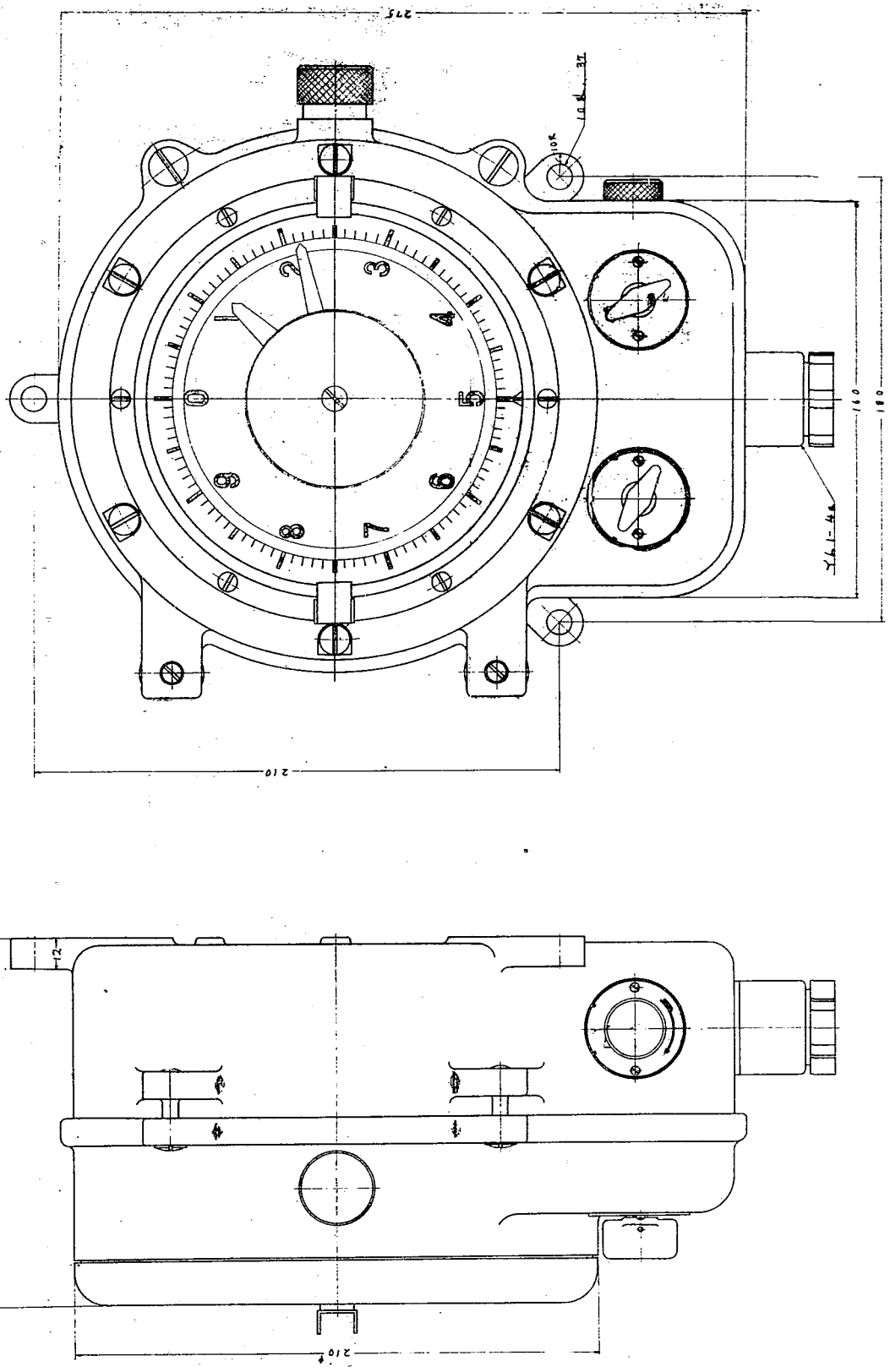

Figure 206
TYPE 92 LOG - DISTANCE INDICATOR - OUTLINE

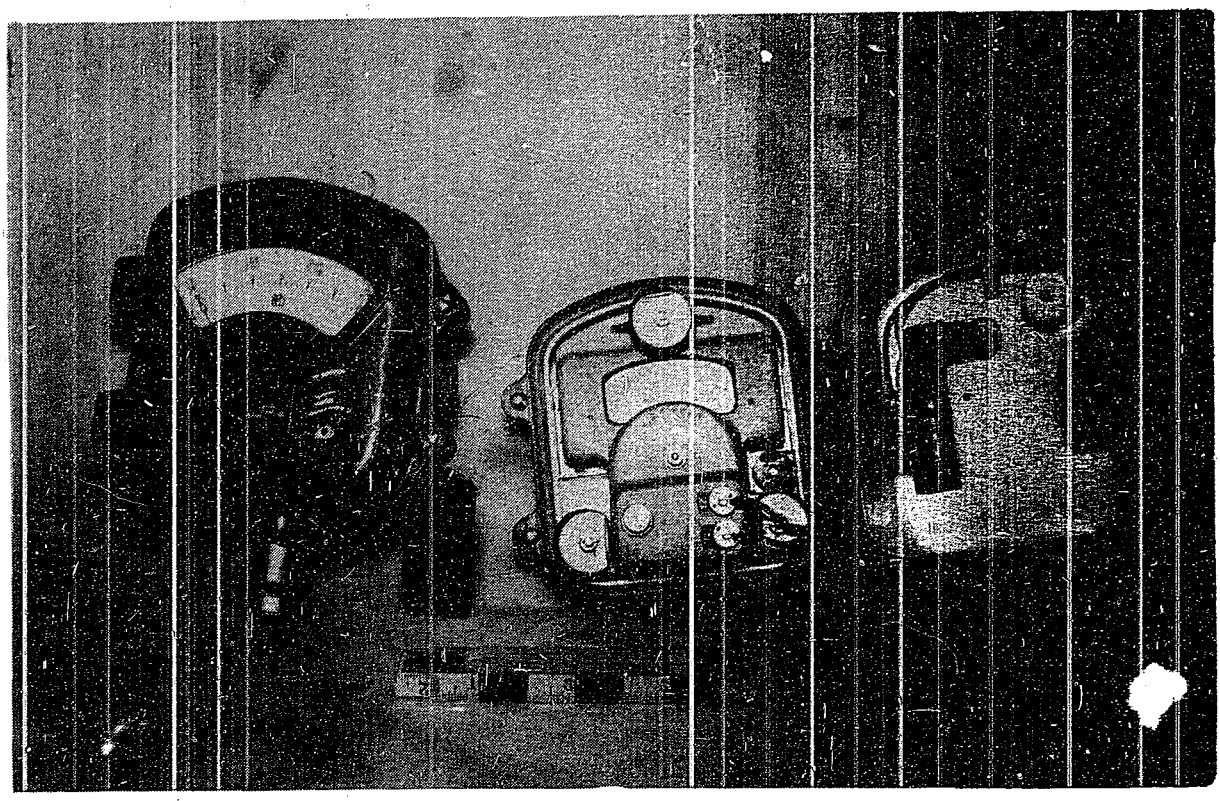

Figure 207
TYPE 92 LOG - SPEED INDICATOR

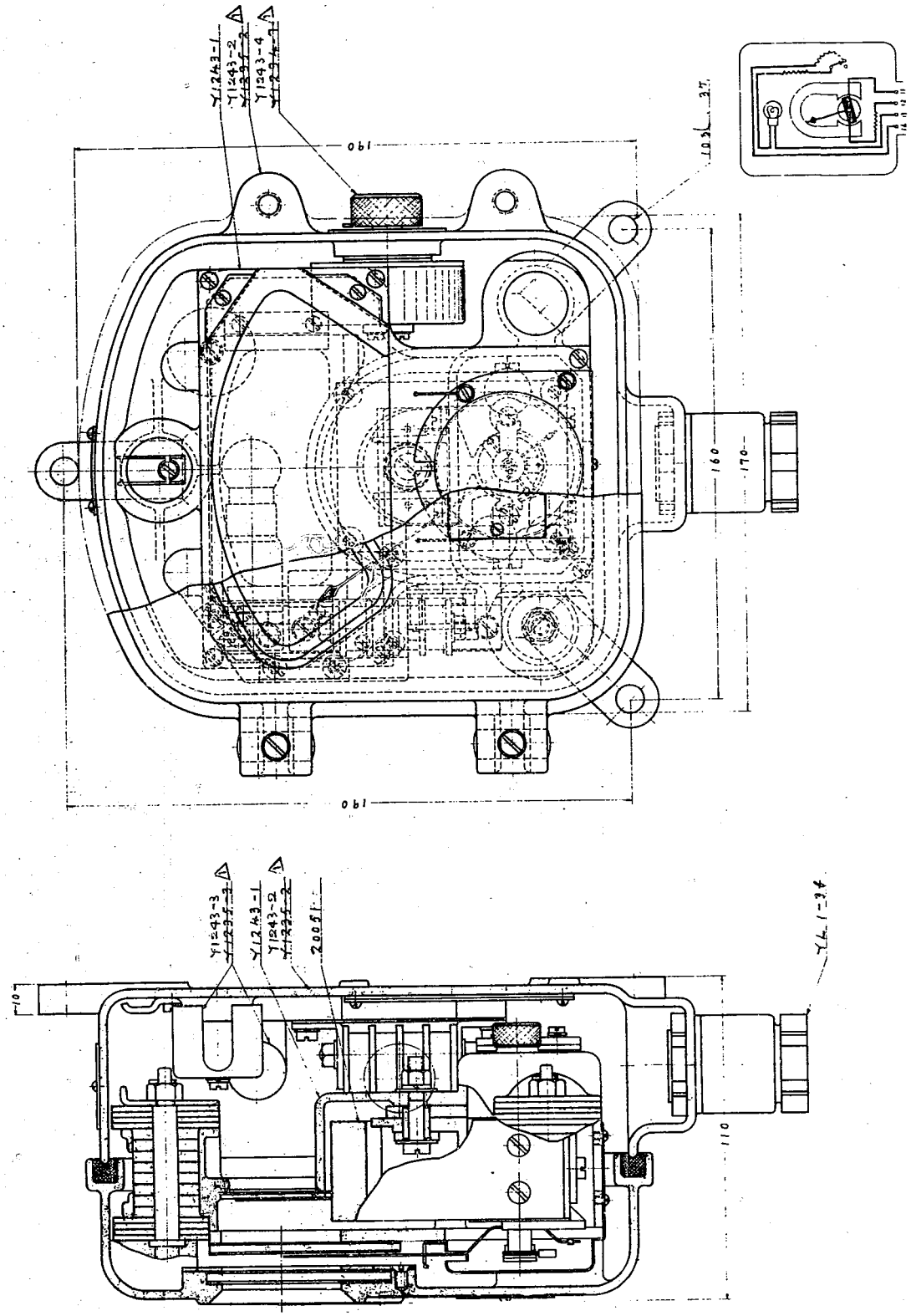

Figure 208
TYPE 92 LOG - SPEED INDICATOR - ASSEMBLY

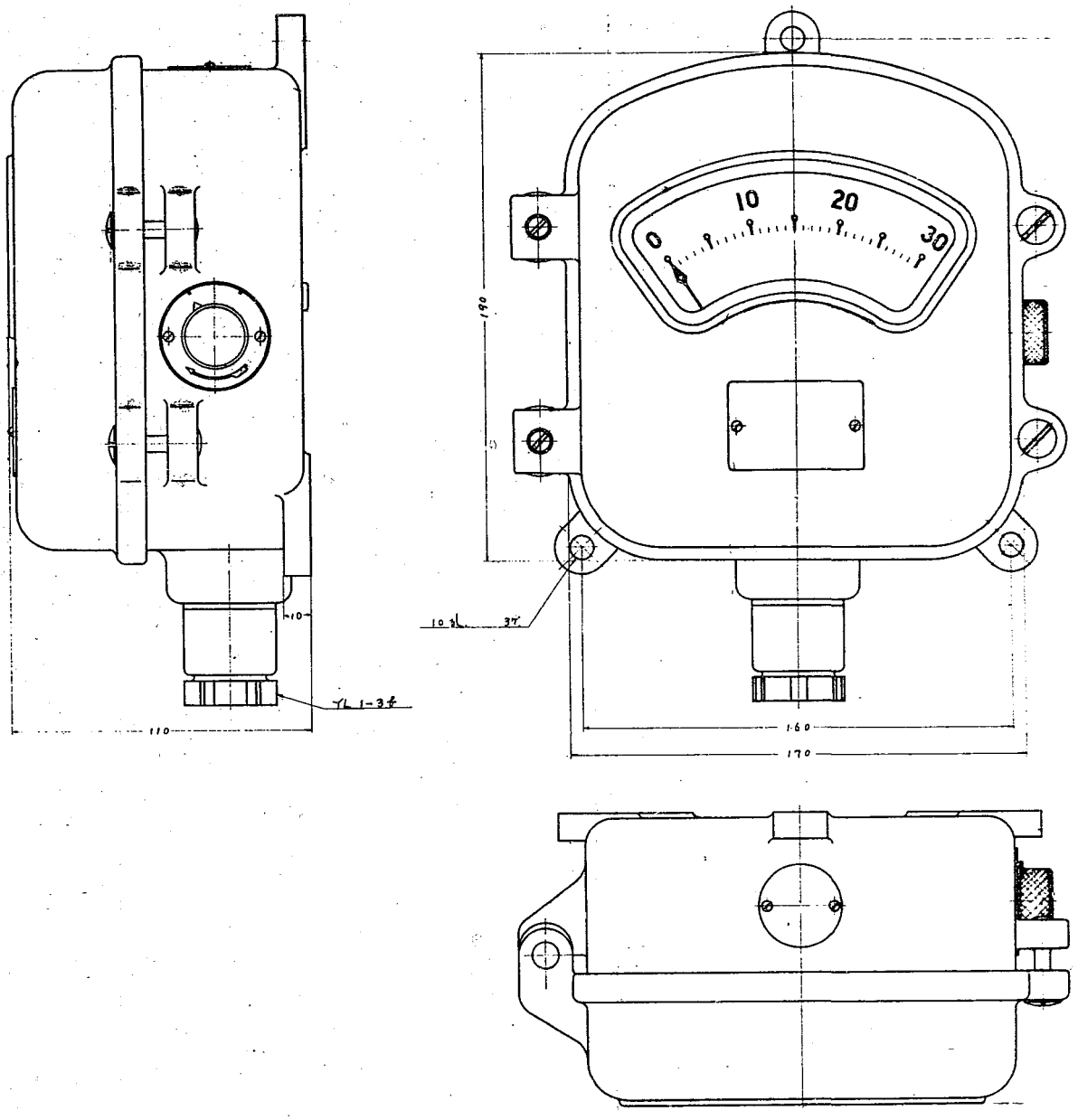

Figure 209
TYPE 92 LOG - SPEED INDICATOR - OUTLINE

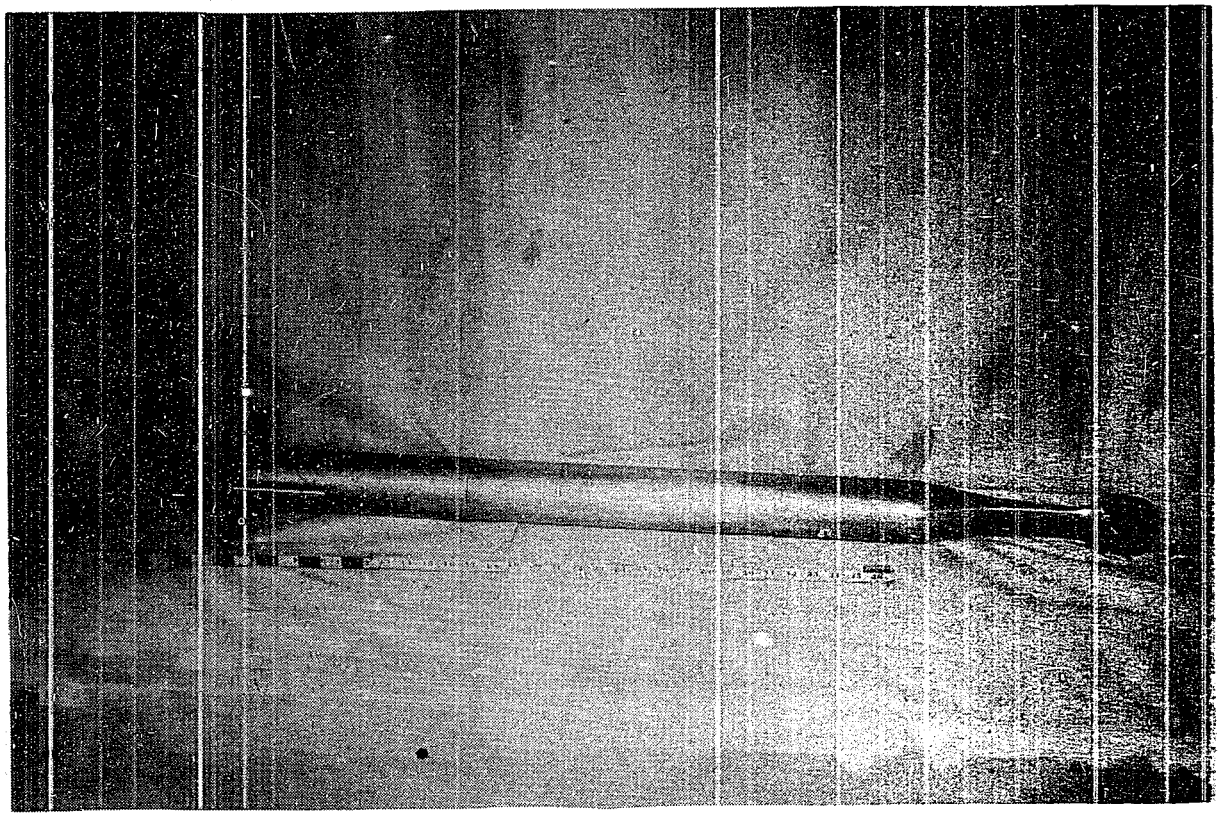

Figure 210
TYPE 92 LOG - IMPELLER TUBE

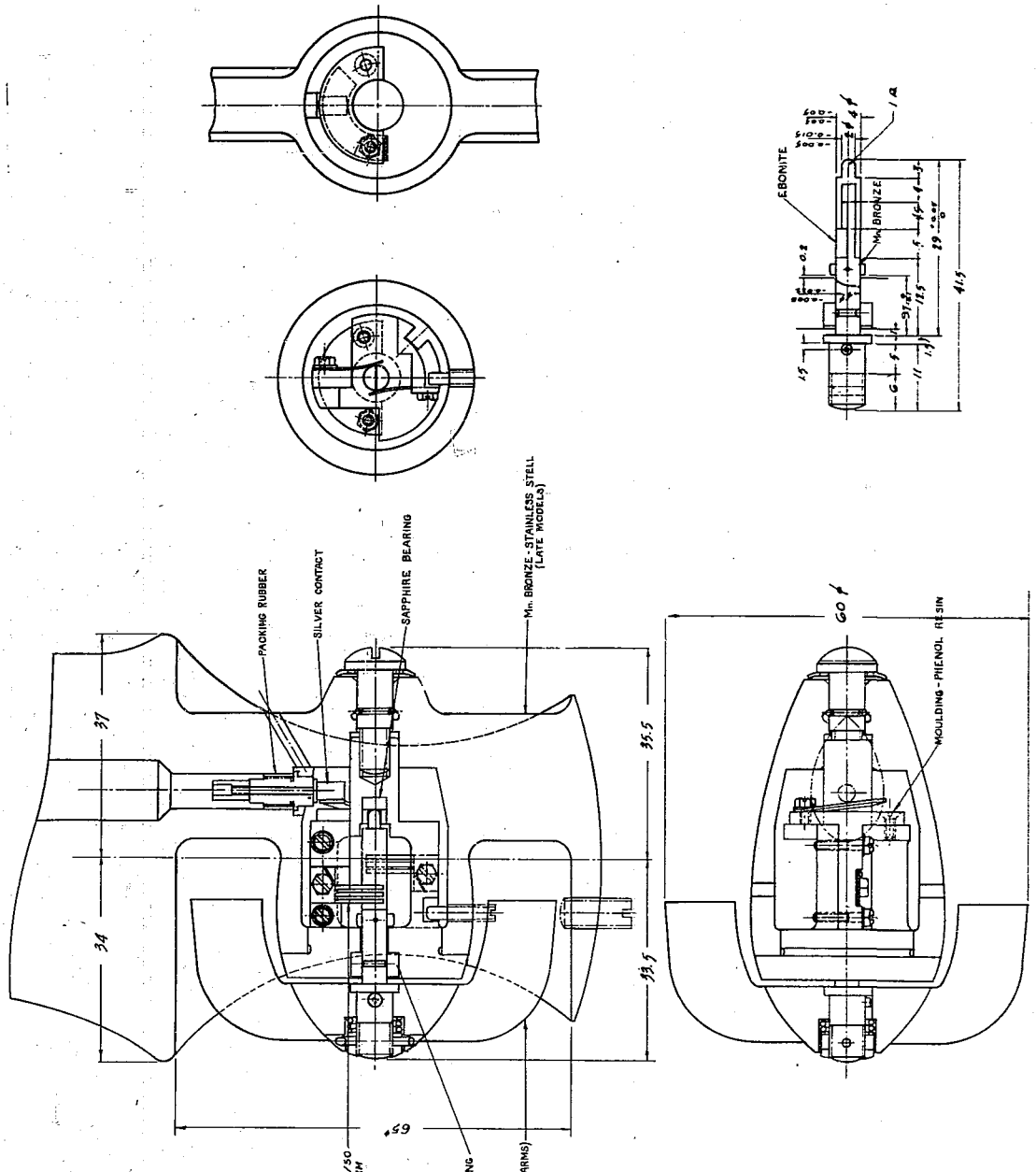

Figure 211
TYPE 92 LOG - IMPELLER TUBE - ASSEMBLY

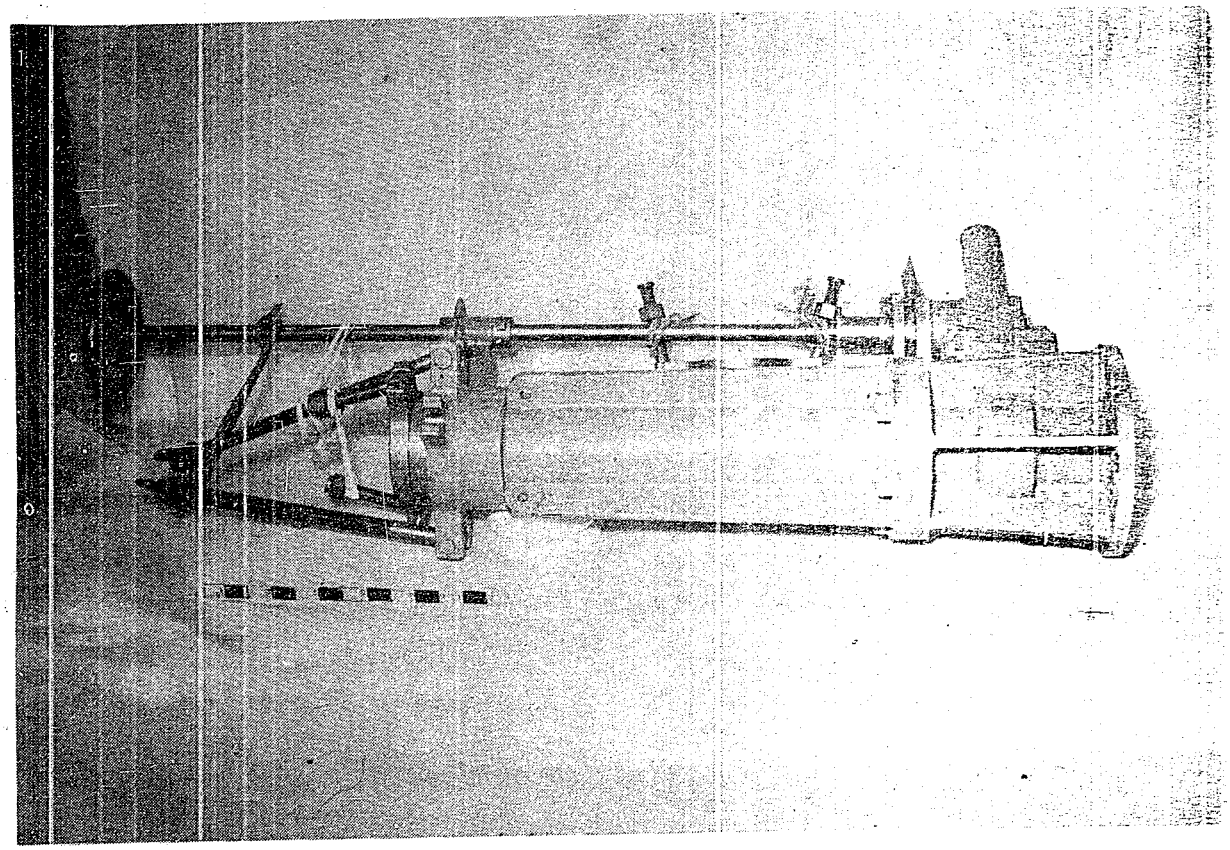

Figure 212
TYPE 92 LOG - SEACOCK

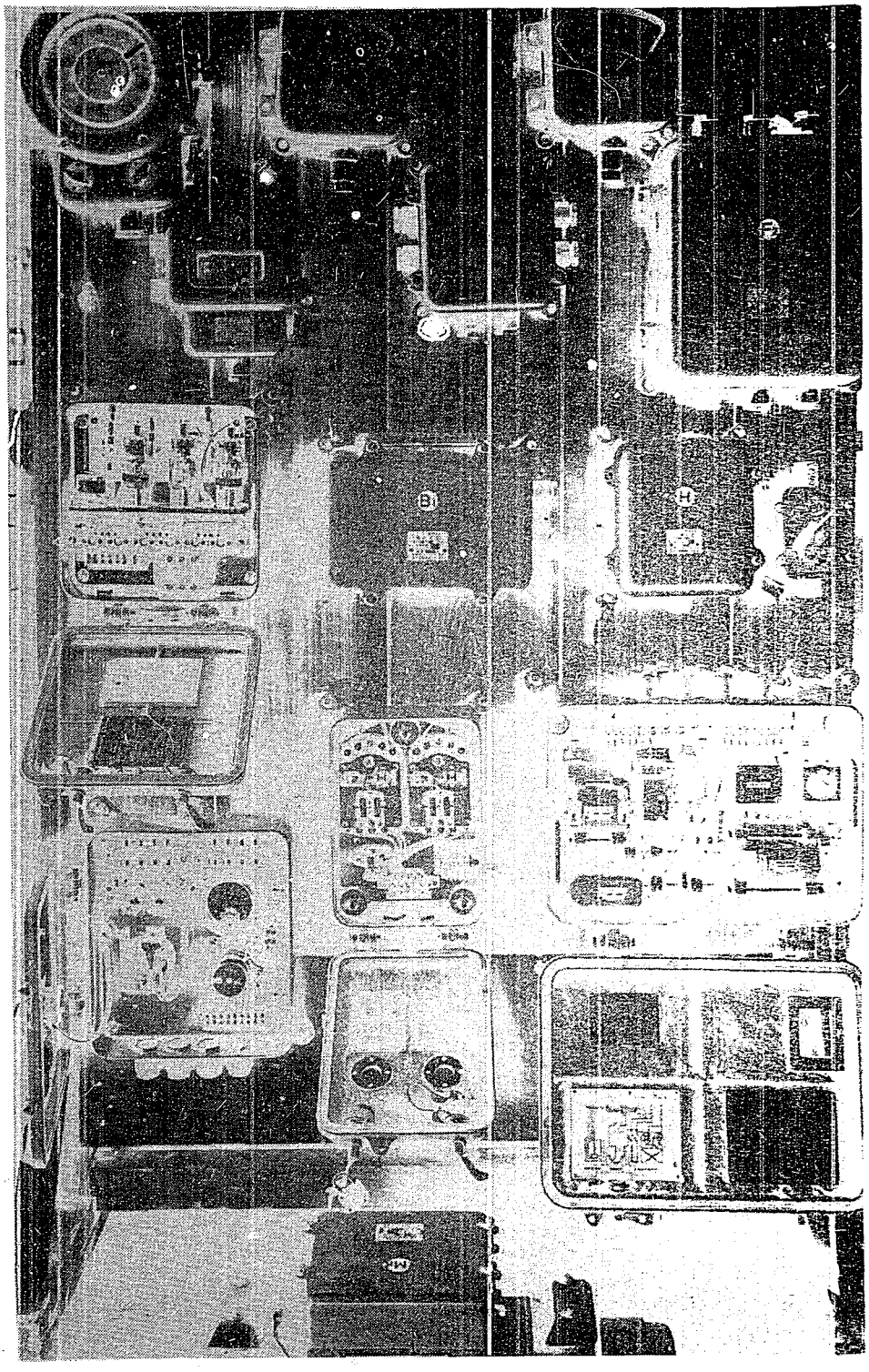

Figure 213
TYPE 92 LOG - ALL ITEMS

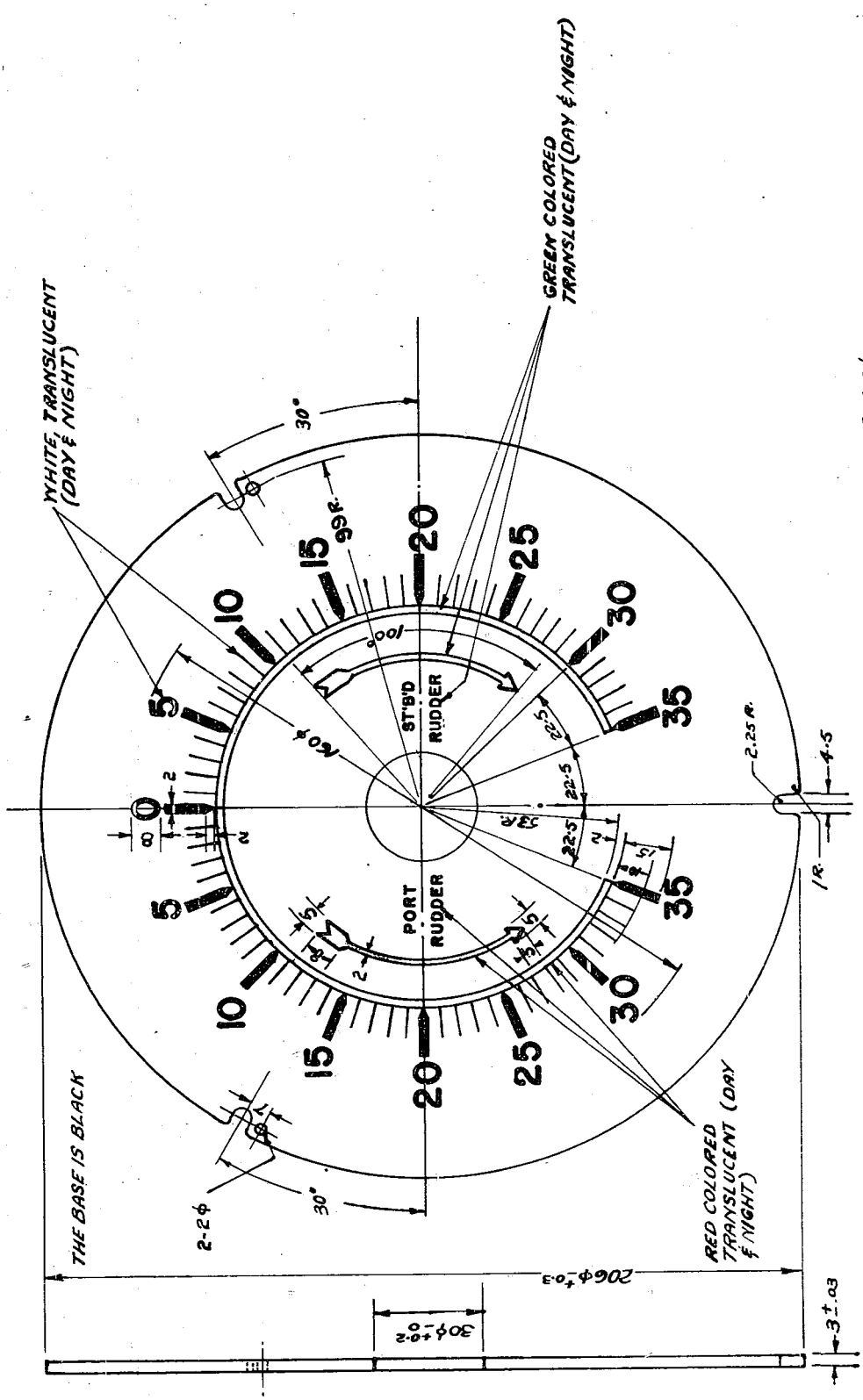

THE ANGLE OF EACH GRADUATION IS 4.5°
WIDTH OF EACH GRADUATION IS 0.5 MM.

Figure 214
RUDDER ANGLE INDICATOR - RECEIVER DIAL

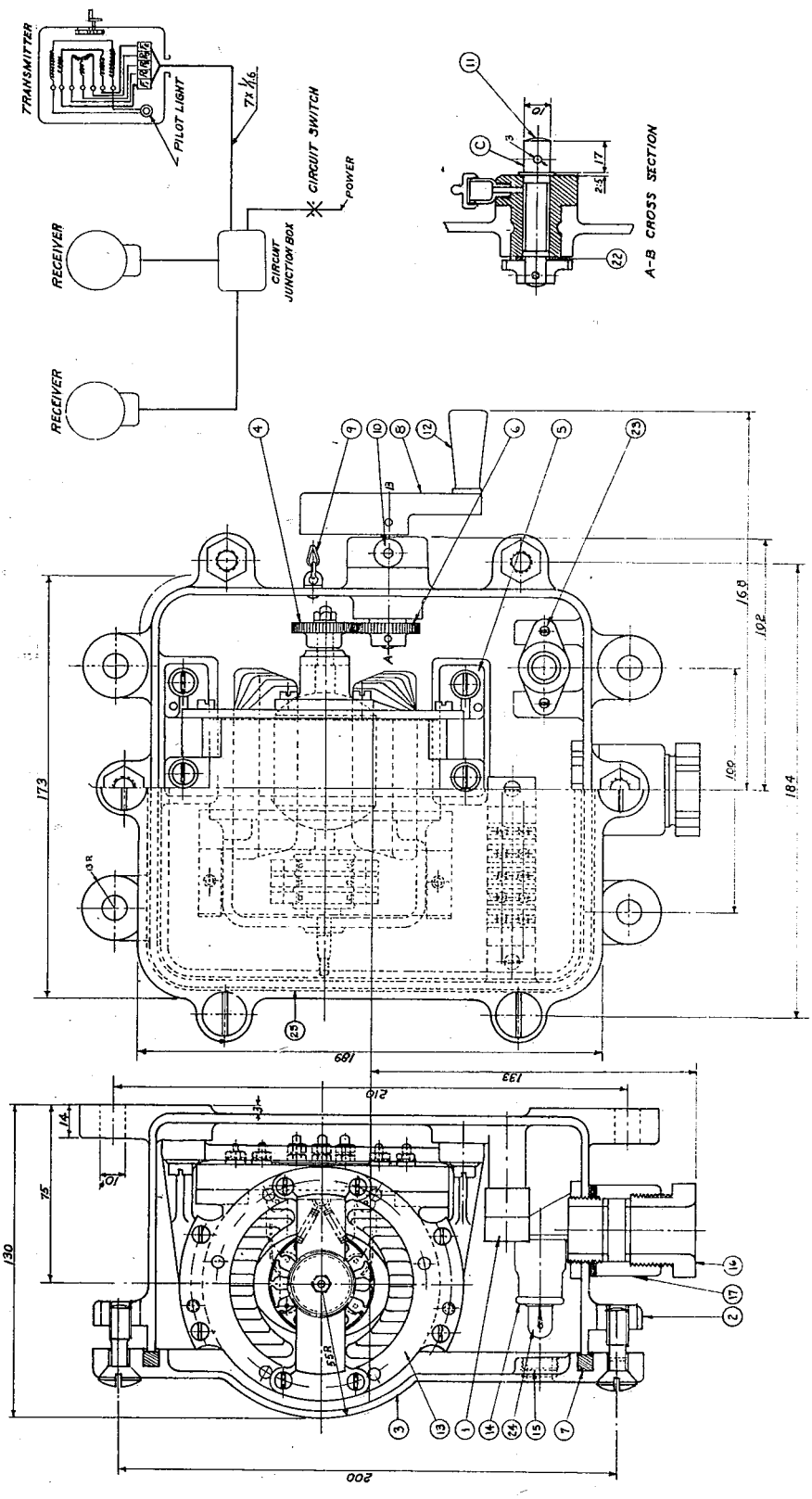

Figure 215
SELSYN MOTOR TRANSMITTER - ASSEMBLY

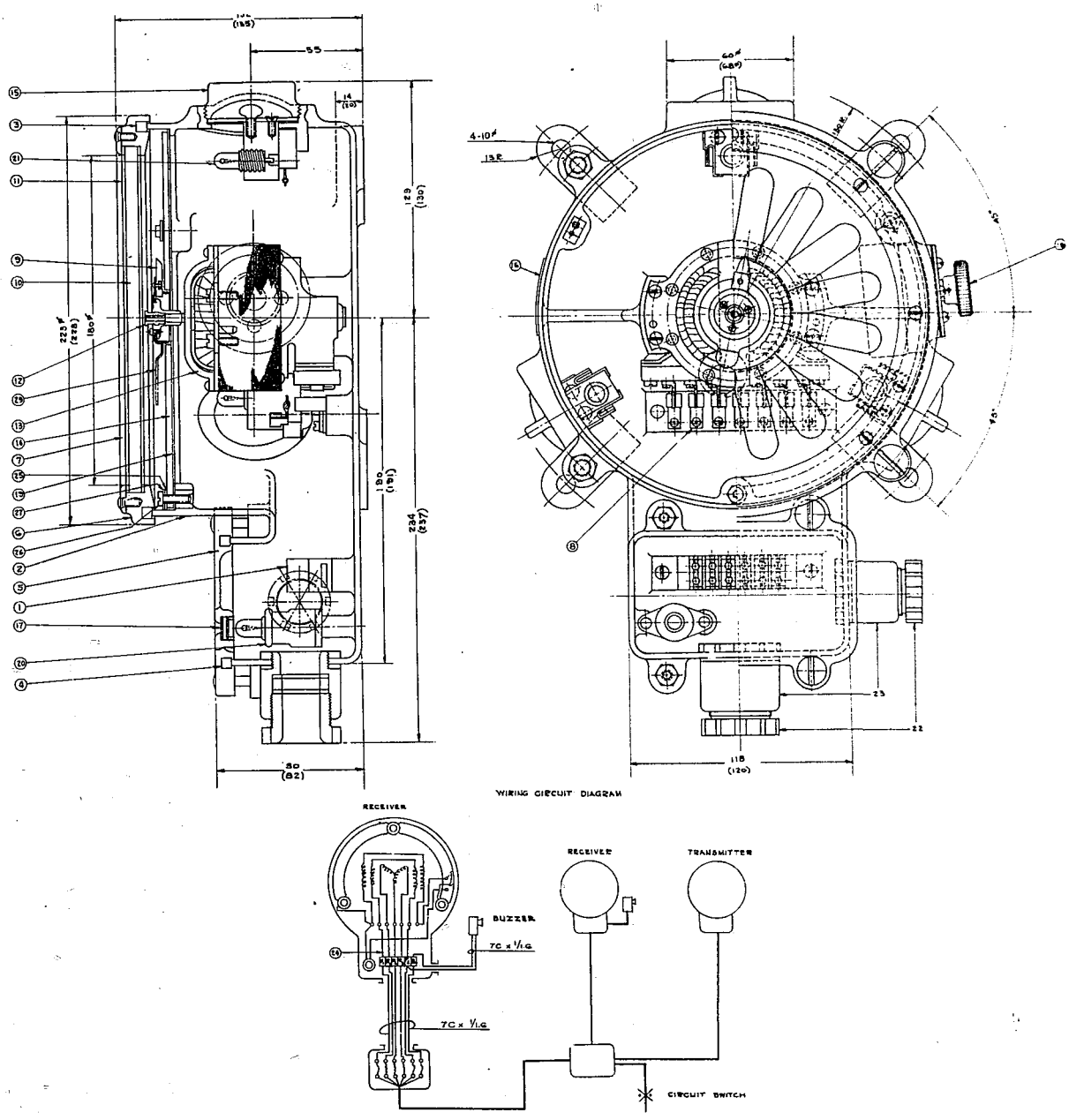

Figure 216
SELSYN MOTOR RECEIVER - ASSEMBLY

The selsyn motors used are of German design manufactured in Japan. Some of the motors are equipped with a series of male plugs for plug-in connection. One feature that is worthy of note is the practice of incorporating extra winding in the field of the motors, for use as a lighting transformer to supply the "Power On" signal and dial illuminating lamps, as shown schematically in Figure 217. Each transmitter is capable of driving up to sixteen receivers.

In general, the accuracy of these systems is not as good as those of the U. S. Navy. Three classes of circuits are used depending on the accuracy of reading required. For this purpose the selsyns are graded for accuracy at one degree, two degrees, three degrees. In fire control circuits an accuracy of one degree is used, for rudder angle indicators about two degrees and for engine order telegraphs, about three degrees. The use of open construction motor housings is considered poor design and is not considered comparable with the dust tight design employed by the U. S. Navy.

Mechanical telegraph systems are also used for engine order and rudder angle indication. The mechanical engine order transmitter is coupled by shafts, gears and universal joints to the receiver in the engine room. Several indicators may also be driven from this system. The transmitter is a pedestal mounted type with a hand wheel crank for operation and is extremely sluggish and difficult to operate. The mechanical rudder angle indicator operates from a gear quadrant on the rudder post and is coupled by shaft and gear to indicators in the steering engine room and emergency steering room.

Sample electrical telegraph units have been collected and shipped to the Bureau of Ships as listed below:

NavTechJap Equipment No.	Item
JE22-2055A	Engine Order Telegraph-Transmitter
JE22-2055B	Engine Order Telegraph-Receiver
JE22-2058	Rudder Angle Indicator-Receiver
JE22-2059	Damage Control Telegraph-Receiver
JE22-2060A	Steering Order Telegraph-Transmitter
JE22-2060B	Steering Order Telegraph-Receiver

8. Propeller Shaft RPM System

Two types of shaft revolution indicators are used by the Japanese Navy: a voltmeter type electrical RPM system and a mechanical accumulative register similar to a Veeder counter. There is nothing new or worthy of special note in either of these systems, the general scheme of operation being similar to equipment used in small craft and submarines of the U. S. Navy.

The electrical RPM system (Figure 218) comprises a transmitter, and indicator switch box and the indicators.

The transmitter, (Figure 219) is magnet D.C. generator which is belt driven from the propeller shaft. The generator develops a terminal voltage of 30 volts at optimum speed and has the capacity for driving a maximum of twelve indicators.

The indicator switch box (Figure 220) contains double throw switches with compensation resistors for four indicators. A maximum of three switch boxes may be operated from one transmitter and compensating load resistors are provided for unused switch boxes.

The indicators (Figures 221, 222, and 223) are voltmeters with the dials graduated in RPM. The meter movements are arranged for reverse current

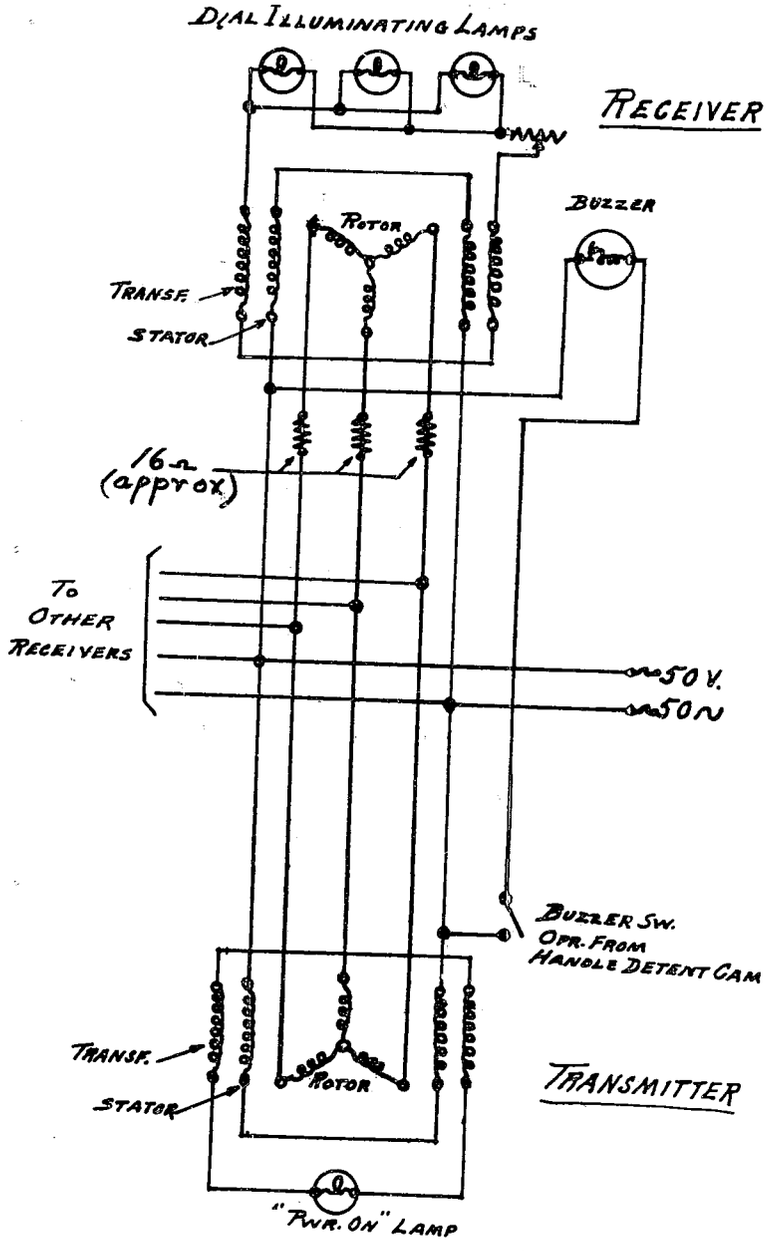

Figure 217
SCHEMATIC TYPICAL SELSYN TELEGRAPH SYSTEM

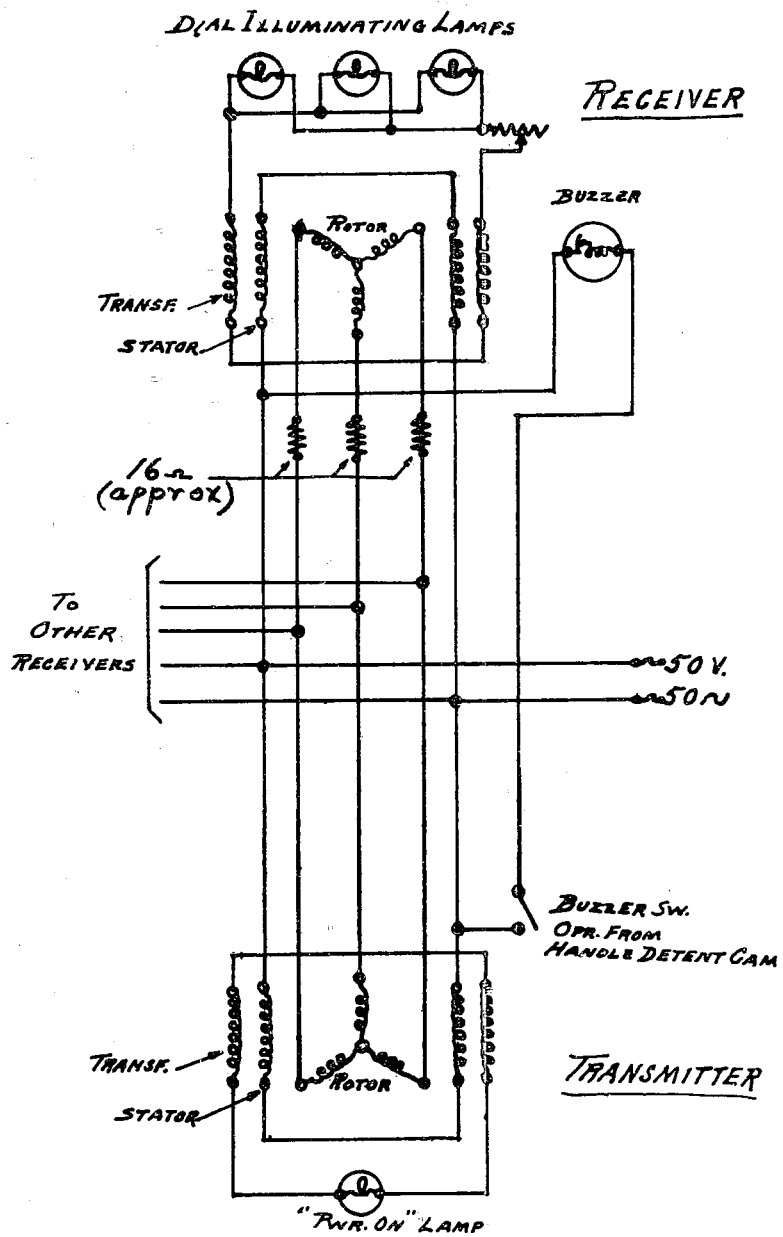

Figure 217
SCHEMATIC TYPICAL SELSYN TELEGRAPH SYSTEM

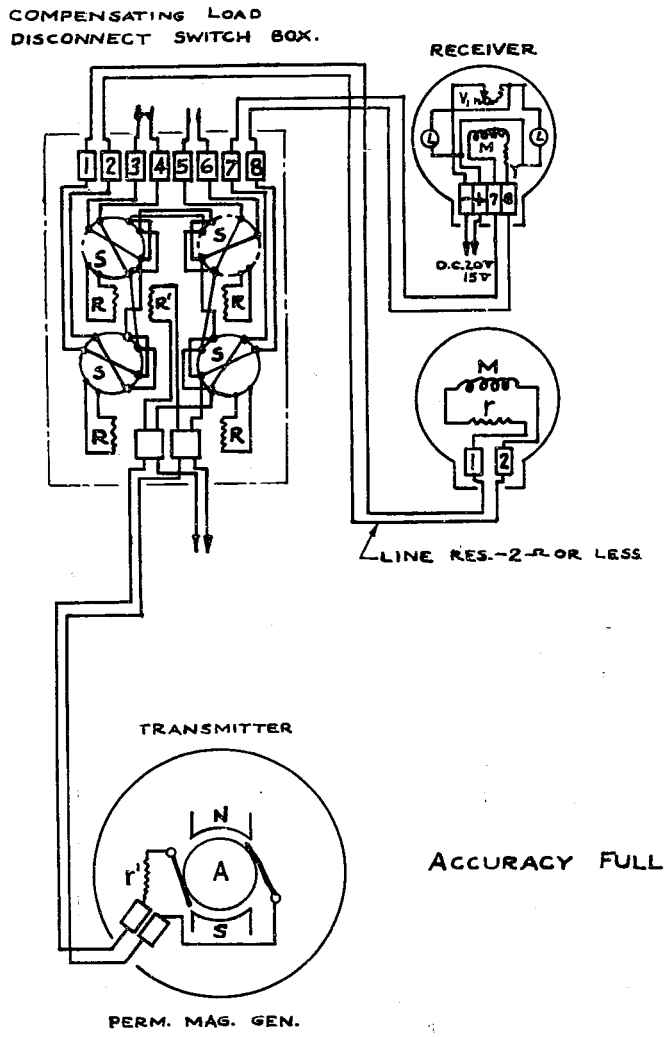

R APPROX. 2000 Ω
R' LOAD RES. 250 Ω
r REC. SERIES RES. 1460 Ω
r' TRANS. SERIES RES.
V. LAMP REG. RES.

TRANS. TERM. VOLT. 30 VOLT.
LOAD CURRENT 180 M.A.
REC. {30 VOLT. 15 M.A.

NO. OF COMP. SW.	LOAD RESISTANCE RES.	CURRENT
1	2000 Ω	15 M.A.
2	1000	30
3	666.7	45
4	500	60
5	400	75
6	333.3	90

ACCURACY FULL SCALE 1%

Figure 218
PROPELLER SHAFT RPM SYSTEM - CIRCUIT DIAGRAM

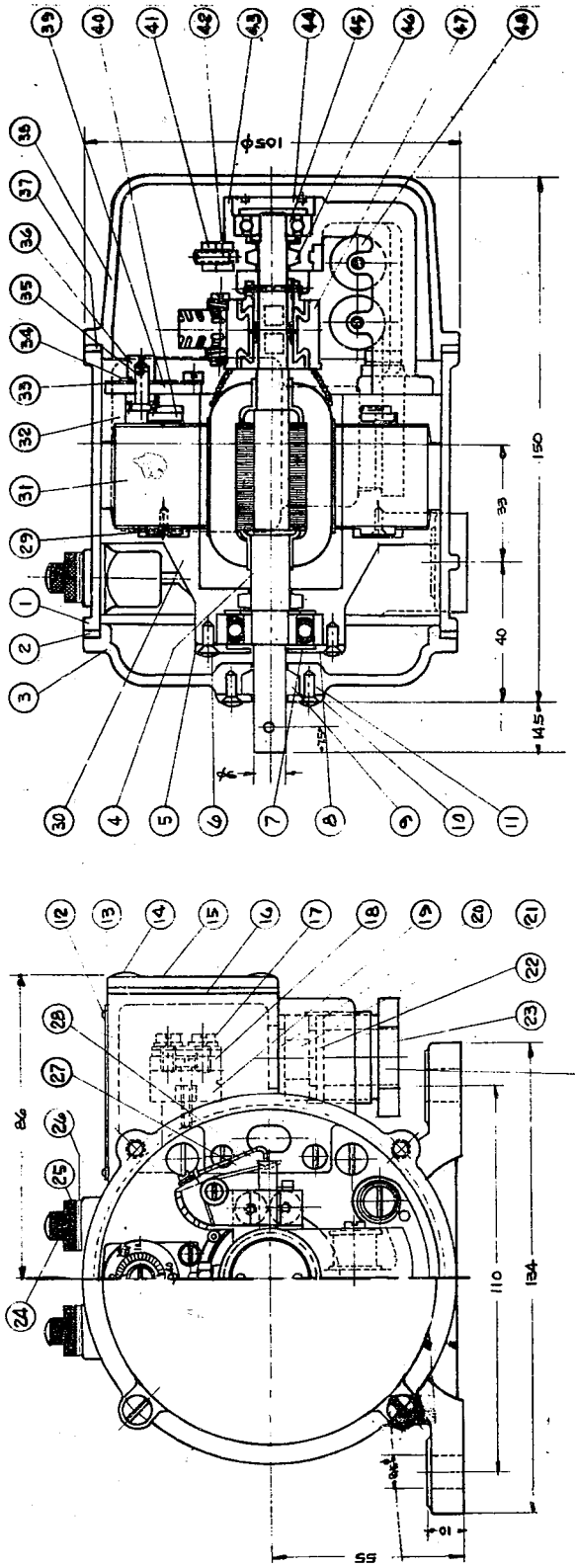

No.	DESCRIPTION	MATERIAL	QUAN.	NOTES	No.	DESCRIPTION	MATERIAL	QUAN.	NOTES	No.	DESCRIPTION	MATERIAL	QUAN.	NOTES
1	HOUSING	CAST IRON	1		14	MOUNTING SCR.	SOFT STEEL	4		27	SPRING	PIANO WIRE	2	
2	PACKING	LINEN	1		15	COVER	SOFT STEEL	1		28	BRUSH	METALLIC GRAPHITE	4	
3	COVER	CAST IRON	1		16	GASKET	LINEN	1		29	LAMINATED MAG. PLATES	MAGNETIC STEEL	2	
4	SHAFT	HARD STEEL	1		17	TERMINAL SCR.	BRASS	4		30	BEARING	BRONZE	2	
5	BEARING	BRONZE	1		18	TERMINAL SCR.	BRASS	2		31	MAGNET	MK MAGNET STEEL	4	
6	SCREW	SOFT STEEL	4		19	TERMINAL PLATE	BAKELITE	1		32	PRESS PLATE	BRONZE	1	
7	WASHER	SOFT STEEL	4		20	FITTING	SOFT STEEL	2		33	SCALE	ALUMINUM	1	
8	BALL BEARING				21	GASKET	RUBBER	1		34	INDICATOR NEEDLE	ALUMINUM	1	
9	PACKING	LEATHER	1		22	BOND BUCKLER	BAKELITE	1		35	GEAR SHAFT	SOFT STEEL	1	
10	WASHER	SOFT STEEL	1		23	WATER-PROOF RUN	SOFT STEEL	1		36		SOFT STEEL	1	
11	MOUNTING SCR.	SOFT STEEL	4		24	SET SCREW	SOFT STEEL	2		37	GASKET	LINEN	1	
12	BOLT	SOFT STEEL	4		25	SET SCREW	SOFT STEEL	2		38	COVER	CAST IRON	1	
13	NAME PLATE	CELLULOID	1		26	GASKET	LEATHER	2		39	MOUNTING PANEL	SOFT STEEL	1	

No.	DESCRIPTION	MATERIAL	QUAN.	NOTES
40	NAME PLATE	SOFT IRON	1	
41	NUT	SOFT STEEL	1	
42	STOP SCREW	SOFT STEEL	1	
43	BEARING	BRONZE	1	
44	PRESS PLATE	SOFT STEEL	1	
45	BALL BEARING		1	
46	GASKET	FELT	1	
47	RECTIFIER PACK		1	
48	BOBBIN	BAKELITE	1	
49			1	
50			1	
51			1	
52			1	

Figure 219
PROPELLER SHAFT RPM SYSTEM -
VOLTAGE TYPE SPEED TRANSMITTER

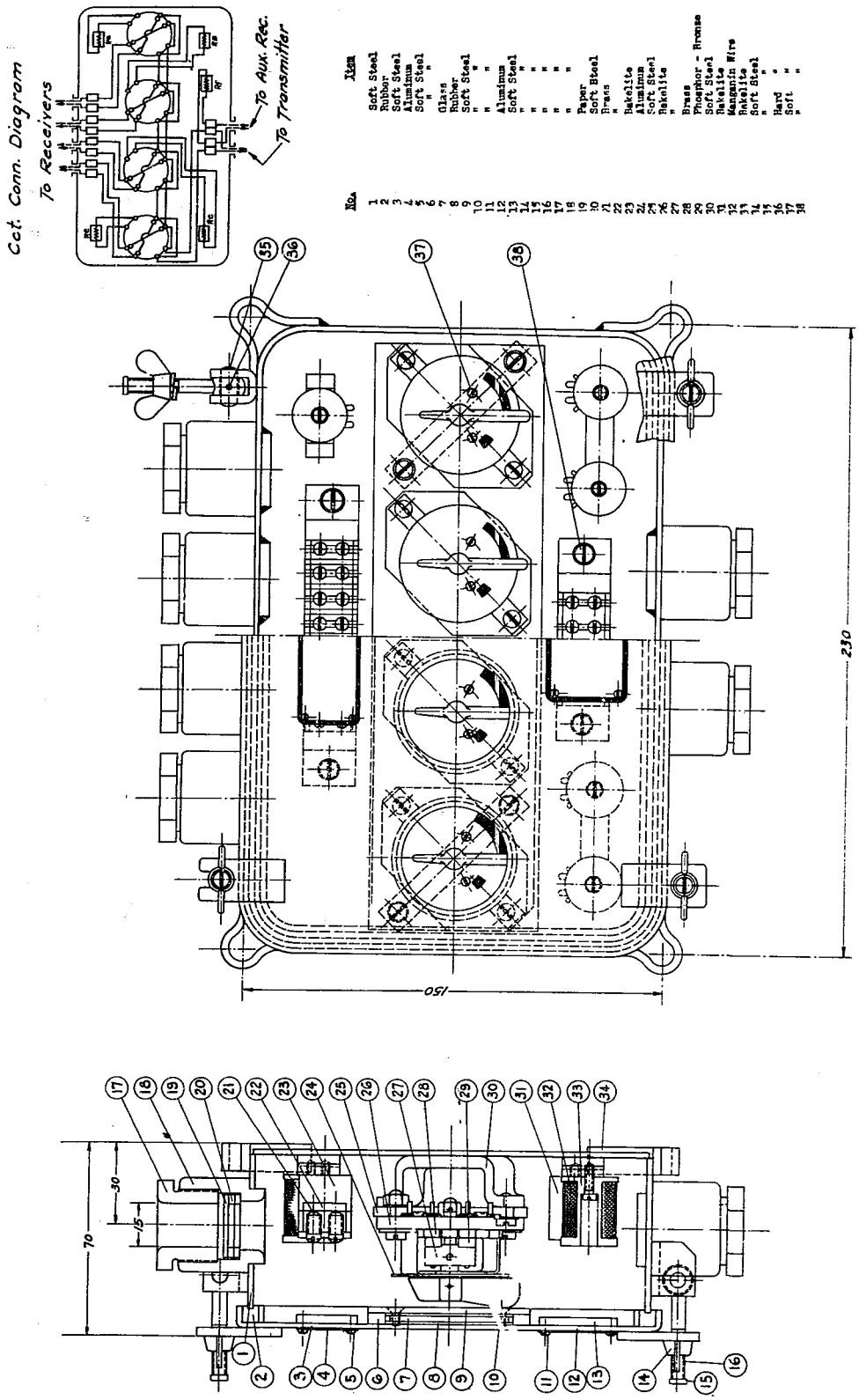

Figure 220
PROPELLER SHAFT RPM SYSTEM - RECEIVER JUNCTION BOX

No.	Item
1	Bar
2	Cover
3	Pressure Ring
4	Attachment Screw for the Above
5	Glass Plate
6	Packing
7	"
8	Attachment Plate
9	Fitting for Attaching Scale Plate
10	Auxiliary Support for Core
11	Core
12	Needle
13	Spring Recess
14	Bearing Screw
15	Washer
16	Stud
17	Attachment Plate
18	Coil Phase Support Strip
19	Pole Piece
20	Spring Stop Screw
21	Pole Piece Support Strip
22	Connecting Strip
23	Connecting Strip Attachment Base
24	Bushing
25	Ring
26	Spool
27	Spool Attachment Plate
28	Thumb Screw
29	Signal Panel
30	Thumb Screw
31	Washer
32	Nameplate Attachment Plate
33	Nameplate
34	Terminal Cover
35	Packing
36	Terminal Washer
37	Socket for the Above
38	Small Screws
39	No. 3a Watertight Stud
40	"
41	"
42	"
43	"

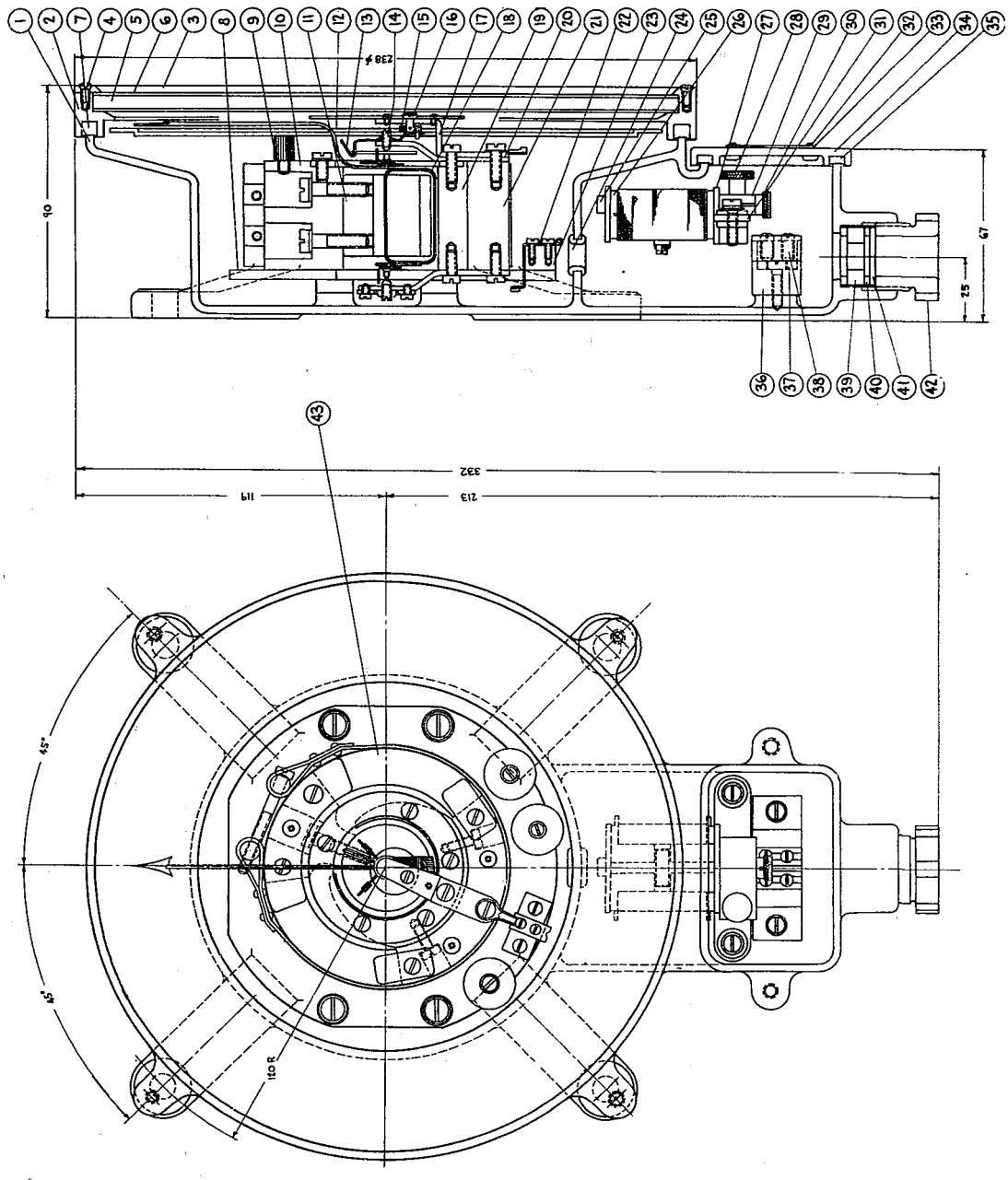

Figure 221
PROPELLER SHAFT RPM SYSTEM - VOLTAGE RECEIVER TYPE (NON - ILLUMINATED)

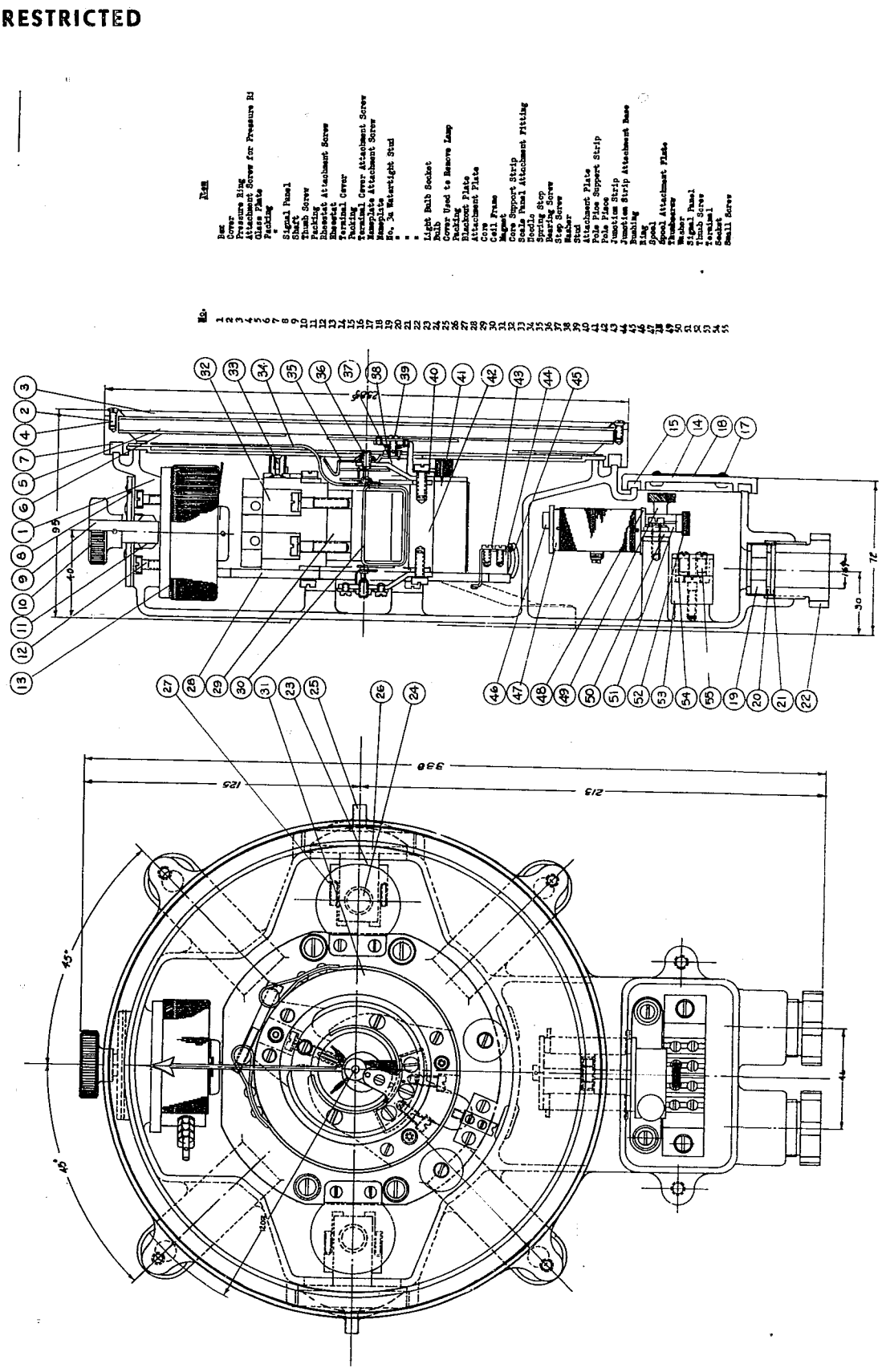

Figure 222
PROPELLER SHAFT RPM SYSTEM - VOLTAGE RECEIVER TYPE (ILLUMINATED)

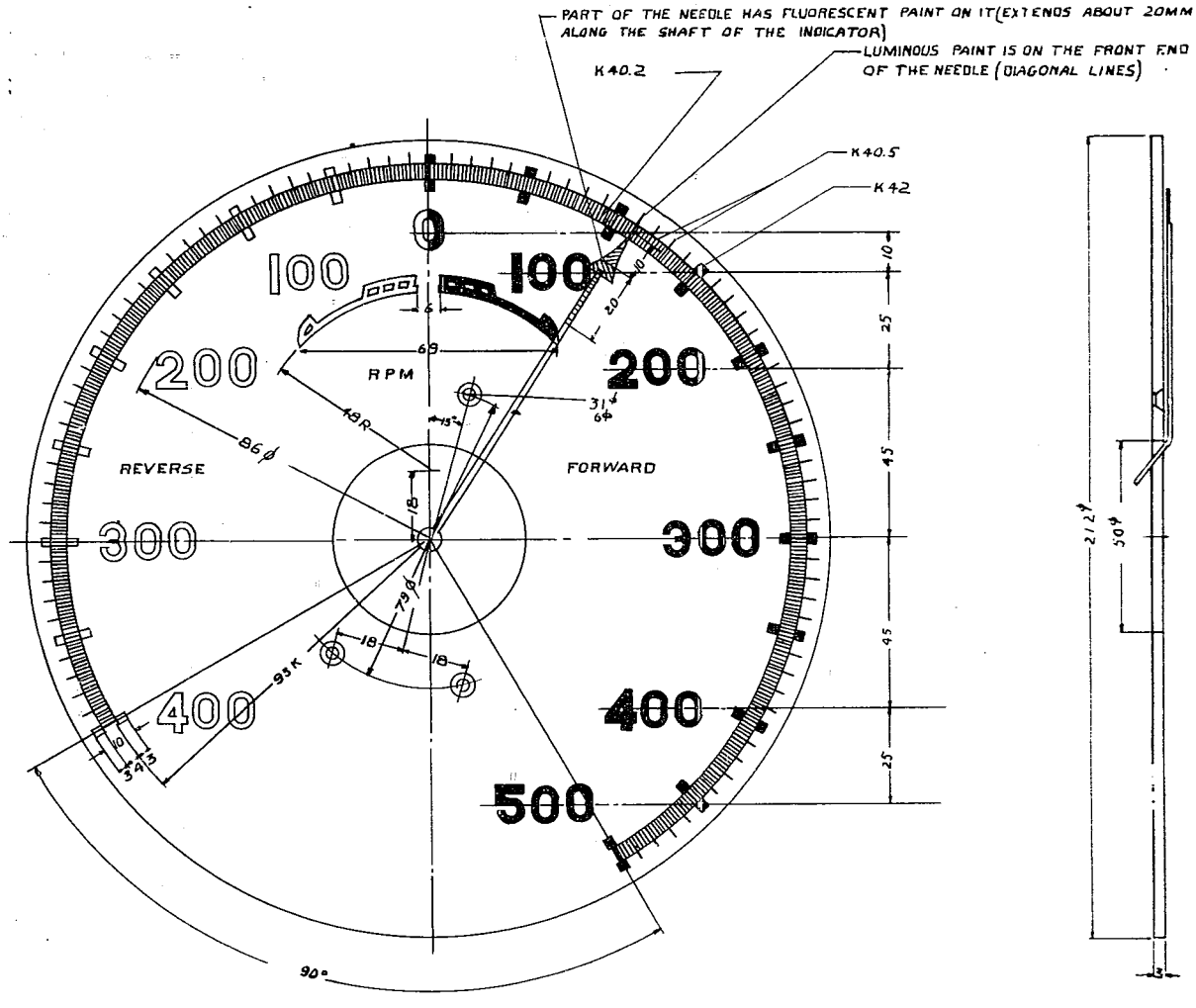

NOTES

1. THE BASE IS BLACK
2. THE CALIBRATIONS, LETTERS, NUMBERS & ARROW ON THE "ADVANCE" SIDE ARE WHITE
3. THE ABOVE ARE RED ON THE "REVERSE" SIDE
4. THE "O" IS HALF-RED, HALF-WHITE
5. THE BACKGROUND IS A SPECIAL TYPE GREEN PAINT
6. THE CALIBRATIONS ARE ENGRAVED

Figure 223
PROPELLER SHAFT RPM SYSTEM
RECEIVER DIAL

readings with the forward indications to the right and reverse indications to the left. The indicators are made in two types: illuminated dial and luminous pointer. The illuminated type has a marblite dial with two small lamps behind it. The lamps are operated from a 15-20 volt D.C. power supply. A series rheostat is mounted in the indicator for regulating the intensity of illumination. Some of the inherent inaccuracy of readings has been offset by the length of scale allowed by use of a 270° meter movement.

The mechanical register is a Veeder type counter which is geared to the propeller shaft and provides a record of the total revolutions for any given time or run.

9. Gyro Compass System

There are two types of gyro compasses used in vessels of the Japanese Navy. Both types are copies, made in Japan, one being a Sperry (U. S.) type, the other an Anschutz (German) type. These compasses are of modern design and perform very satisfactorily although they are not considered equal to the latest types used by the U. S. Navy.

Both types of Japanese compasses are operated from an A.C. power supply of special frequency, furnished by M.G. set. Some modifications have been made in the original designs both in construction and in the electrical control circuits.

The Sperry type compass (Figure 224) was manufactured by the Tokyo Keiki Company, a licensee of the Sperry Company. Their latest model was a copy of the Sperry Mark V compass with a Mark XIV amplfier. (Figures 225 to 234 inclusive.)

The Anschutz type compass was manufactured by the Hokushiu Electric Company, a licensee of the Anschutz Company (Figures 235 to 243 inclusive. See also NavTechJap Document Number ND22-2799, "Type 3 Mark IV Gyro Compass Model 2 (Anschutz Type) - Instruction Manual".)

The repeaters are interchangeable between the two types of compasses.

Some experimental work has been done by the Tokyo Keiki Company on a Brown (British) compass but service results from the experimental models were not satisfactory.

Also, considerable research has been conducted at the Japanese Naval Technical Research Laboratory at MEIGURO, on the development of an original compass. This compass was based on the Sperry principle but incorporated an air-bearing support in place of the piano wire suspension. Details on this air-bearing were very vague as it had not progressed beyond the research stage and very little information had been made available to the Technical Department of the Japanese Navy Ministry.

Sample compass systems of each type are being forwarded to the United States.

10. Motion Picture Equipment

Motion picture equipment was used by the Japanese Navy for both entertainment and educational purposes. The equipment was assigned to naval bases where it was available for temporary assignment to ships. Motion picture equipment was not permanently assigned to Japanese naval vessels.

The equipment used was 35mm exclusively and was of two types, portable and semi-portable equipment are identical except for the projectors.

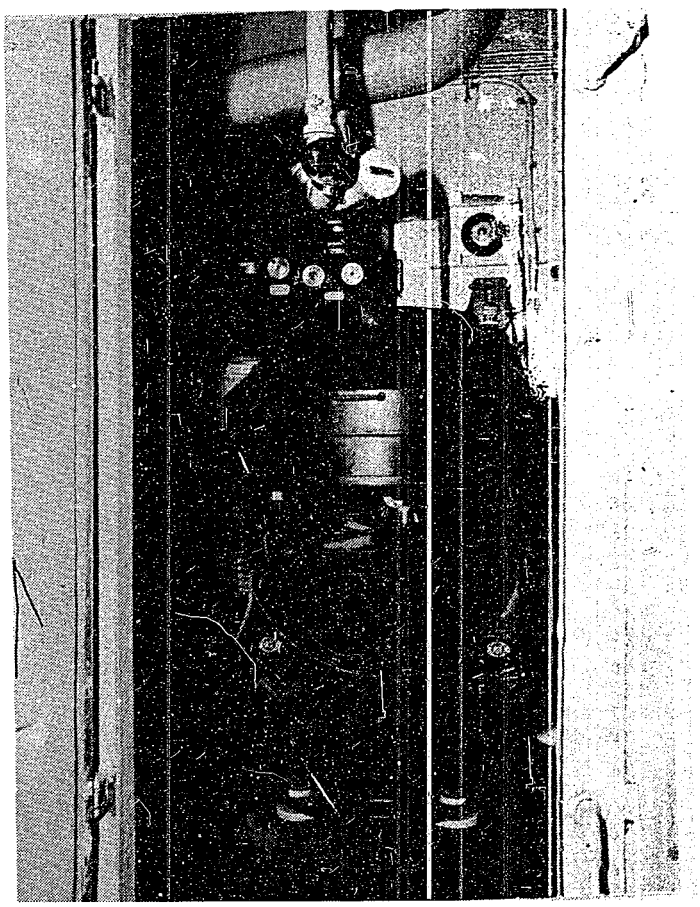

Figure 224
SPERRY TYPE GYRO COMPASS

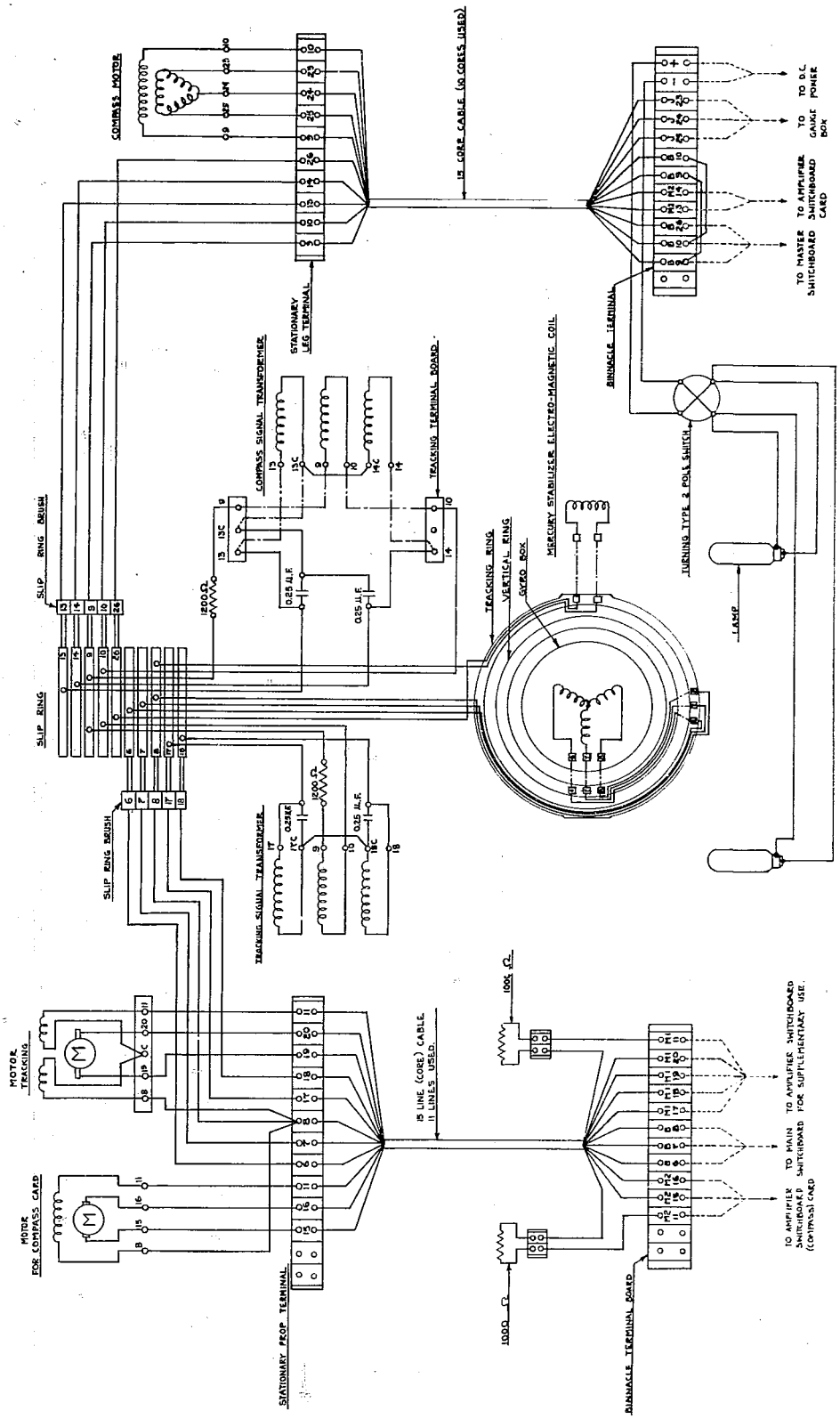

Figure 225
SPERRY TYPE COMPASS - CIRCUIT WIRING DIAGRAM

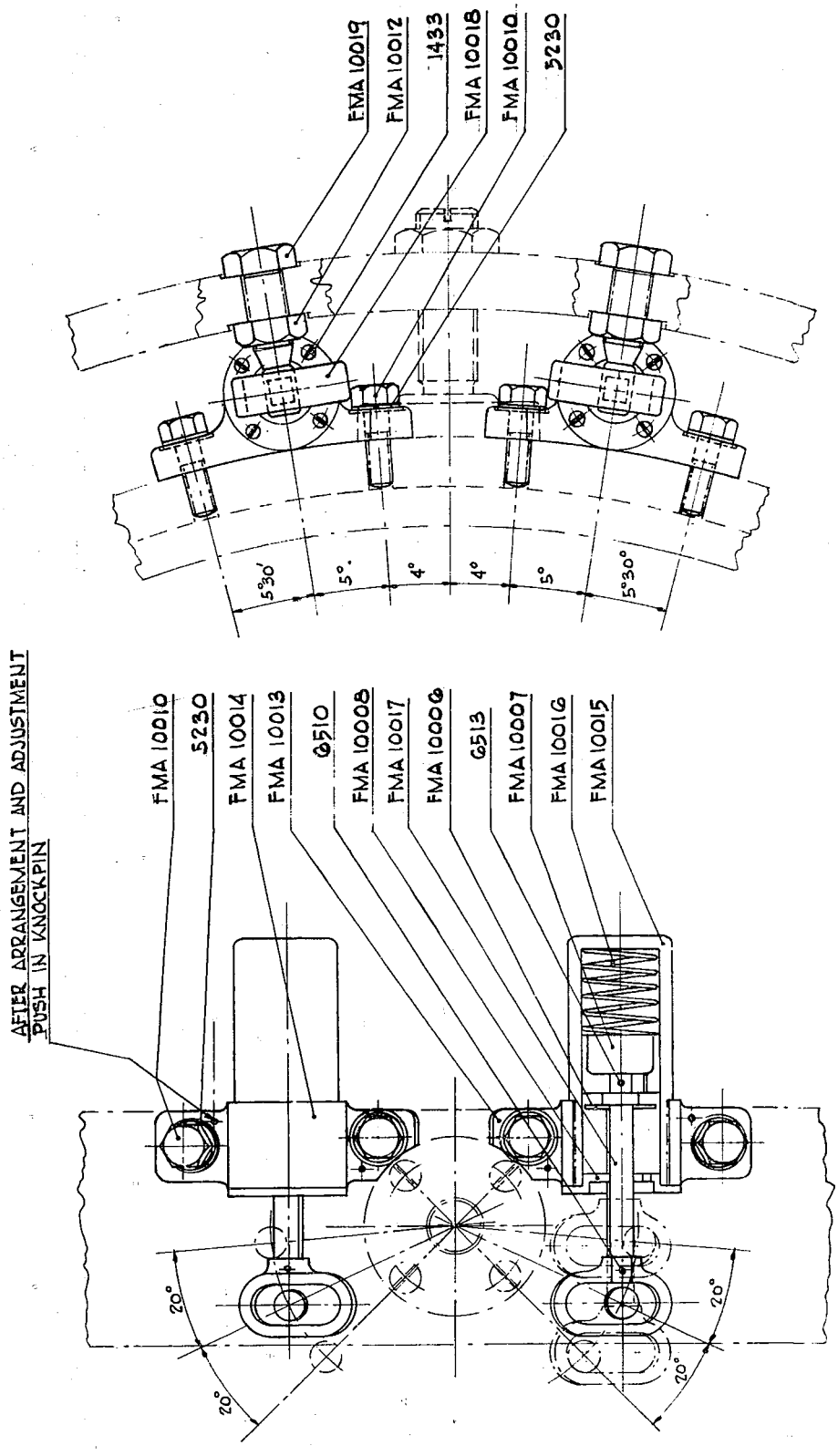

Figure 226
SPERRY TYPE COMPASS
RING DAMPING BRAKE

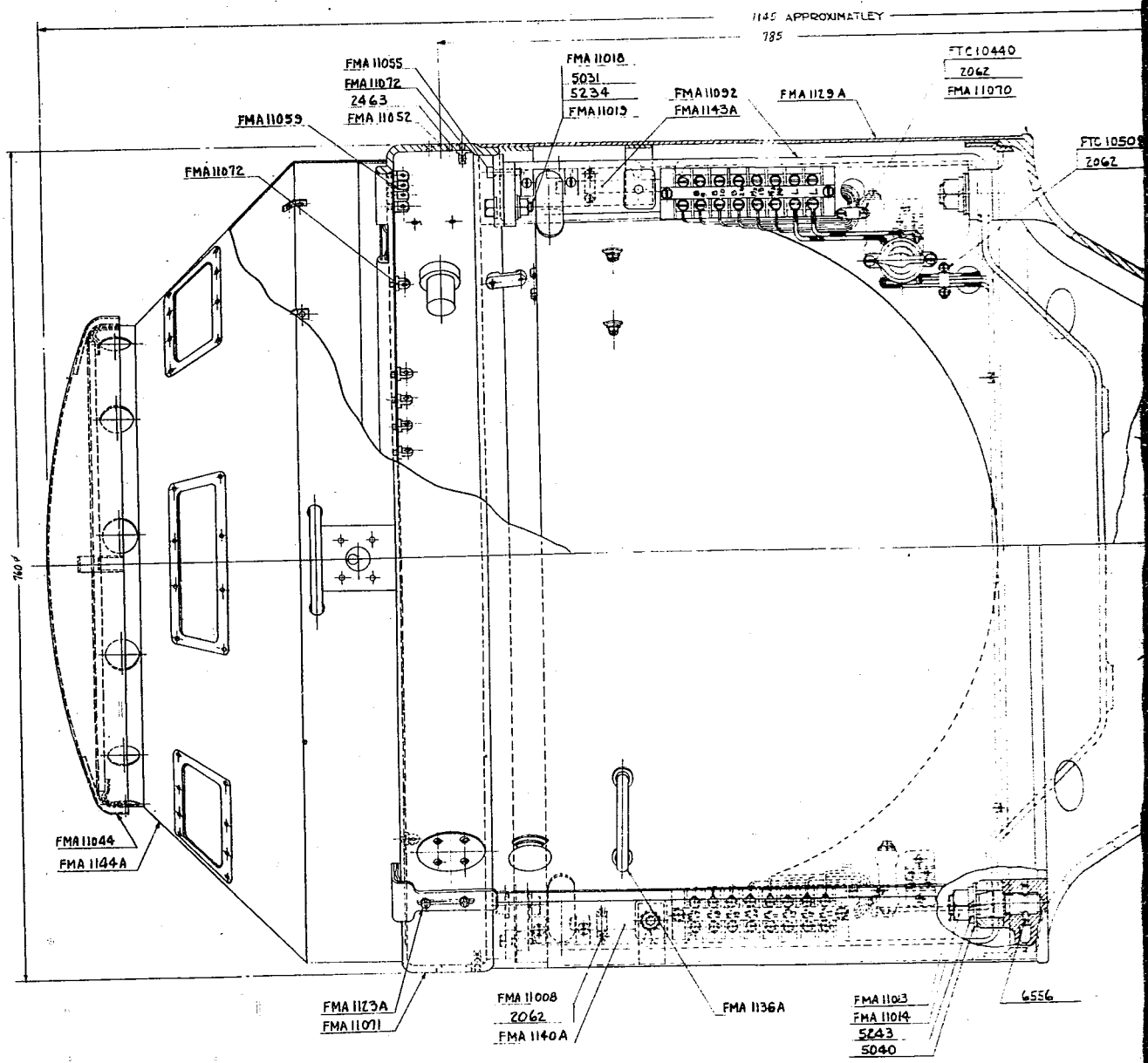

Figure 227
SPERRY TYPE COMPASS BINNACLE AND STAND

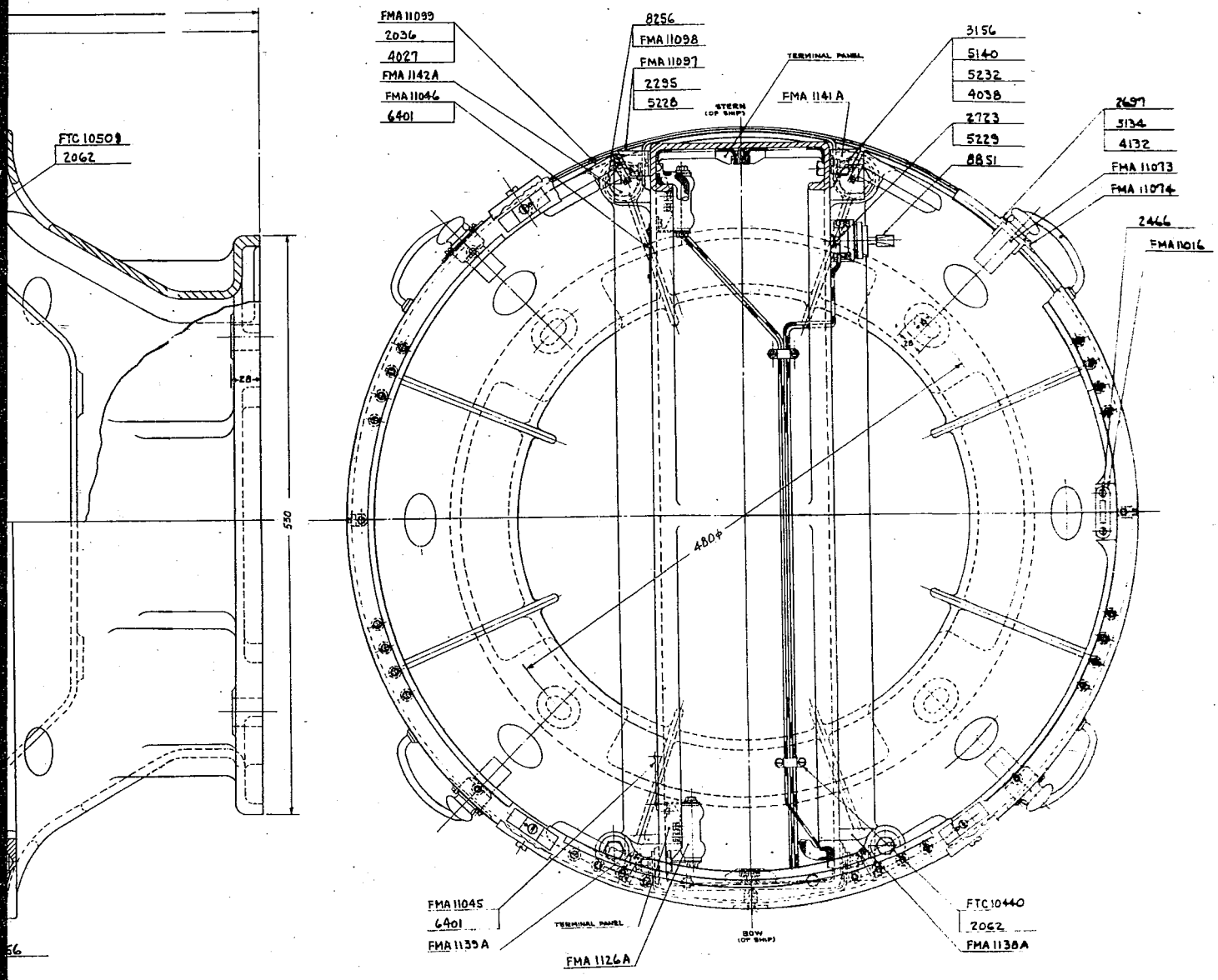
FMA 11099
2036
4027
FMA 1142A
FMA 11046
6401
8256
FMA 11098
FMA 11097
2295
5228
TERMINAL PANEL
STERN
(OF SHIP)
FMA 1141A
3156
5140
5232
4038
2723
5229
8851
2697
5134
4132
FMA 11073
FMA 11074
2466
FMA 11016
FTC 10502
2062
530
480ϕ
FMA 11045
6401
FMA 1139A
TERMINAL PANEL
FMA 1126A
BOW
(OF SHIP)
FTC 10440
2062
FMA 1138A

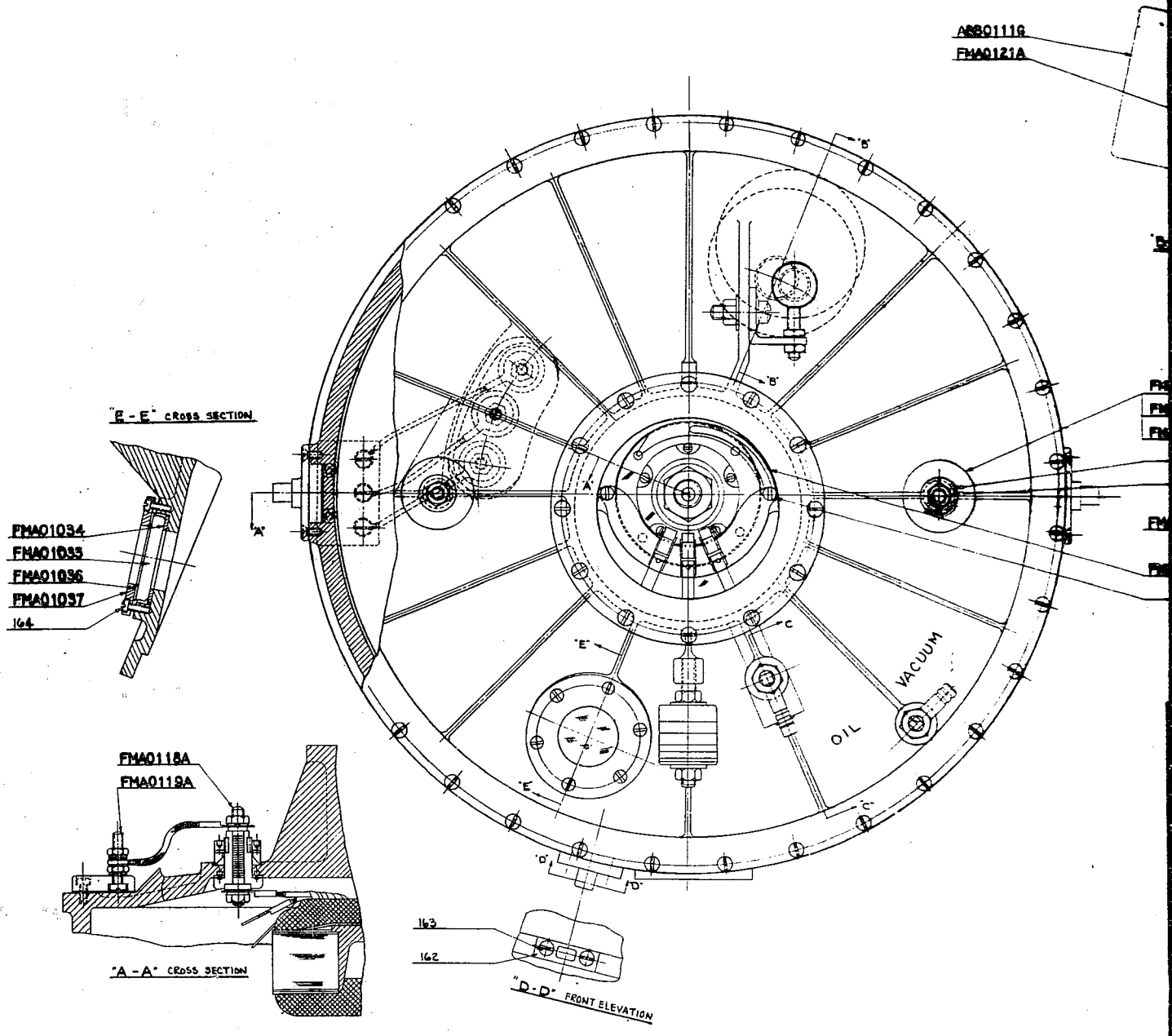

Figure 228
SPERRY TYPE COMPASS

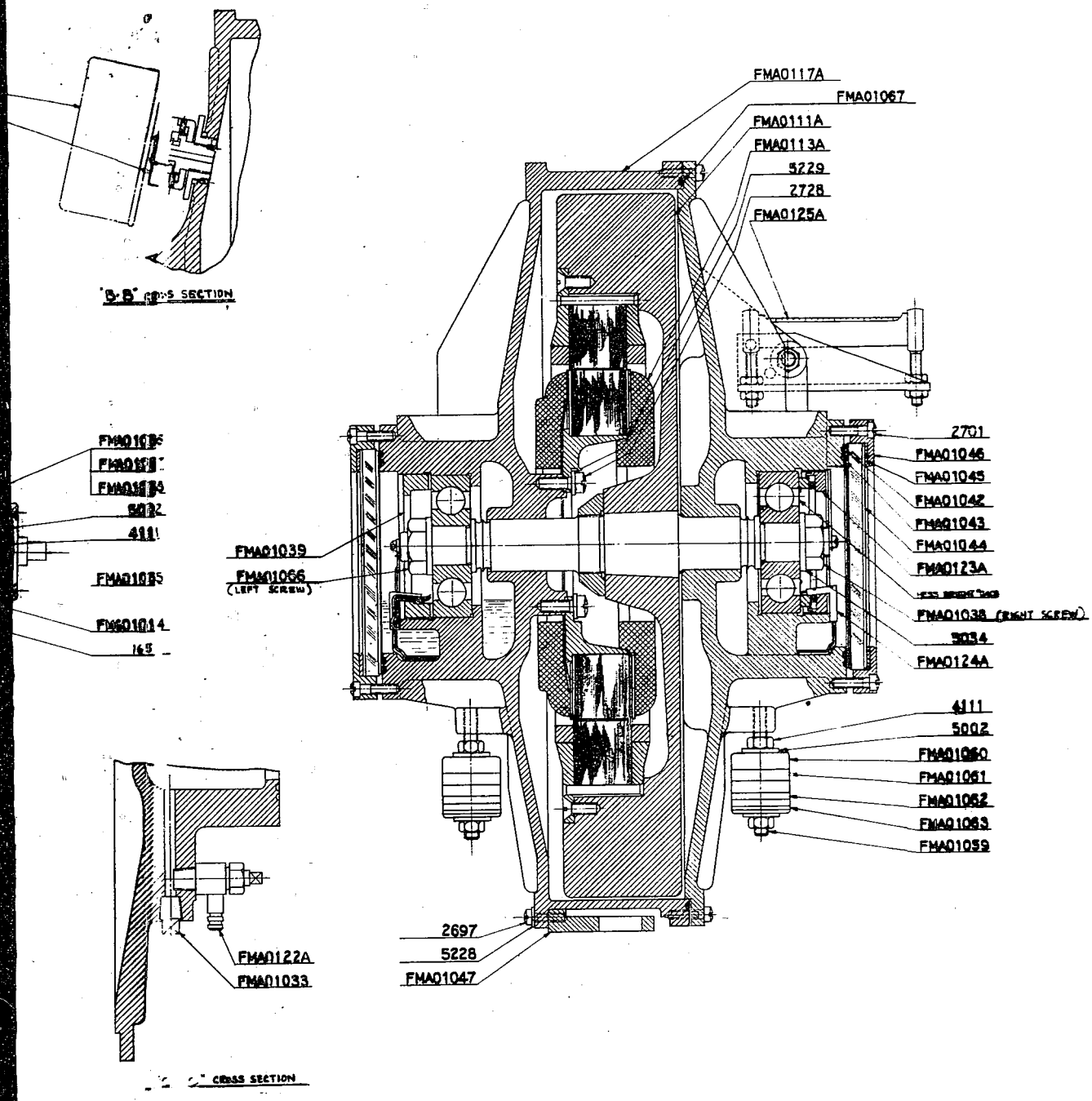

Figure 228
COMPASS – GYRO BOX

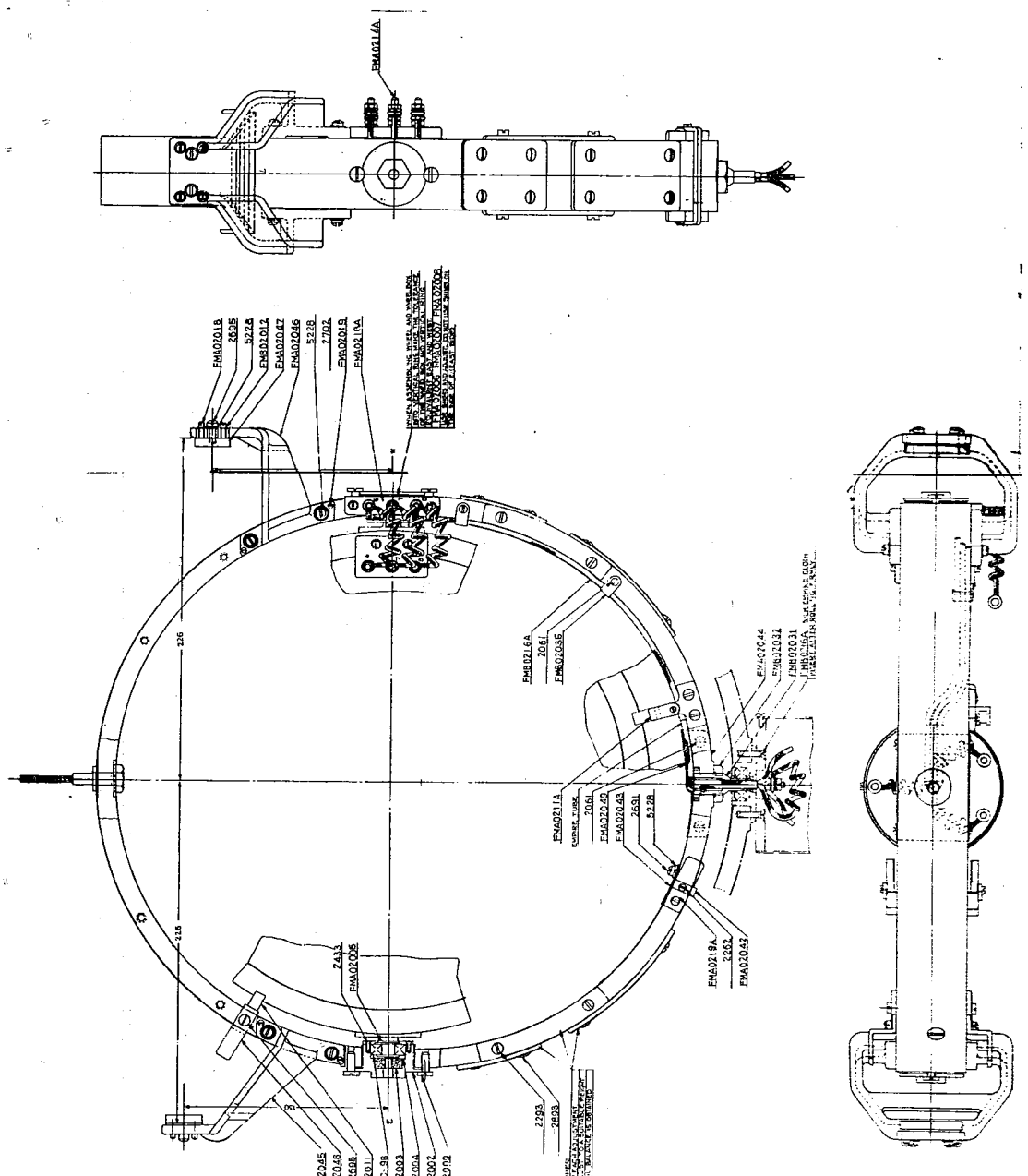

Figure 229
SPERRY TYPE COMPASS - VERTICAL RING

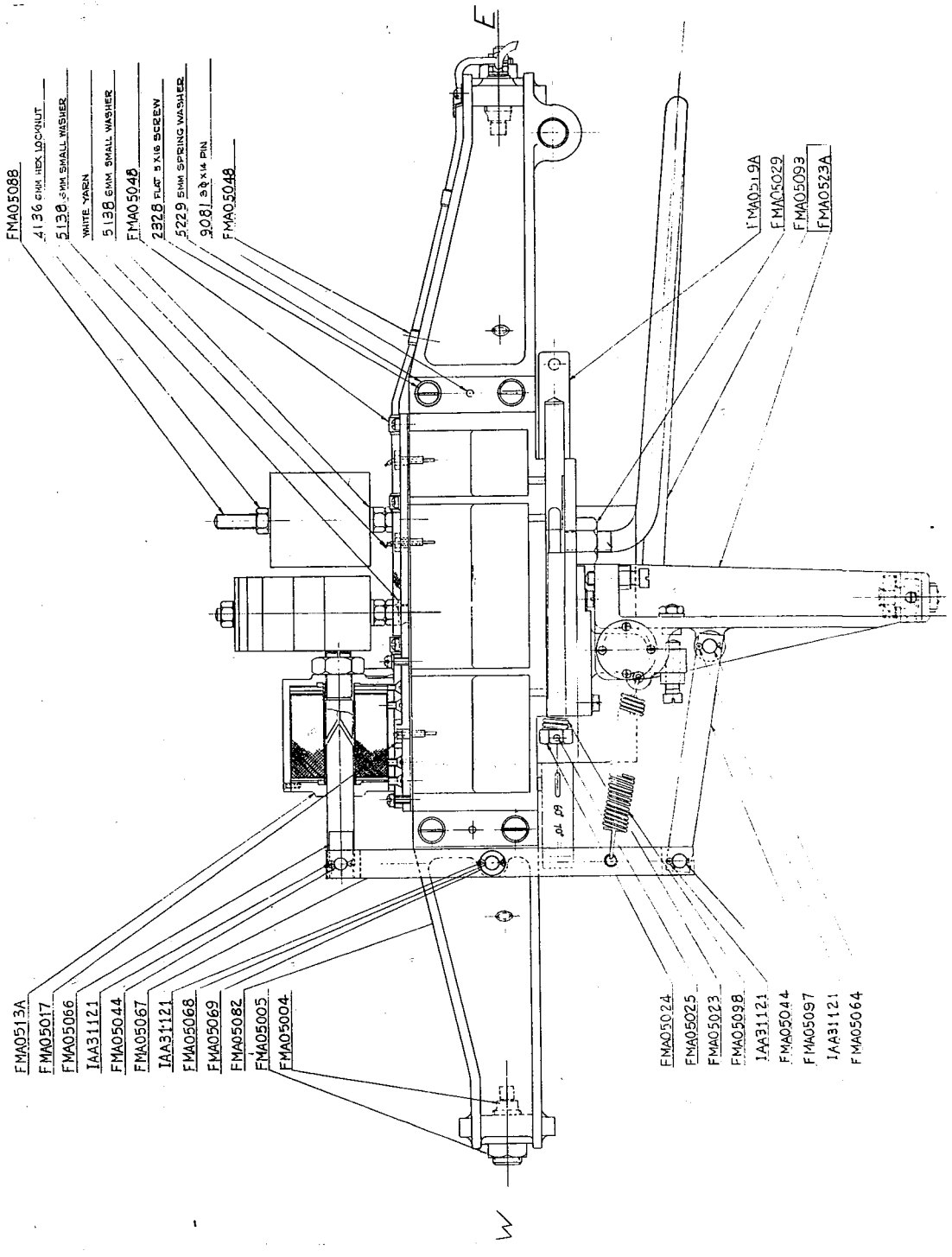

Figure 230
SPERRY TYPE COMPASS - MERCURY
STABILIZER (FRONT)

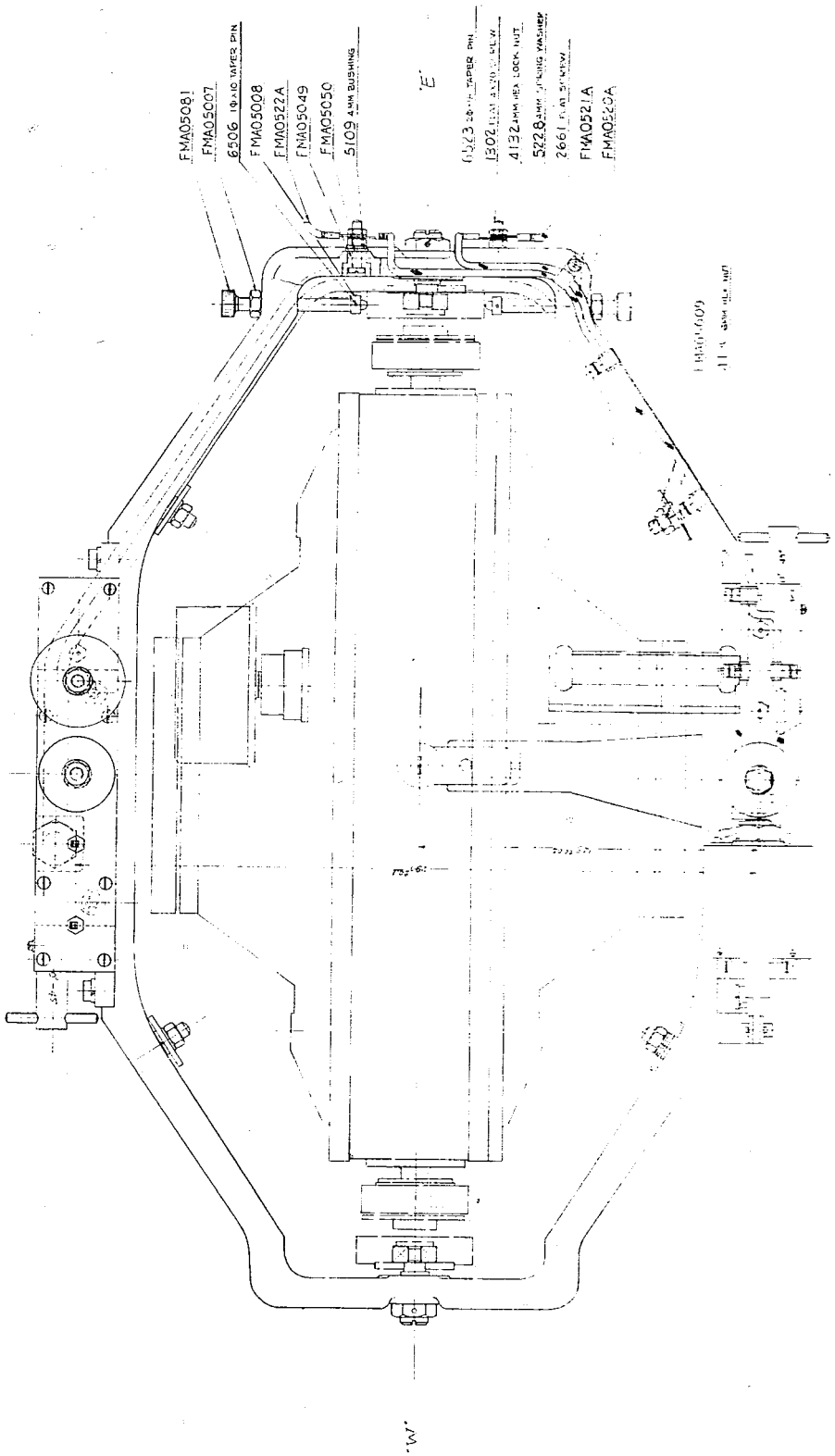

Figure 231
SPERRY TYPE COMPASS - MERCURY STABILIZER (TOP)

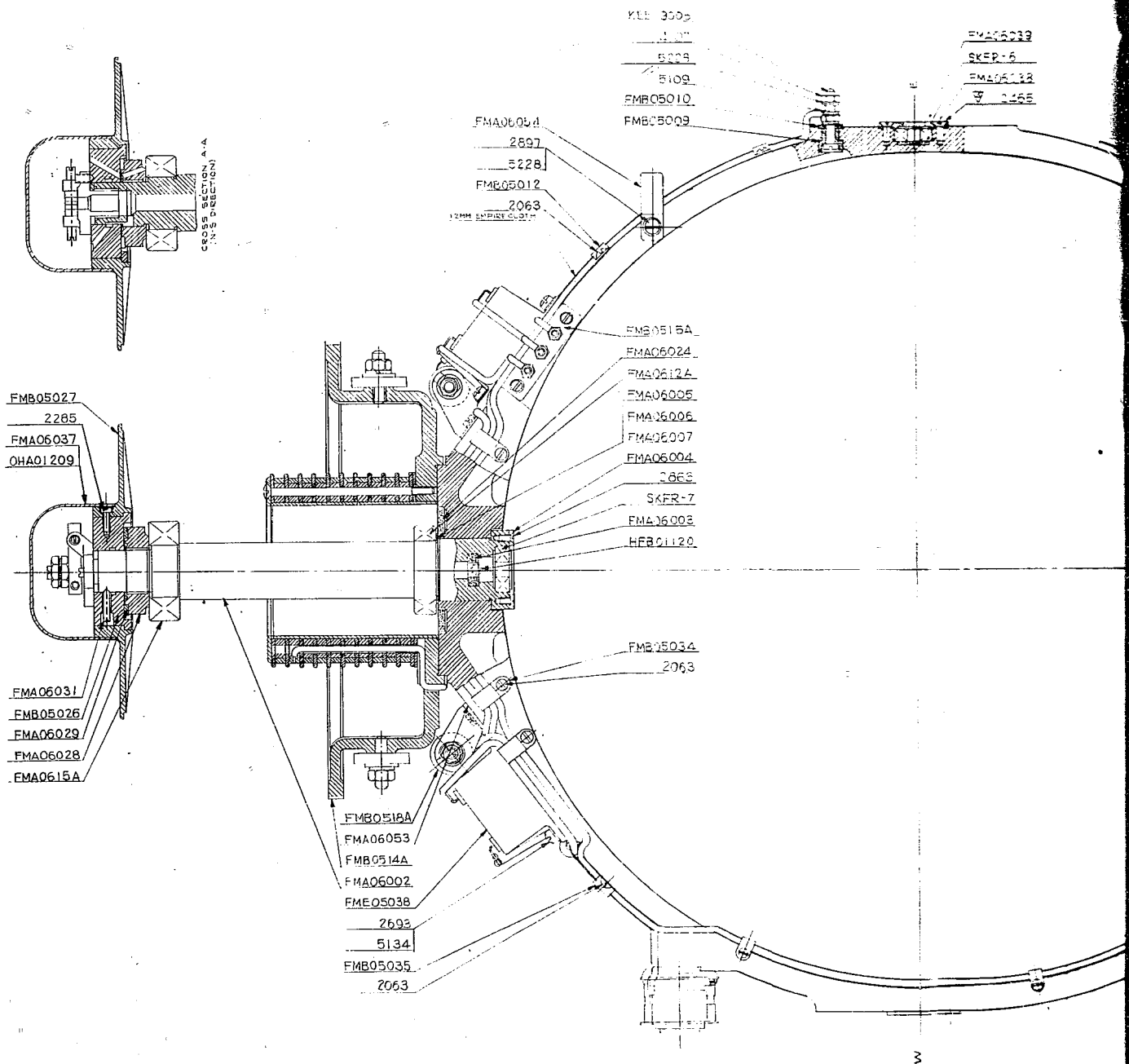

Figure 232
SPERRY TYPE COMPASS - TRACKING F

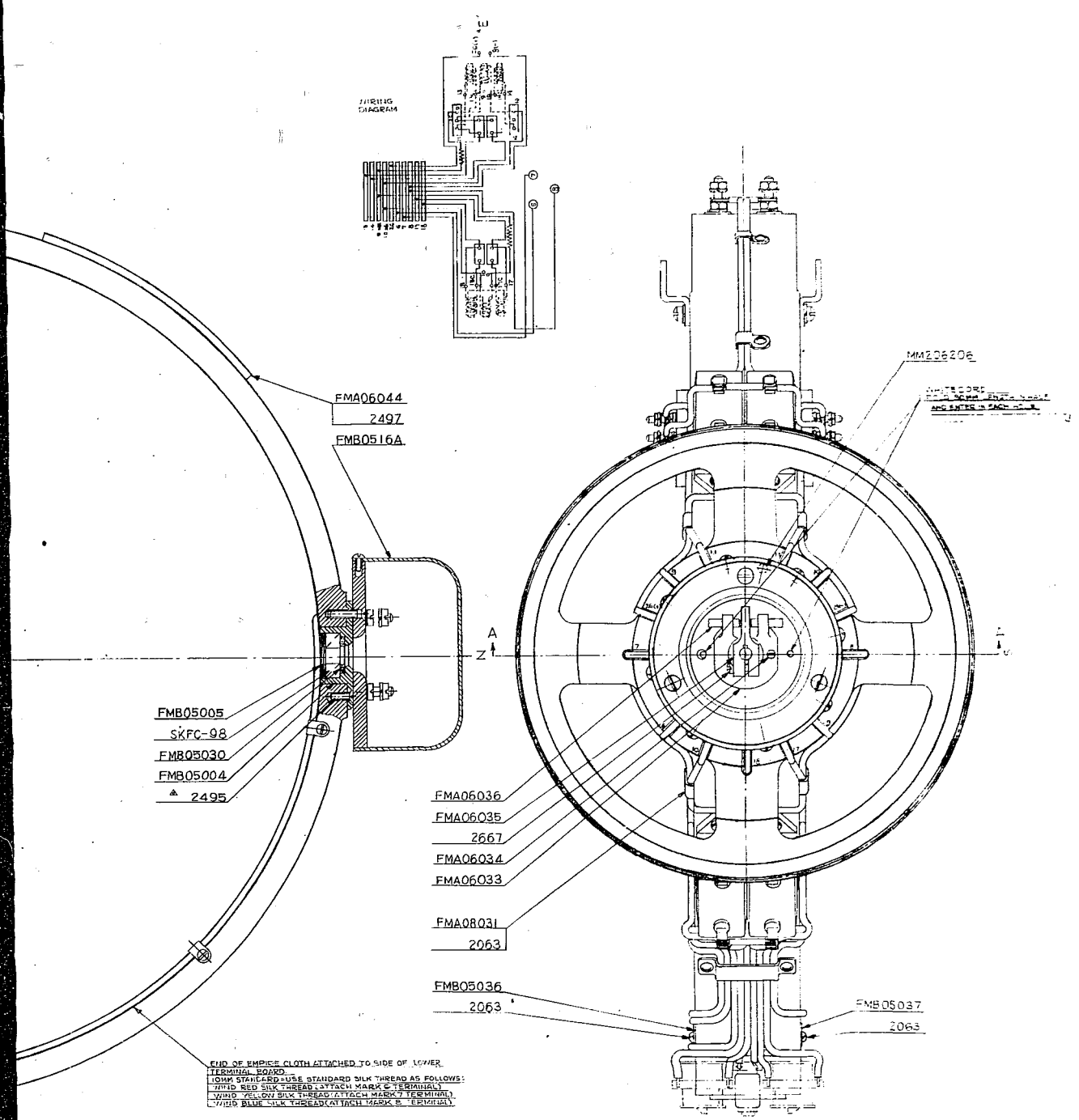
WIRING DIAGRAM
MM206206
FMA06044
2497
FMB0516A
FMB05005
SKFC-98
FMB05030
FMB05004
▲ 2495
A
Z
FMA06036
FMA06035
2667
FMA06034
FMA06033
FMA08031
2063
FMB05036
2063
FMB05037
2063
END OF EMPIRE CLOTH ATTACHED TO SIDE OF LOWER TERMINAL BOARD.
(OMP STANDARD-USE STANDARD SILK THREAD AS FOLLOWS:
WIND RED SILK THREAD (ATTACH MARK 6 TERMINAL)
WIND YELLOW SILK THREAD (ATTACH MARK 7 TERMINAL)
WIND BLUE SILK THREAD (ATTACH MARK 8 TERMINAL)

NG RING

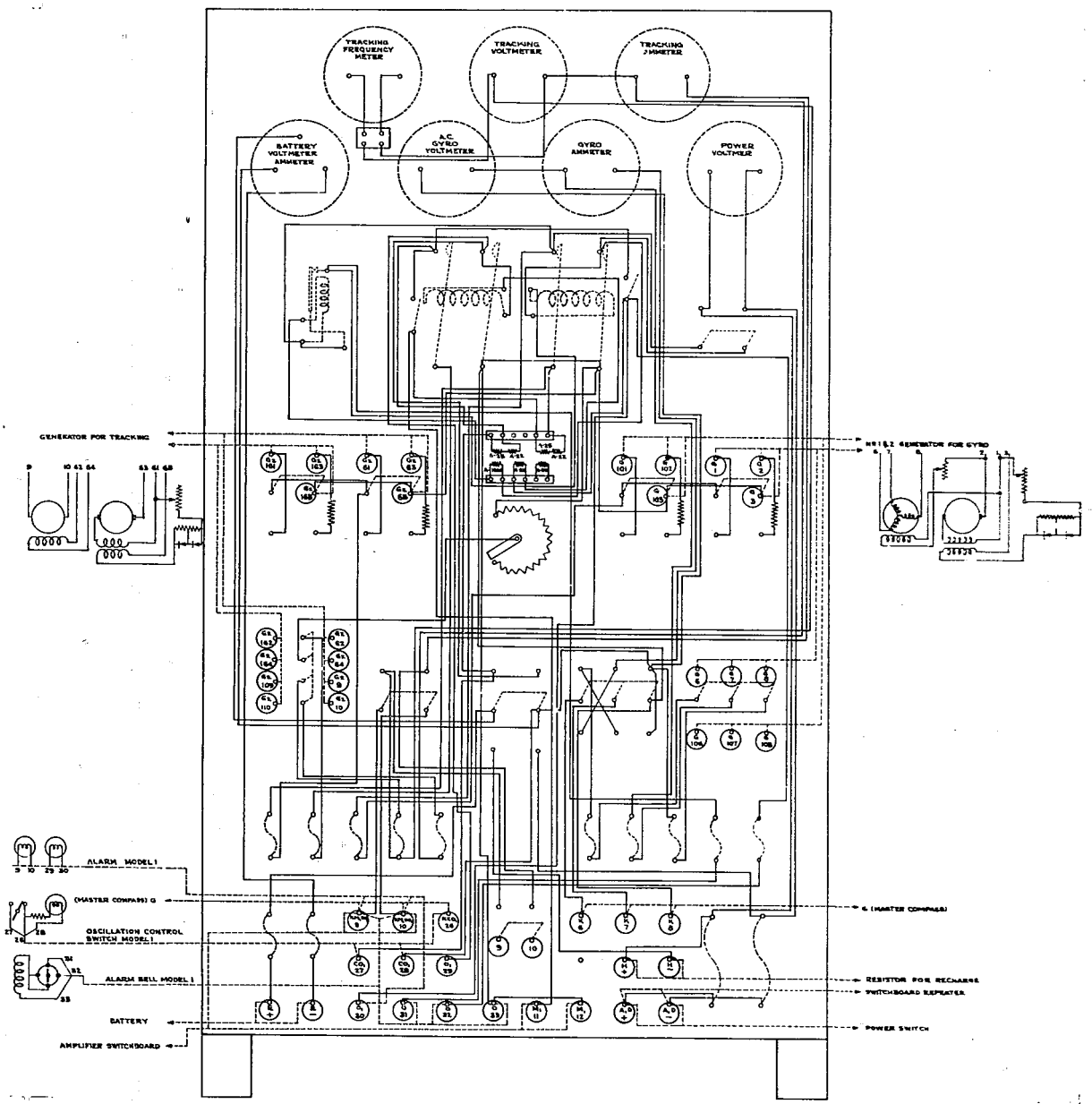

Figure 233
SPERRY TYPE COMPASS - MAIN SWITCHBOARD

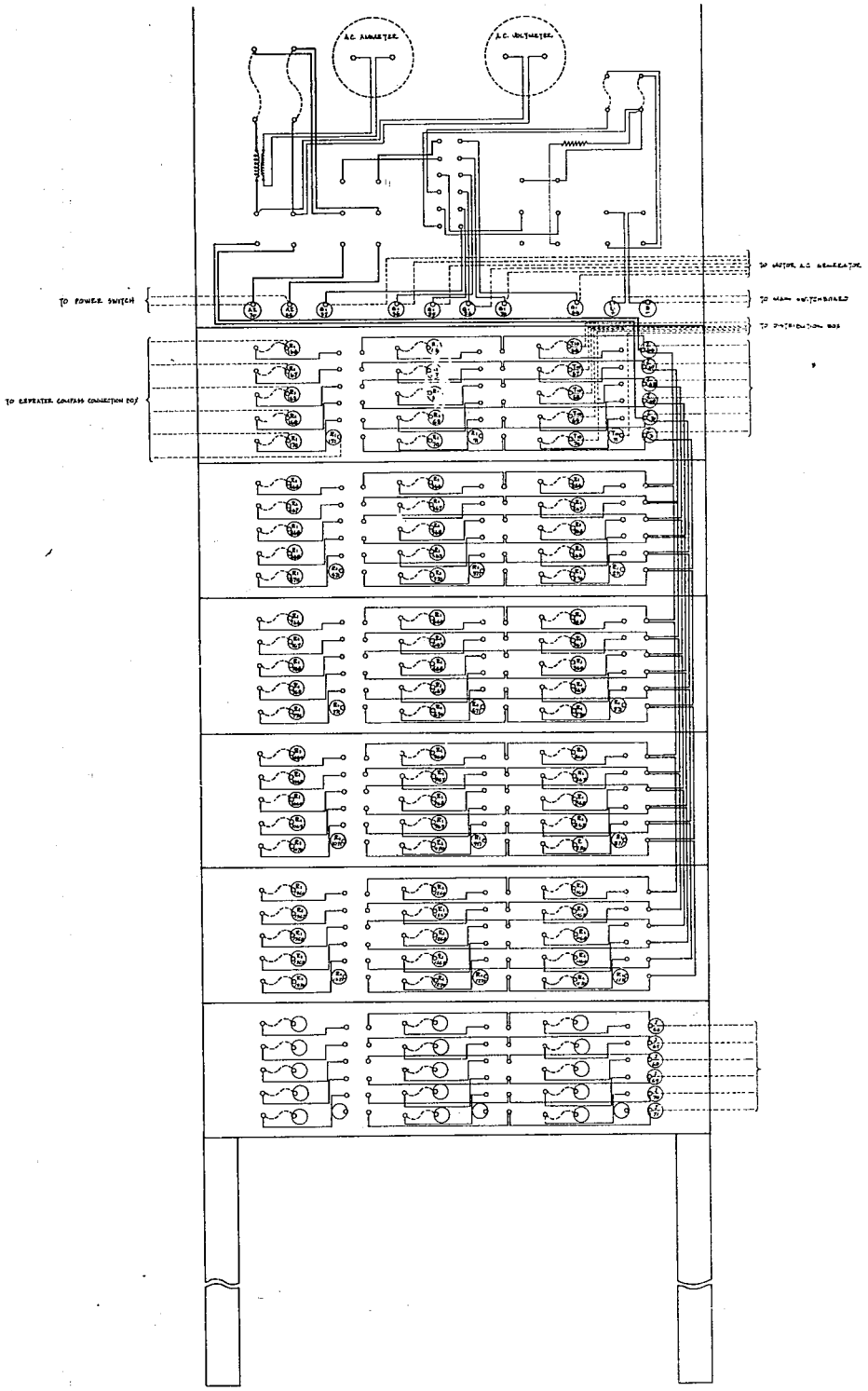

Figure 234
SPERRY TYPE COMPASS -
REPEATER SWITCHBOARD

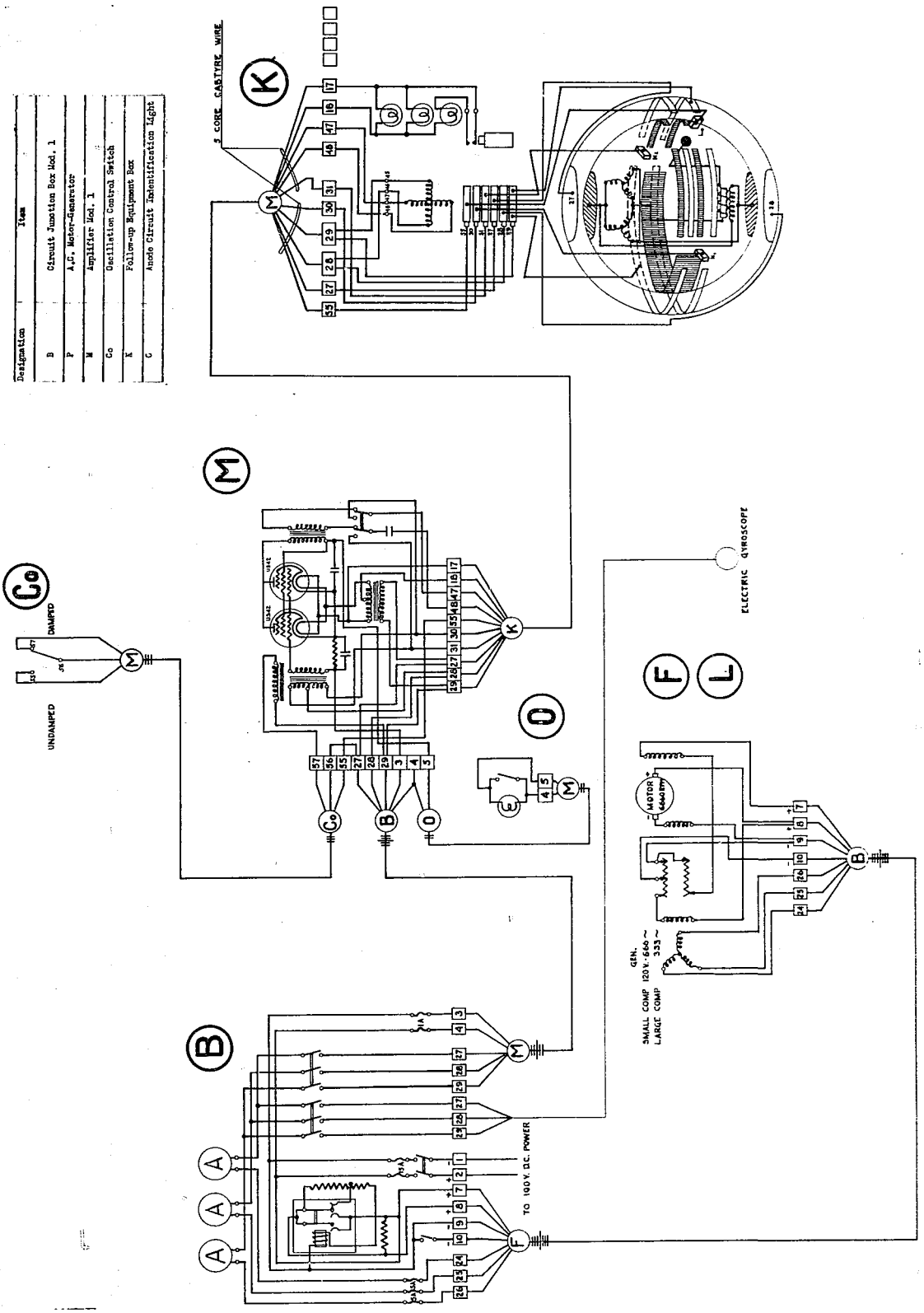

Figure 235
ANSCHUTZ TYPE COMPASS - CIRCUIT DIAGRAM

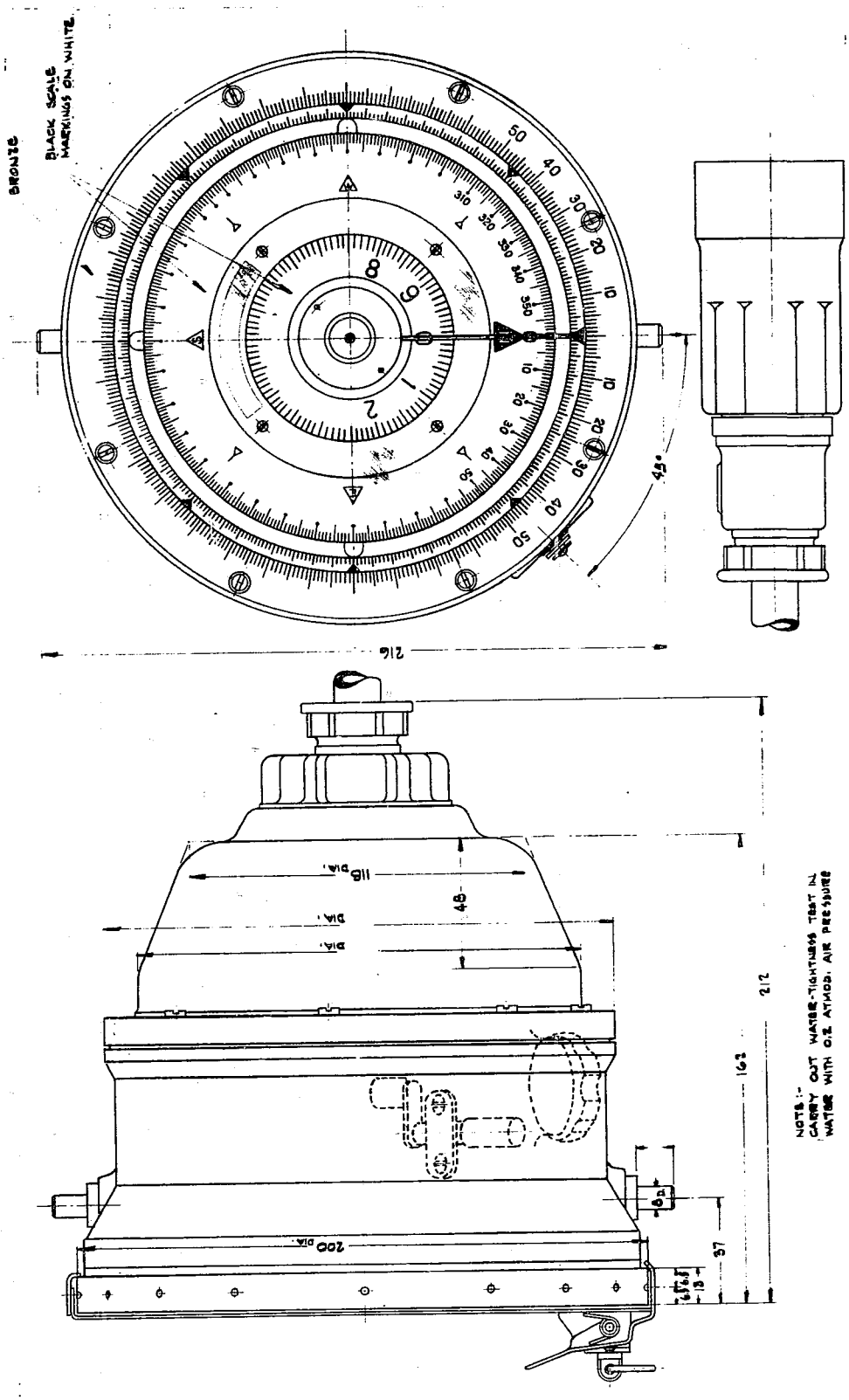

Figure 236
ANSCHUTZ TYPE COMPASS - REPEATER DIAL

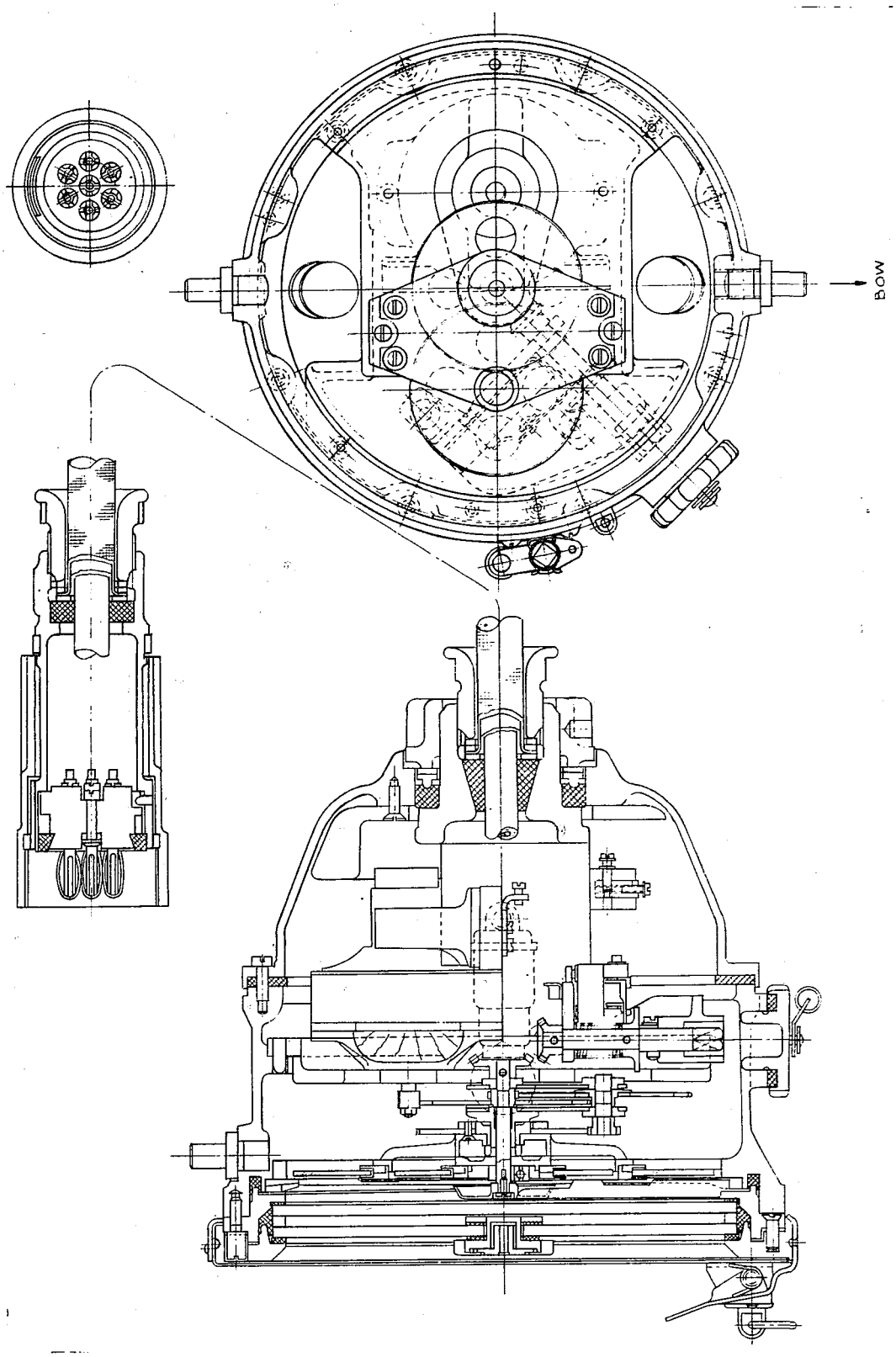

Figure 237
ANSCHUTZ TYPE COMPASS - REPEATER ASSEMBLY

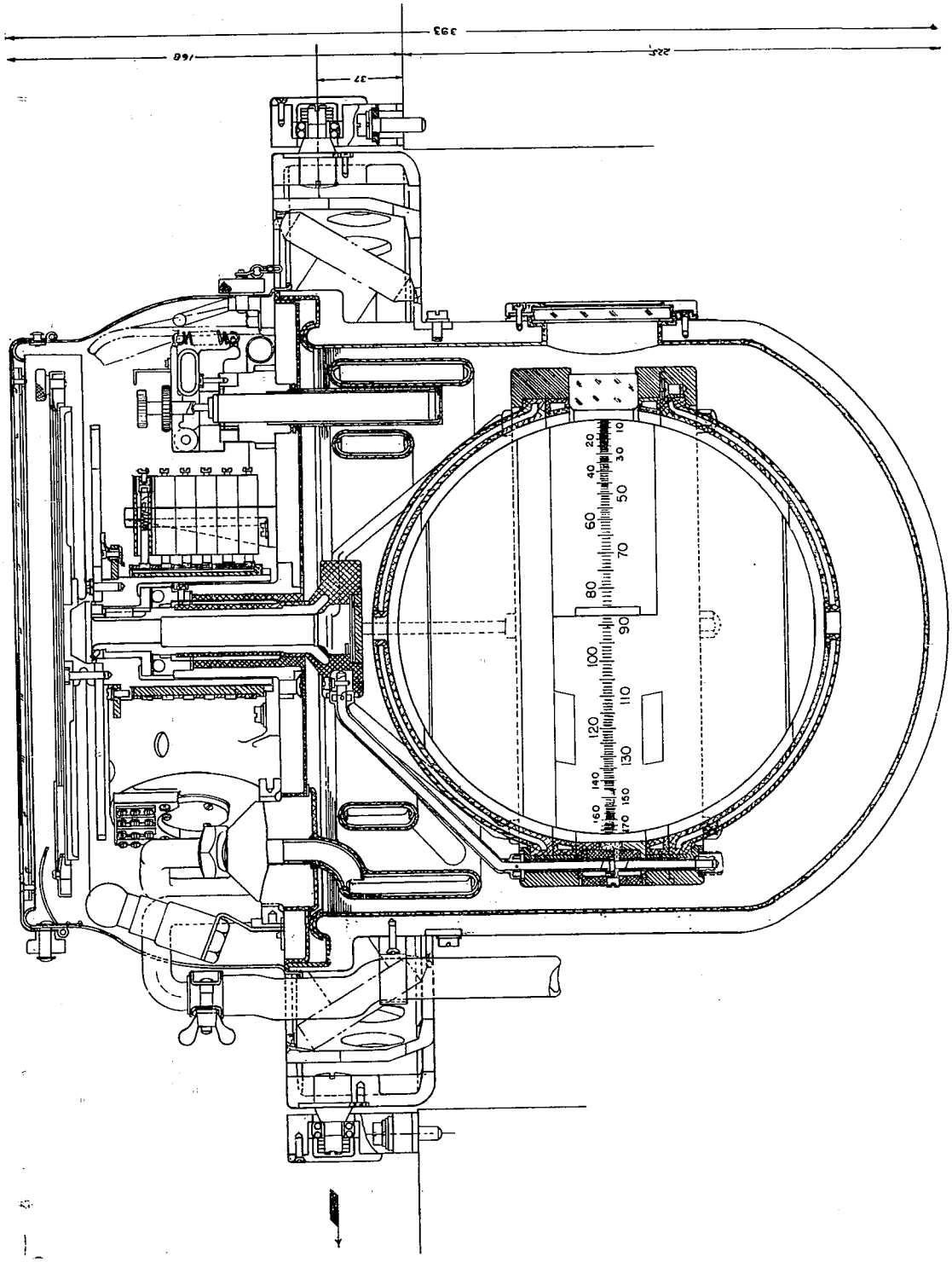

Figure 238
ANSCHUTZ TYPE COMPASS - MASTER
COMPASS ASSEMBLY

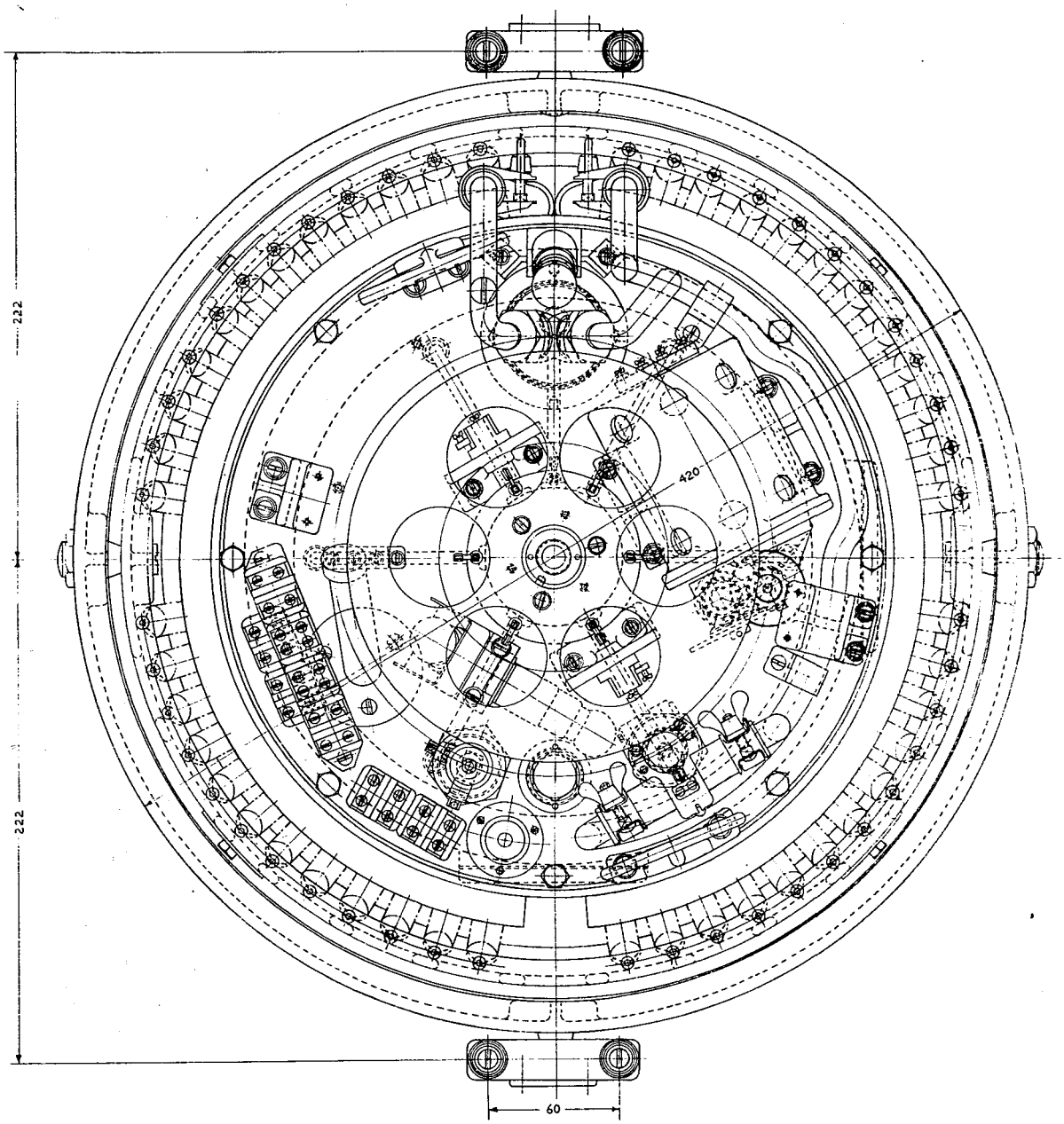

Figure 239
ANSCHUTZ TYPE COMPASS - MASTER
COMPASS ASSEMBLY (TOP)

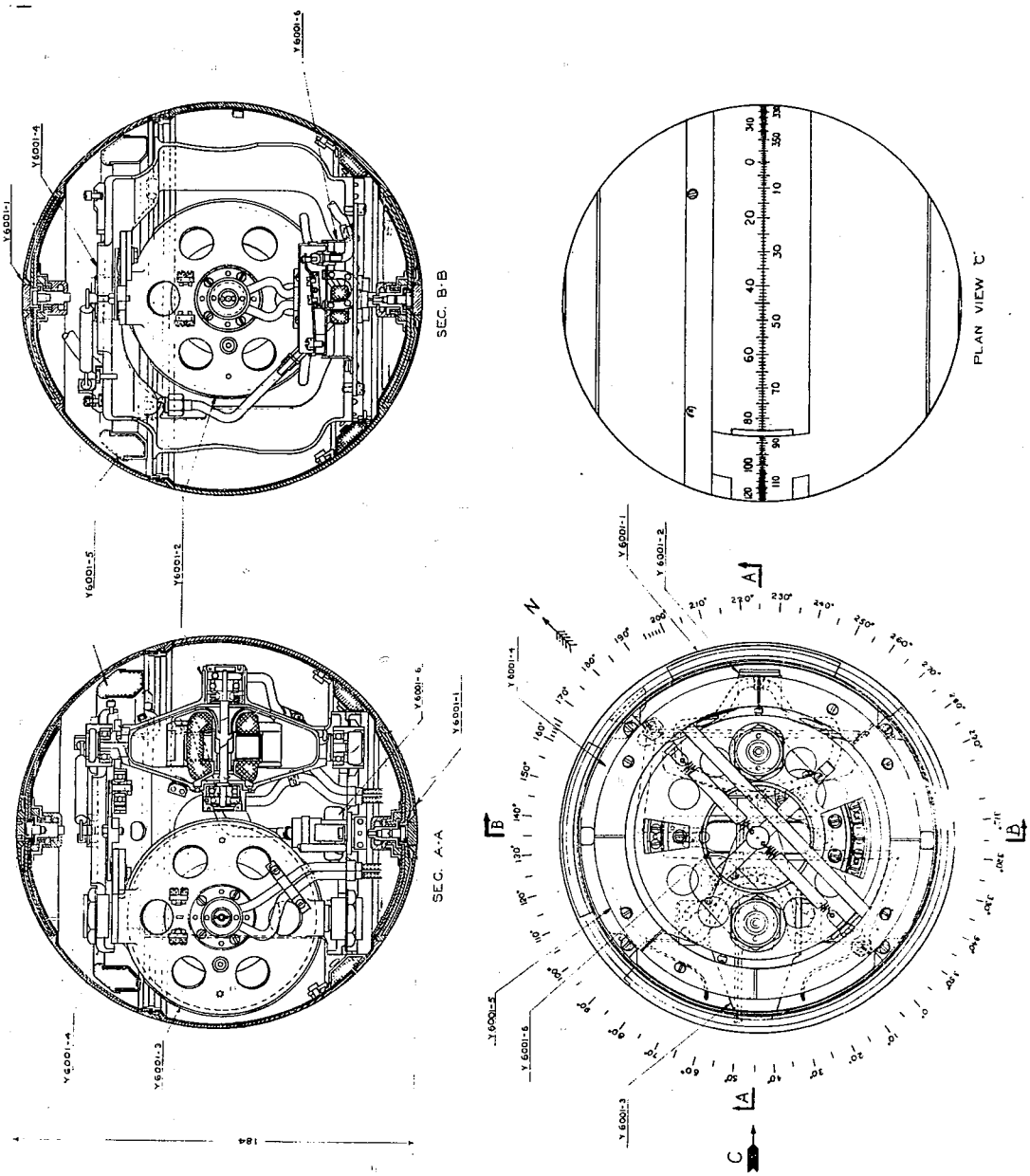

Figure 240
..NSCHUTZ TYPE COMPASS - MASTER
COMPASS ROTOR ASSEMBLY

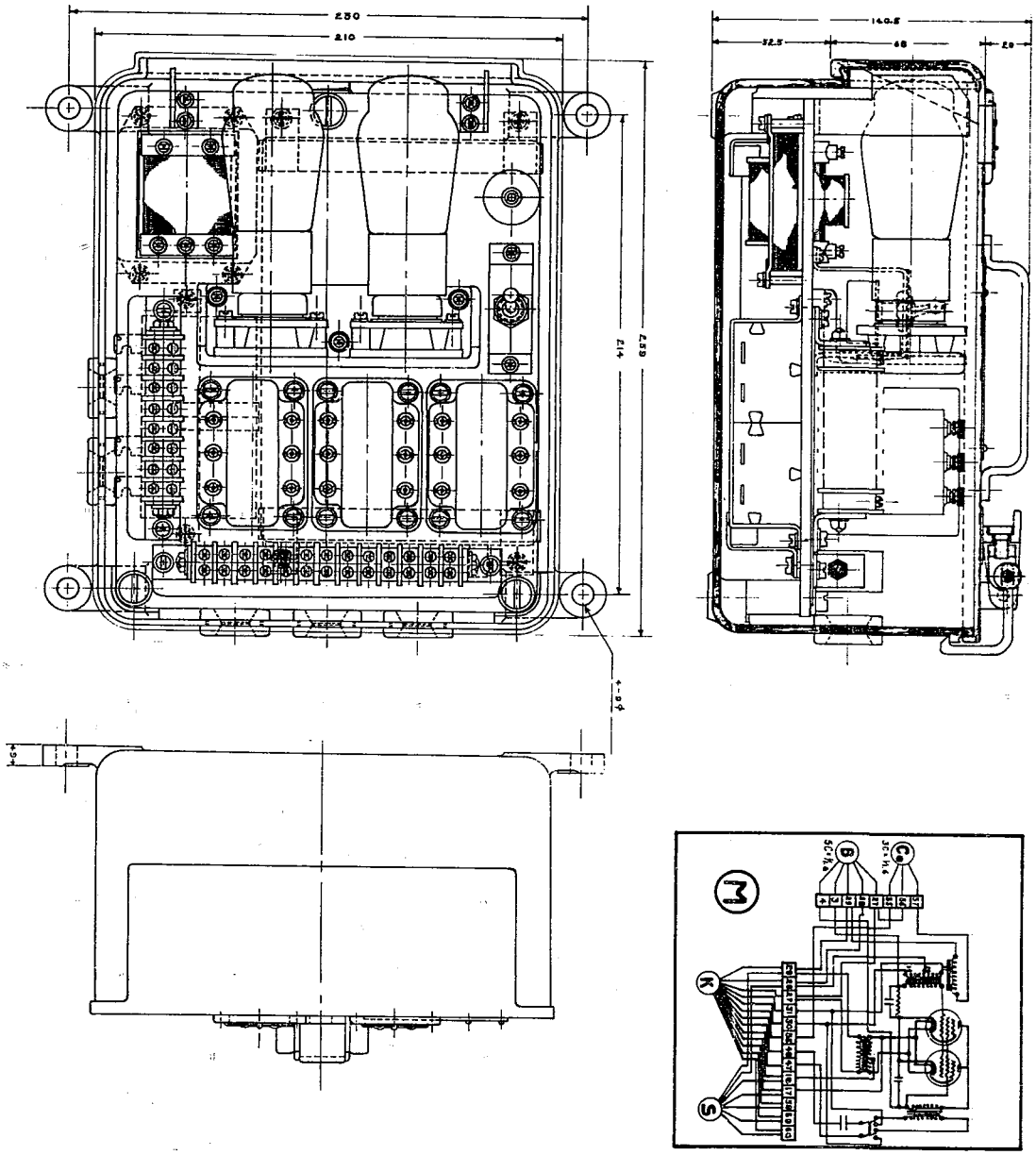

Figure 241
ANSCHUTZ TYPE COMPASS - AMPLIFIER

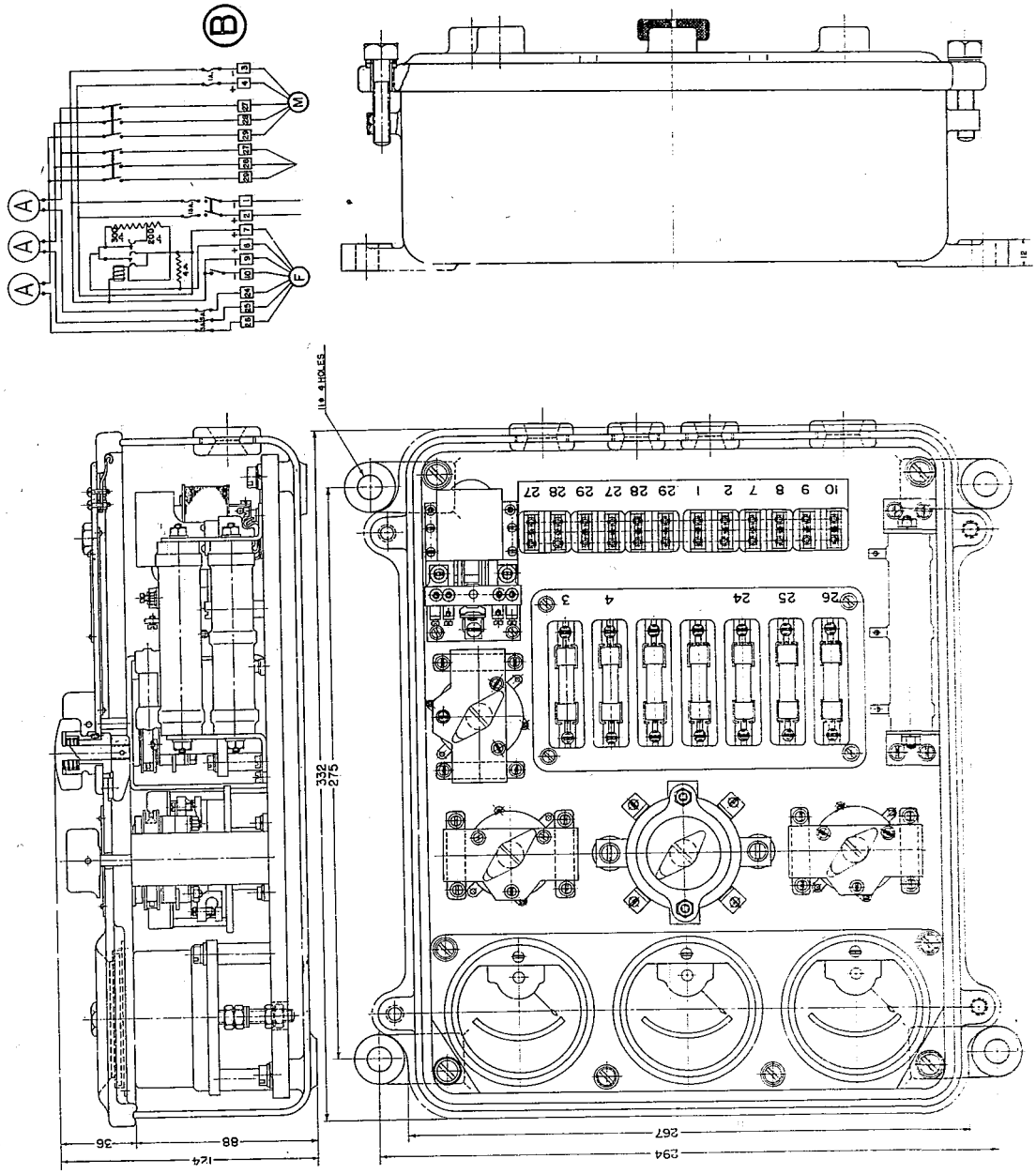

Figure 242
ANSCHUTZ TYPE COMPASS - POWER JUNCTION BOX

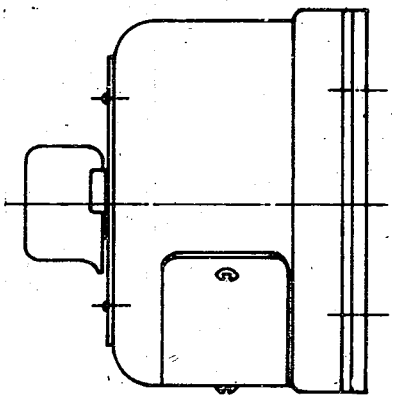

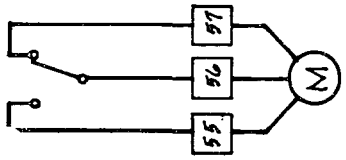

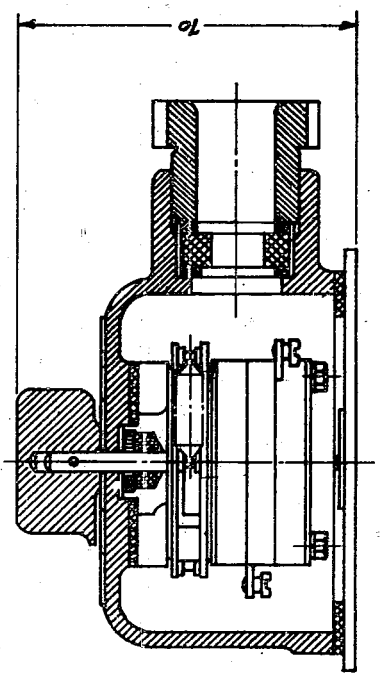

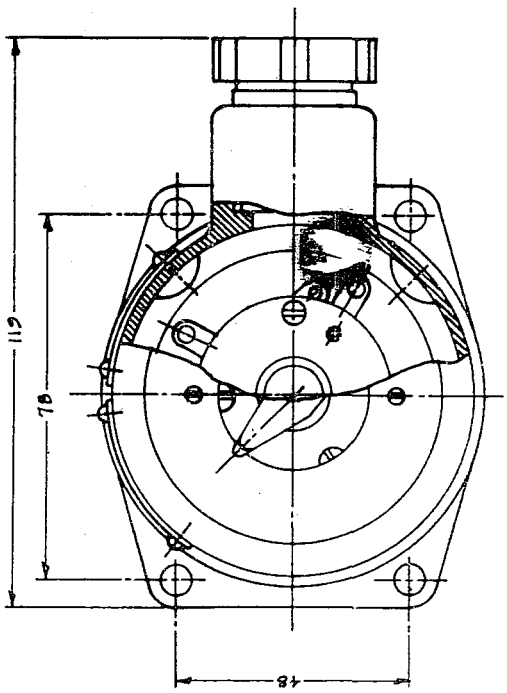

Figure 243
ANSCHUTZ TYPE COMPASS - OSCILLATION CONTROL SWITCH

The design and materials used in the equipments was commercial in every respect. .The sound system for the projectors was of very old design and quite inferior to 35mm motion picture equipment used by the U. S. Navy.

a. Portable Motion Picture Equipment

The portable motion picture equipment stows in five carrying cases. The major components of the equipment are as follows:

Quantity	Description	Size of Case	Weight
2	Projectors	26 x 54 x 74cm	15 kg each
1	Amplifier	24 x 44 x 30cm	20 kg
1	Loudspeaker	26 x 54 x 53cm	25 kg
1	Accessories	31 x 41 x 39cm	

The projector equipment, stowed in carrying cases, is shown in Figure 244a.

The projector, less soundhead, is a copy of Devry (American) Type E (Figure 244b).

The soundhead contains a stationary sound gate and a constant speed sprocket which is directly driven by a chain and sprocket. The only filtering in the sound system consists of a flywheel also mounted on the constant speed sprocket shaft. No attempt has been made to measure the "wow" or flutter content of the above sound system other than by stroboscope.

The projector utilizes a 500 watt, 100 volt projection lamp and a 5 amp, 10 volt exciter lamp which operates from raw A.C. The components of the projector were assembled on the wooden back panel of the case.

The amplifier utilizes the circuit shown in Figure 244c. It is rated at 12 watts (which is very high for a pair of 2A3 tubes), has a gain of 120 db, operates from a 95-110 volt, 50-60 cycle power source and draws 120 watts.

Projector changeover is accomplished by a simple snap switch. The amplifier, ready for operation (less cables) is shown in Figure 244d.

The loudspeaker unit contains a 12-inch cone type speaker mechanism. The cone is of felted construction with no apparent protection against moisture.

One type of speaker unit is shown in Figure 244f and the second type is shown in Figure 244g.

The monitor loudspeaker (Figure 244e) is a cone type unit with volume control which is patched across the output of the main amplifier.

The above described equipment is inferior in design and construction to equipment currently in use in U. S. vessels. A standard sound test film was not available for checking the performance of the equipment. A reel of Japanese film was run. The sound quality was poor.

b. Semi-Portable Motion Picture Equipment

This equipment can be packed in eight carrying cases as shown in Figure 245c.

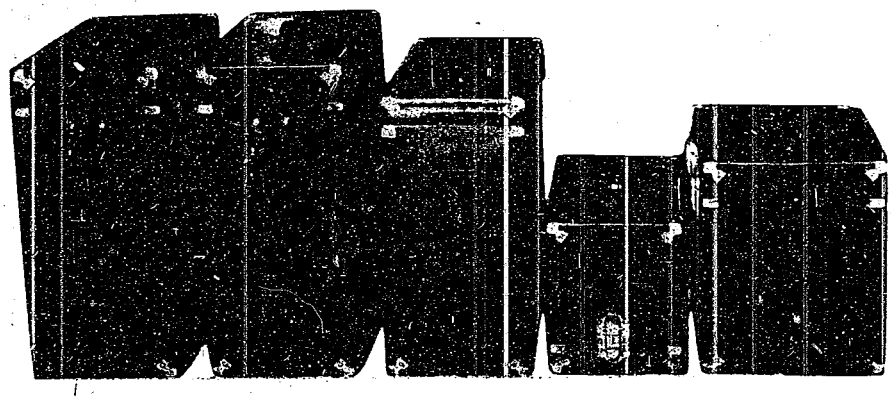

Figure 244a
PORTABLE MOTION PICTURE EQUIPMENT
CARRYING CASES

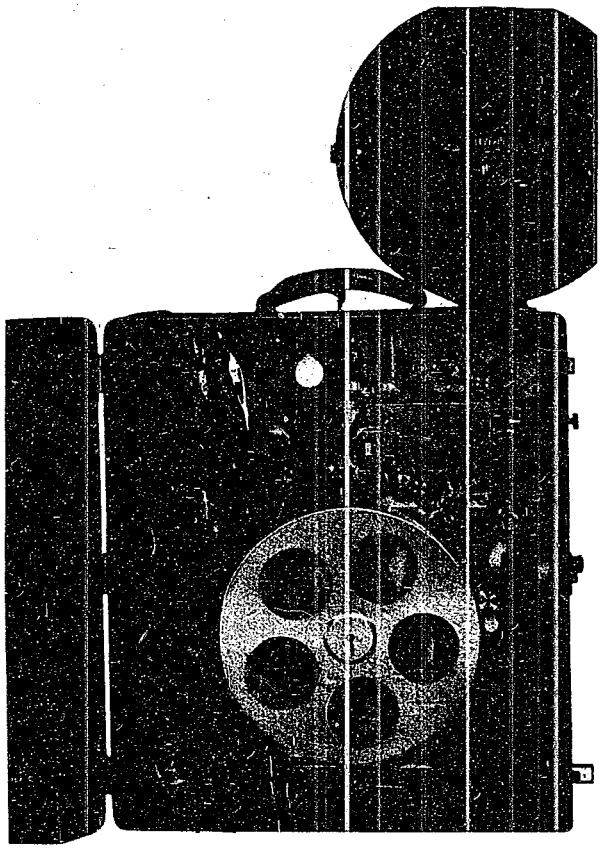

Figure 244b
PORTABLE MOTION PICTURE EQUIPMENT
PROJECTOR

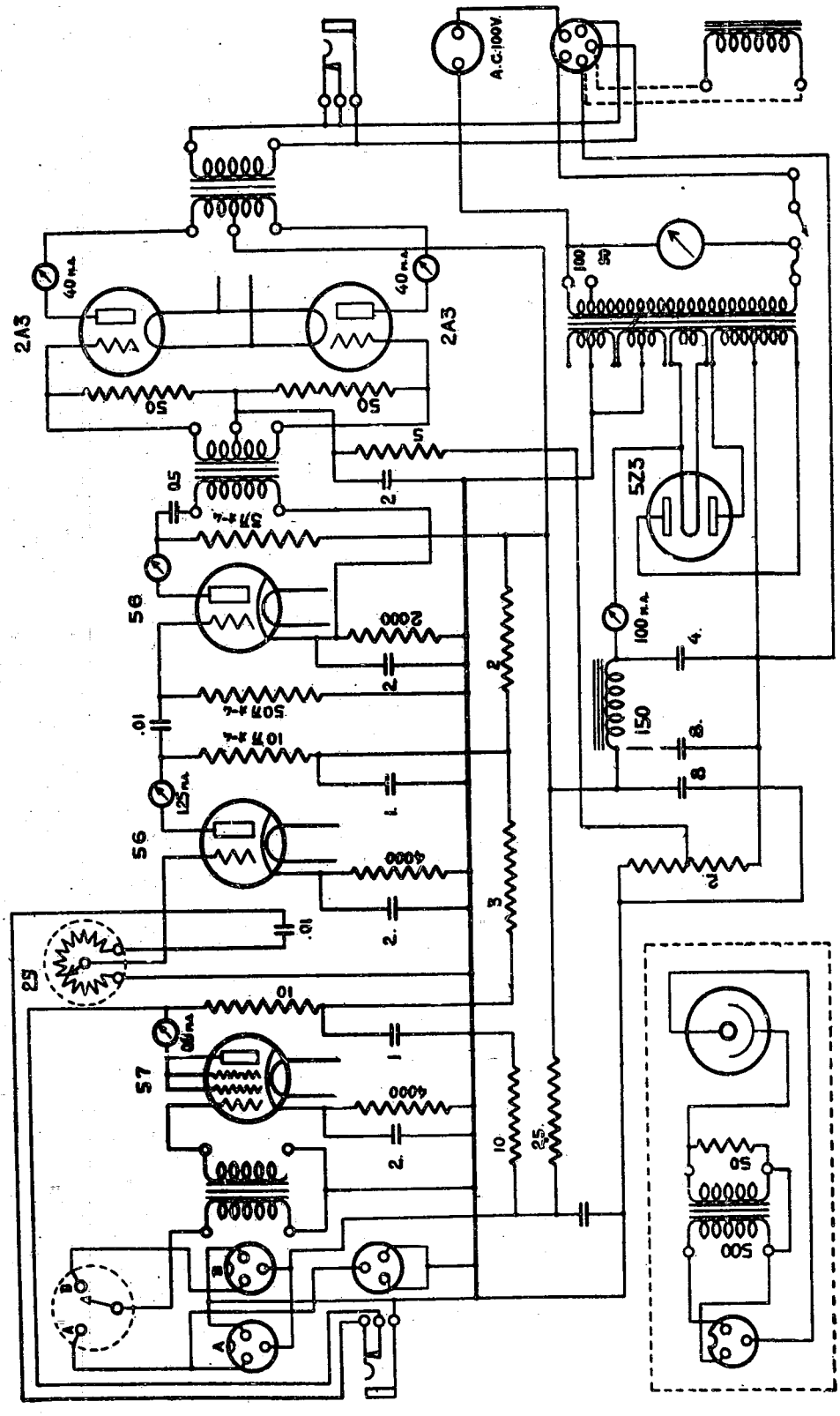

Figure 244c
PORTABLE AND SEMI-PORTABLE MOTION PICTURE EQUIPMENT - AMPLIFIER SCHEMATIC

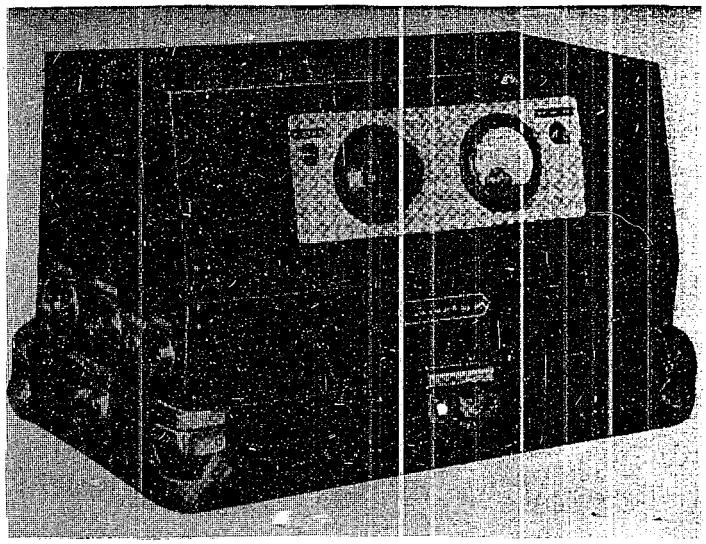

Figure 244d
PORTABLE AND SEMI-PORTABLE MOTION PICTURE EQUIPMENT - AMPLIFIER

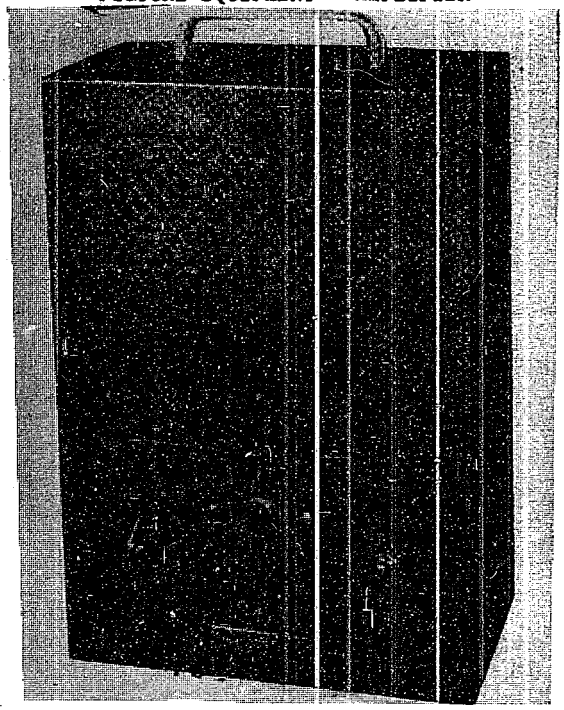

Figure 244e
PORTABLE AND SEMI-PORTABLE MOTION PICTURE EQUIPMENT - MONITOR SPEAKER

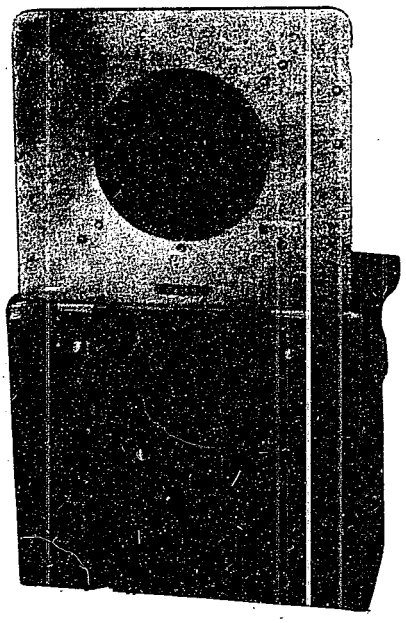

Figure 244f
PORTABLE AND SEMI-PORTABLE MOTION PICTURE EQUIPMENT - LOUD-SPEAKER (TYPE 1)

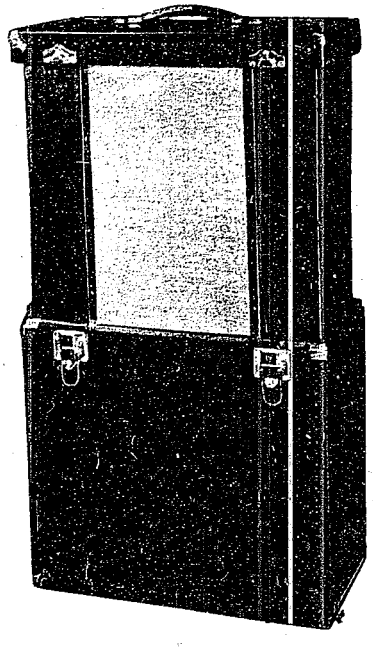

Figure 244g
PORTABLE AND SEMI-PORTABLE MOTION PICTURE EQUIPMENT - LOUD-SPEAKER (TYPE 2)

The major components of the equipment are as follows:

Quantity	Description	Size of Case	Weight
2	Projectors	31 x 64 x 53cm	46 kg
2	Stands	33 x 64 x 38cm	25 kg
1	Amplifier	24 x 44 x 30cm	20 kg
1	Loudspeaker	26 x 54 x 53cm	25 kg
1	Monitor	23 x 41 x 39cm	7.5 kg
1	Accessories	31 x 41 x 39cm	--

The projector for this equipment is shown in Figure 245b. The projector and soundhead are of Japanese design and manufacture.

The intermittent is of the Geneva type.

The sound system is illustrated in Figures 245c and 245d. The sound take-off is from a stationary gate. The constant speed sprocket shaft carries a flywheel. The shaft is driven through three springs arranged in triangular formation. This drive is similar to the filter system used in the first U. S. Navy soundheads in 1930. The slit width is one mil.

The projector is adaptable for use with either incandescent lamp (1000 watts or 1500 watts) or arc.

The amplifier and loudspeakers are the same as for portable equipment.

The film for Japanese Navy entertainment was obtained from commercial film sources. The Japanese facilities for producing sound films were very old and obsolete by U. S. standards.

Personnel in the Technical Department of the Japanese Navy Ministry advised, prior to the actual inspection of the Japanese equipment, that it was much inferior to American equipment. This was borne out by the examination which followed.

The largest and best Japanese theaters use motion picture equipment of American manufacture.

11. Sound Recording Equipment

This equipment was interpreted to be sound recording gear such as wire recorders, disc recorders and film recorders. Recorders such as are used with underwater sound and fathometer equipment were not considered within the scope of this study.

There was no sound recording equipment in use in the Japanese Navy. The personnel interrogated had no knowledge of proposed or prospective developments of this equipment.

The Japanese Army had some wire recording equipment of large size not for shipboard use. This equipment has been collected by the U. S. Army.

12. Electrical Character Transmission System

The Japanese Navy had no form of character transmission system such as teletype or facsimile on shipboard. Personnel interrogated stated that on carriers aviators in ready rooms were provided with information by one of the following means:

a. Voice tube and oral.

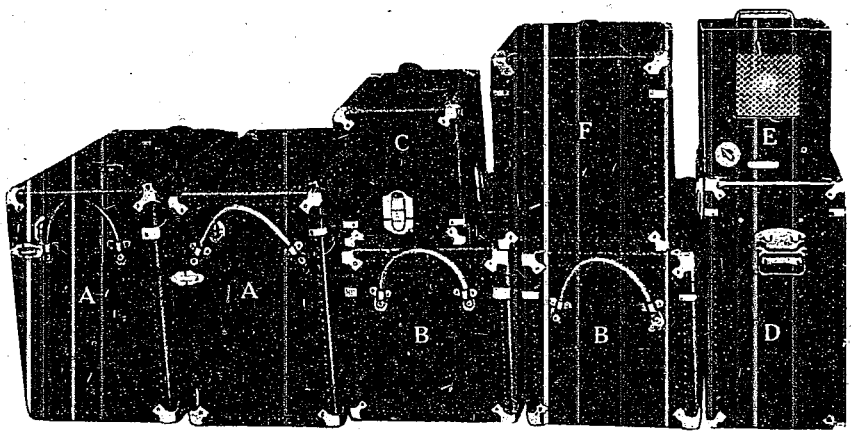

Figure 245a
SEMI-PORTABLE MOTION PICTURE EQUIPMENT - CARRYING CASES

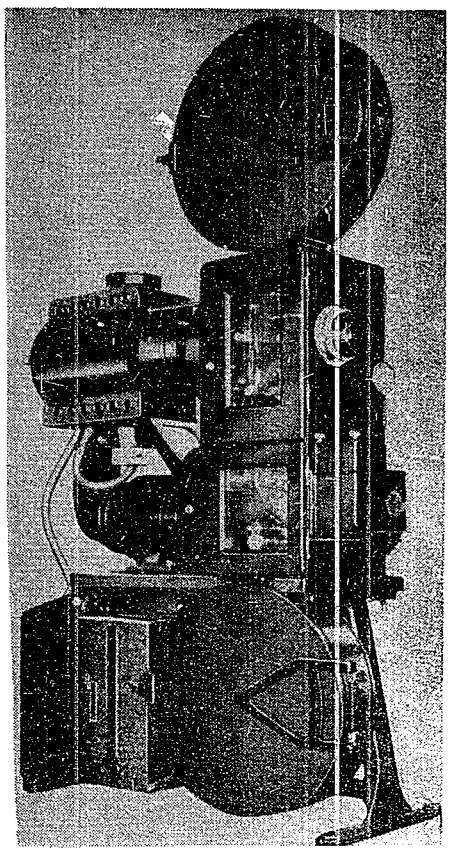

Figure 245b
SEMI-PORTABLE MOTION PICTURE EQUIPMENT - PROJECTOR

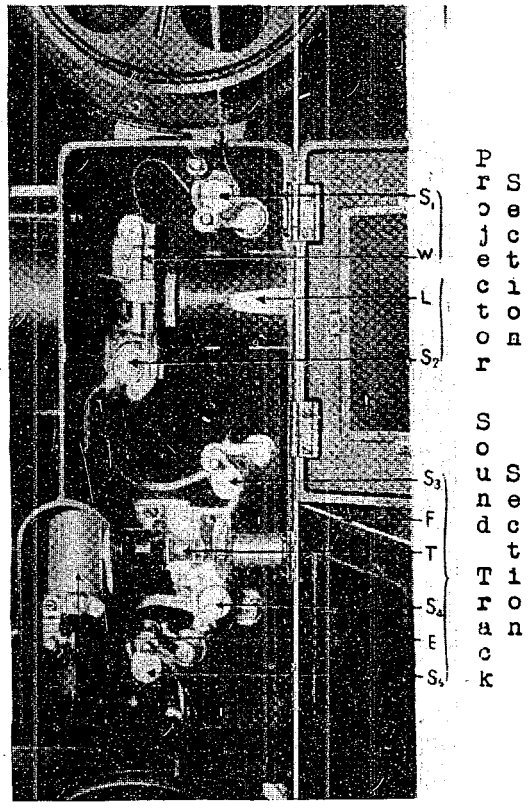

Figure 245c
SEMI-PORTABLE MOTION PICTURE EQUIPMENT

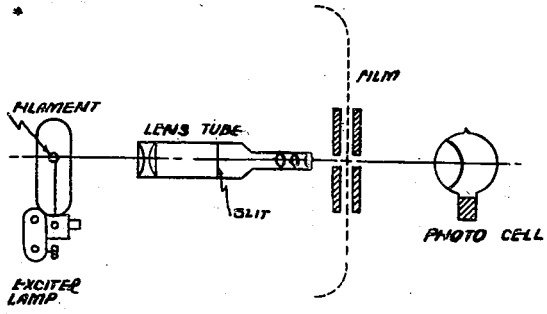

Figure 245d
SEMI-PORTABLE MOTION PICTURE EQUIPMENT - SOUND PICKUP DIAGRAM

b. Telephone and oral.

c. General defense (announcing) system.

d. Teletalk system.

e. Pneumatic tubes.

There was no means, other than messenger, of sending a typed, written or sketched message from the bridge, fly control or any other point on the ship to the aviator's ready room. There was no means of projecting a message in the ready rooms.

Information was received via voice tube or telephone and repeated orally for the aviators or it was heard over one of the two types of announcing systems noted above.

Whereas the above pertains specifically to character transmission between command or control points on the ship and the aviator's ready rooms, it applies as well to communication between all points on all types of Japanese naval vessels.

Teletype, of a standard commercial type, using the Japanese "KATAKANA" (phonetic) alphabet was used between shore stations. This equipment was described as being identical to American commercial equipment in principle of operation but used 51 characters.

The 16 character military teletype system referred to in the GHQ, SCAP report listed under "References" of this report was mentioned in the interrogations. The Japanese Navy had none of this equipment and the personnel interrogated had no knowledge of it.

The lack of character transmission systems in the Japanese Navy is verified by GHQ, USAFP, "Report on Scientific Intelligence Survey in Japan, September and October 1945". Volume 1, dated November 1945, page 28 (b), Teletypewriters.

ENCLOSURE (A)

LIST OF EQUIPMENT FORWARDED TO NAVAL ORDNANCE INVESTIGATION LABORATORY, INDIANHEAD, MD.

NavTechJap Equipment No.	ITEM
JE22-1055/1056	Engine Revolution Change Order Transmitter and Receiver
B	Shaft Revolution Transmitter and Receiver.
1057D	Bell, Buzzer and Horn of Each Type Used on Japanese vessels.
1058E	Gasoline, Vapor Detector with Instruction Book
1059F	Salinometer - Indicator, Transmitter, & power Unit.
1060	440 volt AC Draw-out Type Circuit Breaker
2018	100 volt DC Generator Control Panel
2020	Miscellaneous Samples of Armored Cable
2021	Shipboard Lighting Fuze and Junction Box (4 units).
2026	Steering Control Units
2036	200 volt DC Distribution Circuit Breaker.
2039	Fluorescent Fixture
2042	Generator Control Panel, AC.
2043	Generator Distribution Panel, AC.
2050/a	Speed and Distance Transmitter - Type 92 Log
2050/b	Amplifier - Type 92 Log
2050/c	Resistance Box - Type 92 Log
2050/d	Starter for M.G. - Type 92 Log
2050/e	Branch Compensator Box
2050/f	Junction Box for Distance Indicators - Type 92 Log
2050/g	Condenser - Type 92 Log
2050/h	Motor Generator - Type 92 Log
2050/i	Speed Indicator - Type 92 Log
2050/j	Distance Indicator - Type 92 Log
2050/k	Distance Indicator - Type 92 Log
2050/l	Relay Box - Type 92 Log
2050/m	Switch Box for Selsyns - Type 92 Log
2050/n	Cable - Amplifier to Impellor - Type 92 Log
2050/o	Seacock - Type 92 Log
2050/p	Impellor Tube - Type 92 Log
2050/q	Box of Spares (partial) - Type 92 Log
2051/a	Switch for 50 v 50 cycles - Type 98 Log
2051/b	Fuse Box - Type 98 Log
2051/c	Pressure Receiver Box - Type 98 Log
2051/d	Speed Distance Transmitter - Type 98 Log
2051/e	Speed Indicator Distribution Box - Type 98 Log
2051/f	Distance Indicator Distribution Box - Type 98 Log
2051/g	Condenser Box - Type 98 Log
2051/h	Distance Indicator - Type 98 Log
2051/i	Distance Indicator - (Vaeder Type) - Type 98 Log
2051/j	Speed Indicator - Type 98 Log
2051/k	Resistance Box - Type 98 Log
2051/l	Petot Tube - Type 98 Log
2052/a	Wind Intensity Transmitter
2052/c	Wind Intensity Indicator
2052/d	Wind Direction Transmitter
2052/e	Wind Direction Indicator
2053	Hand Lantern
2054/a	Teletalk Speaker Unit (Weather Deck Type)
2054/b	Teletalk Selector Box
2054/c	Teletalk Amplifier
2054/d	Teletalk Rotary Selector Switch
2054/e	Teletalk Speaker (Indoor Type)

ENCLOSURE (A), continued

NavTechJap Equipment No.	ITEM
JE22-2055A	Eng. Order Telegraph - Transmitter
2055B	Eng. Order Telegraph - Receiver
2056A	Battery Telephone - Table Model
2056E	Battery Telephone - Handset
2057A	Fluorescent Fixture Including Shock Mounting, 230 volt.
2057B	Shock Mounted Steam Tight Fixtures
2057C	Magazine Fixture
2058	Rudder Angle Indicator - Receiver
2059	Damage Control Telegraph - Receiver
2060A	Steering Order Telegraph - Transmitter
2060B	Steering Order Telegraph - Receiver
JE50-1282A	Sound Powered Telephone - Handset and Ringer
1282B	Sound Powered Telephone - Handset and Ringer
1283A	Sound Powered Telephone - Molded Rubber Handset
1284	Sound Powered Telephone - Portable Set
1285	Sound Powered Telephone - Portable Set
1286	Microphone
1287	Type 2 Reproducer
1288	Type 2 Mod. 1 Reproducer
1289	Type 3 Reproducer
1395	Bitumastic Material Used in Community Stuffing Boxes
1396	Rotating Cable Supports and Casting Upon Which They Rotate From 10 Cm. Turret.
1397	Lighting Door Switch

ENCLOSURE (B)

LIST OF DOCUMENTS FORWARDED TO WASHINGTON, D.C.

The electrical plans listed hereinafter have been forwarded to the Washington Document Center, packaged according to type of ship. Each package was marked with an ATIS number and the NavTechJap document number of the first plan in the package. It was requested that WDC handle these documents as batched, therefore the NavTechJap and ATIS document numbers of the bundle in which it is located will identify the document at WDC. The numbers in parentheses after the title are NavTechJap document numbers previously affixed to the documents and are included only for convenience in locating an individual blueprint in the bundles.

* * * * *

PACKAGE TITLE: BLUEPRINTS: ELECTRICAL PLANS, BB-YAMATO CLASS

NavTechJap Document No: ND22-2201

ATIS No: 4525

BB-YAMATO Ring main and power distribution. (ND22-2201).

BB-MUSASHI Layout diagram, 20V D.C. power supply. (ND22-2801).

Wiring diagram, D.C. switchboard for 20V commercial use. (ND22-2802).

Secondary power source equipment - 50V AC power source circuit layout diagram. (ND22-2803).

50 - 220V AC power source power supply layout diagram. (ND22-2804).

AC 230V-50V switchboard wiring diagram (Fwd. and Aft). (ND22-2806).

BB-YAMATO Storage battery room (for steering engine) installation diagram. (ND22-2807).

BB-MUSASHI Primary power source equipment circuit layout diagram. (ND22-2808).

Loud-speaker telephone equipment non-battery telephone circuit layout. (ND22-2809).

Loud-speaker telephone system general exchange telephone circuit layout diagram No. 5. (ND22-2810).

Loud-speaker telephone equipt direct telephone circuit diagram (Navig section). (ND22-2811).

Lookout control comm equipt revolution angle and alarm comm circuit diagram (surface lookout). (ND22-2812).

Loud-speaker system circuit diagram, mk 11 loud-speaker model 1 (AA control officer orders). (ND22-2813).

ENCLOSURE (B), continued

BB-MUSASHI Loud-speaker telephone equipt defense control direct telephone circuit diagram (electrical section). (ND22-2814).

Loud-speaker telephone equipt protection control direct telephone circuit diagram (flooding and draining section). (ND22-2815).

Comm circuit diagram for installation of D equipt mk. 11 model 2 modif.2. (ND22-2816).

Loud-speaker telephone equipt direct telephone circuit diagram (comm control). (ND22-2817).

Disposition diagram, after wiring room distribution board. (ND22-2818).

After wiring room distribution board wiring diagram, part 2. (ND22-2819).

After wiring room distribution board diagram, part 1. (ND22-2820).

Forward wiring room distribution board wiring diagram, part 7. (ND22-2821).

Forward wiring room distribution board wiring diagram, part 6. (ND22-2822).

Forward wiring room distribution board wiring diagram, part 5. (ND22-2823).

Forward wiring room distribution board wiring diagram, part 4. (ND22-2824).

Forward wiring room distribution board wiring diagram, part 3. (ND22-2825).

Forward wiring room distribution board wiring diagram, part 2. (ND22-2827).

Forward wiring room distribution board wiring diagram, part 1. (ND22-2828)

Forward bridge lower wiring room distribution board wiring diagram. (ND22-2829)

Forward bridge upper wiring room distribution board wiring diagram. (ND22-2830).

Forward wiring room distributing board layout diagram, part 1. (ND22-2831).

Forward bridge lower wiring room distributing board layout diagram. (ND22-2832).

Forward bridge upper wiring room distributing board layout diagram. (ND22-2833).

AA gun turret lead-in cable connection diagram. (ND22-2834).

Forward special type range finder lead-inwire and junction box wiring diagram. (ND22-2835).

ENCLOSURE (B), continued

BB-MUSASHI Secondary gun turret lead-in cable connection diagram. (ND22-2836)

Ordnance disposition diagram, No. 3 Main gun circuit commutation room. (ND22-2837).

Ordnance disposition diagram, No. 1 Main gun circuit commutation room. (ND22-2838).

Circuit layout diagram, multic-cored communication wires (related to AA guns and extra MG's). (ND22-2839).

Circuit diagram, multi-cored lead-covered armored communication wires (interior of M turret and general fwd. use). (ND22-2840).

Circuit diagram, multi-cored lead-covered armored communication wires (boiler room, engine room, general aft use). (ND22-2841).

Circuit layout diagram, multi-cored lead-covered armored communication wires (fore and main masts). (ND22-2842).

Special circuit diagram radio power source: hydrophone power source. (ND22-2843).

Special circuit diagram gyro-compass and roll chronometer power source. (ND22-2844).

Circuit diagram, mk 11 model 1 loud-speaker telephone. (ND22-2845).

Circuit diagram, mk 1 loud-speaker telephone - model. (ND22-2846).

20V DC power source circuit layout diagram - Secondary power source equipment. (ND22-2847).

Call bell equipment circuit layout diagram. (ND22-2848).

Call bell equipment layout attachments. (ND22-2849).

Circuit layout diagram. Loud-speaker order transmitter - Portable use model 2 - mod. 1. (ND22-2850).

Circuit layout diagram. Light oil tank air space, refreigerator, electric thermometer equipment. (ND22-2851).

Circuit layout diagram. Switchboard for test use and small type storage battery charging equipment. (ND22-2852).

Communications section control equipment. Air transmitter electric bell circuit layout diagram. (ND22-2853).

Engine control communications equipment. Air transmitter electric bell circuit layout diagram. (ND22-2854).

Emergency control communications equipment. Air Transmitter and speaking tube electric bell circuit layout diagram. (ND22-2855).

Aircraft catapult control communications equipment. Direct telephone and air transmitter bell circuit layout diagram. (ND22-2856).

Speaking tube electric bell and air transmitter bell circuit layout diagram. (Navigation section and generally). (ND22-2857).

ENCLOSURE (B), continued

BB-MUSASHI Engine control communication equipment. Speaking tube electric bell circuit layout diagram. (Electrical control). (ND22-2858).

Engine control communications equipment. Speaking tube electric bell circuit layout diagram. (Engine control). (ND22-2859).

Communications section control equipment. Speaking tube electric bell circuit layout diagram. (ND22-2860).

Searchlight control communication equipment. Speaking tube electric bell circuit layout diagram. (ND22-2861).

Speaking tube electric bell circuit layout diagram. (AA fire control officer orders and AA gun control). (ND22-2862).

Secondary guns gun battle control communications equipment. Speaking tube electric bell circuit layout diagram. (ND22-2863).

Main guns gun battle control communications equipment. Speaking tube electric bell circuit layout diagram. (ND22-2864).

General exchange loud-speaker telephone circuit layout diagram. (Nos. 1 to 7 inclusive). (ND22-2865 to 2871).

Emergency control communications equipment. Direct loud-speaker telephone circuit layout diagram. (Nos. 1 and 2) (ND22-2872 and 2873).

Engine control communication equipment. Direct loud-speaker telephone circuit layout diagram. (Electrical section control). (ND22-2874).

Engine control communications equipment. Direct loud-speaker telephone circuit layout diagram. (Aux. machinery section control). (ND227-2875).

Engine control communication equipment. Direct loud-speaker telephone circuit layout diagram. (Boiler section control). (ND22-2876).

Same as above. (Engine section control). (ND22-2877).

Same as above. (Engine Control). (ND22-2878).

Communication section control equipment. Direct loud-speaker telephone circuit layout diagram. (ND22-2879).

Direct loud-speaker telephone circuit layout diagram. (Navigation department and generally). (ND22-2880).

Lookout control communication equipment. Direct loud-speaker telephone circuit layout diagram. (ND22-2881).

Secondary guns gun battle control communication equipment. Direct loud-speaker telephone circuit layout diagram. (Control station dispatch.) (ND22-2882).

Same as above for main guns. (ND22-2883).

ENCLOSURE (B), continued

BB-MUSASHI Emergency control communication equipment. Flooding and blowing orders circuit layout diagram. (ND22-2884).

Emergency control communication equipment. Order communication circuit layout diagram. (ND22-2885).

Generator room and hydraulic pump room. Salinometer equipment circuit layout diagram. (ND22-2886).

Engine room electric thermometer and salimeter equipment circuit layout diagram. (ND22-2887).

Engine control communication equipment - HP Signal communication circuit layout diagram. (ND22-2888).

Engine control communication equipment. Cruising turbine pull out order circuit layout diagram. (ND22-2889).

Engine control communication equipment. Voltage type speedometer circuit layout diagram. (ND22-2890).

Engine control communication equipment. Alarm circuit layout diagram. (ND22-2891).

Engine control communication equipment. Engine room reply bell circuit layout diagram. (ND22-2892).

Engine control communication equipment. Revolving communication circuit layout diagram. (ND22-2893).

Engine control communication equipment. Smoke screen communication circuit layout diagram. (ND22-2894).

Engine control communication equipment. Smoke signal circuit layout diagram. (ND22-2895).

Engine control communication equipment. Fire order communication circuit layout diagram. (ND22-2896).

Engine control communication equipment. Engine room speed communications circuit layout diagram. (ND22-2897).

Navigation section control communications equipment. Life buoy communications circuit layout diagram. (ND22-2898).

Navigation section control communications equipment. Emergency steering and steering communication circuit layout diagram. (ND22-2899).

Navigation section control communications equipment. Rudder angle communications circuit layout diagram. (ND22-2900).

Lookout control communications equipment. Revolution angle, alarm communications circuit layout diagram. (Sea lookout). (ND22-2901).

Lookout control communication equipment. Elevation, revolution angle communications circuit layout diagram. (Sky lookout). (ND22-2902).

ENCLOSURE (B), continued

BB-MUSASHI Emergency control communication equipment. Flooding and blowing orders circuit layout diagram. (ND22-2884).

Emergency control communication equipment. Order communication circuit layout diagram. (ND22-2885).

Generator room and hydraulic pump room. Salinometer equipment circuit layout diagram. (ND22-2886).

Engine room electric thermometer and salimeter equipment circuit layout diagram. (ND22-2887).

Engine control communication equipment - HP Signal communication circuit layout diagram. (ND22-2888).

Engine control communication equipment. Cruising turbine pull out order circuit layout diagram. (ND22-2889).

Engine control communication equipment. Voltage type speedometer circuit layout diagram. (ND22-2890).

Engine control communication equipment. Alarm circuit layout diagram. (ND22-2891).

Engine control communication equipment. Engine room reply bell circuit layout diagram. (ND22-2892).

Engine control communication equipment. Revolving communication circuit layout diagram. (ND22-2893).

Engine control communication equipment. Smoke screen communication circuit layout diagram. (ND22-2894).

Engine control communication equipment. Smoke signal circuit layout diagram. (ND22-2895).

Engine control communication equipment. Fire order communication circuit layout diagram. (ND22-2896).

Engine control communication equipment. Engine room speed communications circuit layout diagram. (ND22-2897).

Navigation section control communications equipment. Life buoy communications circuit layout diagram. (ND22-2898).

Navigation section control communications equipment. Emergency steering and steering communication circuit layout diagram. (ND22-2899).

Navigation section control communications equipment. Rudder angle communications circuit layout diagram. (ND22-2900).

Lookout control communications equipment. Revolution angle, alarm communications circuit layout diagram. (Sea lookout). (ND22-2901).

Lookout control communication equipment. Elevation, revolution angle communications circuit layout diagram. (Sky lookout). (ND22-2902).

ENCLOSURE (B), continued

BB-MUSASHI Searchlight control communication equipment. Push-to-talk orders and drill orders circuit layout diagram. (ND22-2903).

Airplane catapult control communication equipment. Emergency catapult communication circuit layout diagram. (ND22-2904).

Airplane catapult control communication equipment. Order, maintenence and revolutions angle communications circuit layout diagram. (ND22-2905).

Secondary guns gun battle control communication equipment. Circuit commutation order commutation circuit layout diagram.

Various meter illumination lights. Circuit layout diagram. (ND22-2907).

Circuit layout diagram. Dressing ship lights equipment. (ND22-2908).

Special circuit layout diagram. No-load voltage indicator for steering electric motor. (ND22-2909).

Special circuit layout diagram. Portable x-ray equipment. Dentist unit sun lamp. (ND22-2910).

Degaussing circuit equipment. Power supply layout diagram. (ND22-2911).

Electric motor for 25mm MG stand revolution. Power circuit layout diagram accompanying AA ordnance equipment. (ND22-2912).

Power circuit layout diagram accompanying increased installation of MG's. (MG stand revolution electric motor). (ND22-2913).

BB-YAMATO Power circuit layout diagram. (1) 25mm MG firing equipment power source. (2) Gun firing equipment power source. (3) Electric motor used in gun battles (4) 25mm MG stand revolution. (5) AA MG revolution. (6) Electric motor for range-finder turret revolution. (ND22-2914).

Power circuit layout diagram (Aft section). Electric motors for: (1) 12.7cm AA gun elevation and revolution. (2) 12.7cm AA horizontal carriage ammo. and cordite hoist. (3) 12.7cm AA gun ammo. horizontal carriage. (4) 25mm MG ammo. and cordite hoist. (ND22-2915).

Power circuit layout diagram. (forward section). Electric motors for: (1) 12.7 cm. AA gun elevation and revolution (2) 12.7 AA gun shell and cordite hoist. (3) 25mm MG ammo. and cordite hoist. (4) 13mm MG ammo. and cordite hoist. (ND22-2916)

Power circuit layout diagram. Main gun turret auxiliary revolution and secondary gun turrets power use. (ND22-2917).

BB-MUSASHI Essentials diagram of armature for diesel and turbine generator. (ND22-2918).

Engine side control board wiring diagrams. No. 5 #1 and 2 actual wirings. (ND22-2919).

ENCLOSURE (B), continued

BB-MUSASHI Same as above - 6 # 3 and 4 actual wiring. (ND22-2920).

Engine side control board wiring diagrams. No. 7 - # 5 and 6 actual wiring. (ND22-2921).

Same as above - No. 8 - # 7 and 8 actual wiring. (ND22-2922).

5, 6, 7 and 8 engine side control boards. Push-button disposition diagram. (ND22-2923).

1, 3, 2, and 4 engine side control boards. Push-button disposition diagram. (ND22-2924).

Main control board. Push-botton disposition diagram. (ND22-2925).

BB-YAMATO Main guns, secondary guns and AA guns. Storage battery charging circuit layout diagram. (ND22-2926).

BB-MUSASHI Aux. control board wiring diagram. Actual wiring. (ND22-2927).

Main control board wiring diagram. Actual wiring. (ND22-2928).

No. 1 wiring diagram for (1) type 96 - 150cm searchlight model 1. (2) type 96 searchlight controller model 2 A. DC 220V. AC 220V. Attached to turret covering. (3) selector equipment for type 96 searchlight. (ND22-2929).

No. 2 wiring diagram for above. (ND22-2930).

No. 3 wiring diagram for above. (ND22-2931).

* * * * *

PACKAGE TITLE: FIRE AND HEAT PROOF CABLE SPECIFICATIONS

NavTechJap Document No: ND22-2012

ATIS No: 4526

* * * * *

PACKAGE TITLE: WIRE AND CABLE SPECIFICATIONS

NavTechJap Document No: ND22-2011

ATIS No: 4527

* * * * *

ENCLOSURE (B), continued

PACKAGE TITLE: BLUEPRINTS AND TRACINGS: ELECTRICAL PLANS, CV-UNRYU CLASS

NavTechJap Document No: ND22-6032

ATIS No: 4528

CV-UNRYU Engine control gear. Voltage tachometer. Chart of electric circuit system. (ND22-6032).

Voice tube electric bell gear. Chart of system of electric circuits for defensive orders. (E calls). (ND22-6033).

Voice tube electric bell equipment. Navigation dept. electric system. (E calls). (ND22-6034).

Voice tube electric bell equipment. Electric system for communication commands. (E calls). (ND22-6035).

Plane control circuit. Voice tube electric bell equipment. (E calls). (ND22-6036).

Electric bell equipment for pneumatic message transmission. Electric circuits for communication and engine control. (E calls). (ND22-6037).

Call bell equipment electrical system. (E calls). (ND22-6038).

Voice tube electric bell equipment. Electric system for engine control. (E calls). (ND22-6039).

Special electric system. Type 3, Mark 2 Log modification 2. Electric system. (ND22-6040).

Magazine. Chart of electric circuit system for electric thermometer. (ND22-6041).

Magazine. Chart of electric circuit system for electric warning thermometer. (ND22-6042).

Special electric equipment. Type 91 modification 2 anemoscope electrical system. (ND22-6043).

Special electric circuit equipment. Engine room and salinometer electric system. (ND22-6044).

Communication system for control of engines. Smoke screen. Electric system of communication. (ND22-6045).

Control equipment for directing engines. Electric system of communication for indicating smoke. (ND22-6046).

Defense control signal equipment. Flooding command signal electric system. (ND22-6047).

Engine control signal equipment. Electric circuits for hot smoke cooler pump, buzzer announcements. (ND22-6048).

Engine control signal equipment fire drill signal electrical system. (ND22-6049).

ENCLOSURE (B), continued

CV-UNRYU

Communication gear for engine control. Chart of electric circuit system used to notify when cruising turbines are to be cut in and out. (ND22-6050).

Navigation dept. communication equipment. Electric communication system for emergency steering. (ND22-6051).

Navigation dept. communication gear. Chart of electric circuits for rudder angle communication. (ND22-6052).

Navigation section communication gear. Chart of electric circuit system for steering. (ND22-6053).

Communication equipment for engine control. Secondary speed communication circuit system. (ND22-6054).

Communication equipment for engine control. Engine room speed. Electric communication system. (ND22-6055).

Engine control signal equipment. Mechanical engine order bell system. (ND22-6056).

Engine control equipment. Horsepower signal lamp electric system. (ND22-6057).

Amplifying gear. Chart of system of electric circuits for direct communication of defense orders. (ND22-6058).

Amplifier - telephone equipment. General switchboard electrical system. (ND22-6059).

Chart of electric system for direct transmission of defense orders. (Telephone). (ND22-6060).

Amplifier telephone equipment electric system. General switchboard system. (ND22-6061).

Amplifier telephone system. Chart of electric system for direct transmission of orders to airplanes. (ND22-6062).

Amplifier telephone equipment. Gun fire control. Direct communication electric system. (AA Fire direction). (ND22-6063).

Amplifier telephone equipment. Gun fire control. Direct signal system (DD gun control). (ND22-6064).

Amplifying telephone equipment. Searchlight and lookout direction. Electric system for direct reporting. (ND22-6065).

Amplifier gear. Chart of direct communication system for gun battery control (MG control). (ND22-6066).

Amplifying system gear. Chart of electric circuit system for direct communication instructions to aircraft. (ND22-6067).

Electric system for direct communication to and direction of engine. (ND22-6068).

ENCLOSURE (B), continued

CV-UNRYU

Amplifier system. Plan of electric system for navigation department direct communication. (ND22-6069).

Sound powered telephone. Chart of electric system. (ND22-6070).

Loud-speaker command equipment circuit system model 202. (Aeroplane control). (ND22-6071).

Amplifier command communication gear. Electric system. (ND22-6072).

Model 1 mark 2 teltalk. Chart of connections. (ND22-6073).

Secondary power source. A.C. 50V supply. (ND22-2204).

D.C. switchboard for steering engine circuit diagram. (ND22-2218).

A.C. 50V power plant diagram. (ND22-2205).

Secondary power source. D.C. 20V supply circuit. (ND22-2206).

Primary power source. Ring main and control circuit. (ND22-2203 (b).

Primary power source. Ring main and control circuit. (ND22-2203 (a).

D.C. 20V power source sections. (ND22-2207).

Illuminating lights circuit. Working lights (Includes hangar control system and all night light control system). (ND22-2226).

Illuminating lights circuits. Reserve lighting system. (Boiler room system). (ND22-2229).

Power circuits. D.C. motor for airplane elevator. (ND22-2217).

Special electrical gear. Chart of electric circuit setup to indicate no voltage on rudder steering electric motors. (ND22-6074).

Electric power circuit. D.C. motors for anchor. (ND22-2211).

Illuminating light system. Working lights. (After engine room, starboard and port). (ND22-2228).

Illuminating light system. Working lights. (Forward engine room, starboard and port). (ND22-2227).

Electric power circuit DC motors - for 2.5 metric ton winch and auxiliary fan for boiler room. (ND22-2208).

Electric power circuit D.C. motor for aft #5, #6 group fans. (ND22-2216).

Electric power circuit D.C. motor for forward #5, #6 group fans. (ND22-2215).

Light locations and number of lamps and table fans. (ND22-2230).

ENCLOSURE (B), continued

CV-UNRYU Wiring diagram of illumination signal lights and special circuit equipment. (ND22-6075).

Lighting circuits and locations. (ND22-2221).

Same as above. (ND22-2220).

Same as above. (ND22-2219).

Same as above. (ND22-2222).

Same as above. (ND22-2223).

Electric power circuit D.C. motor for forwar #4 group fans. (ND22-2213).

Lighting circuits and locations. Working lights (Hangar deck). (ND22-2225).

Lighting circuits and locations. (ND22-2224).

Electric power circuit D.C. motor for aft #4 group fans. (ND22-2214).

Electric power circuit D.C. motor for aft #1, #2, #3 group fans. (ND22-2212).

Electric power circuit, galley, dental office, sickbbay, disinfecting, water purification and DC motors for refrigerators and washing machines. (ND22-2209).

Electric power circuit for DC motor for drain cooling pump, main engine revolution, water condenser and suction pumps, oil purifying machine. (ND22-2210).

Airplane control signal system elevator position and movements indicator electric system. (ND22-6076).

Starboard forward switchboard room switchboard wiring diagram part 2. (ND22-6077).

Same as above. Part I. (ND22-6078).

Forward port switchboard room. Chart of switchboard wiring. Part 2. (ND22-6079).

Same as above. Part I. (ND22-6080).

PORT aft switchboard room switchboard wiring diagram. (ND22-6081).

Switchboard junction box and distribution panel. (ND22-6082).

Emergency power. (ND22-6083).

* * * * *

ENCLOSURE (B), continued

PACKAGE TITLE: BOOKLET OF ELECTRICAL PLANS, CV-TAIHO CLASS

NavTechJap Document No: ND50-1079

ATIS No: 4529

* * * * *

PACKAGE TITLE: BLUEPRINTS: ELECTRICAL PLANS, CA-IBUKI

NavTechJap Document No: ND22-6300

ATIS No: 4530

CA-IBUKI Power equipment steering engine use electric motor wiring layout diagram. (ND22-6300).

D.C. switch board 220V reserve power source use (aft sec. use) steering engine use. Circuit wiring diagram. (ND22-6301).

Emergency power source and oiler electricity supply equipment. Power circuit layout diagram. (including portable pump and blower). (ND22-6302).

Searchlight equipment circuit layout diagram (including elevator equipment and welding equipment circuits). (ND22-6303).

Various equipment. Test switch board and charging equipment power source circuit layout diagram. (ND22-6304).

Miscellaneous equipment emergency light plate. (ND22-6305).

Special circuit equipment. Graduated illuminating lights circuit layout diagram. Optical and navigation connections. (ND22-6306).

Special circuit equipment. Graduated illuminating light circuit layout diagram (ship building connection). (ND22-6307).

Special circuit equipment. Graduated electric light circuit layout diagram (ship building connection). (ND22-6308).

Special circuit equipment. Aircraft section illuminating and signal lights plate. (ND22-6309).

Special circuit equipment. Aircraft sections illuminating and signal lights circuit layout diagram. #2 revision diagram. (ND22-6310).

Illuminating lights and electric fan rooms personnel charts. (ND22-6311).

CA-MYOKO (NACHI Class). D.C. 220V reserve power supply 20V power supply. Gyro-compass power supply circuit diagram. (ND22-6312).

CA-IBUKI Illuminating lights equipment #2 work lights - model 2. Installed position and essentials diagram. (ND22-6313).

ENCLOSURE (B), continued

CA-IBUKI Illuminating lights equipment. Illuminating lights power supply layout. (ND22-6314).

Illuminating light equipment power supply essentials diagram. (ND22-6315).

Power plants (engine). AA gun revolution and elevation. AA gun ammo hoist. MG firing equipment. MG ammo hoist. carbon eliminating covered turret revolution. Electric motor wiring diagram. (ND22-6316).

Power equipment. Bilge pump, portable fuel oil pump, - light oil pump, aux. blower - aux. atomizer pump - fresh water pump - sea water pump use electric motor circuit layout diagram. (ND22-6317).

Illumination light equipment. Illumination light circuit and detailed layout diagram. #1 and 2 aircraft hangars layout. (abbreviated 1 Hi - Ka and 2 Hi - Ka). (ND22-6318).

Illuminating light equipment. Illumination light circuit layout detailed diagram. Forward reserve light layout. (abbreviated Mae - Yo). Aft reserve light layout. (abbreviated Ushiro - Yo) (ND22-6319).

Illumination light equipment circuit layout detailed diagram. Forward and aft section reserve light layout. (Forward - 4, aft - 4). (Inner ship passage layout). (ND22-6320).

Illuminating light equipment. Illuminating light circuit layout detailed diagram. #1 and 2 aircraft hangar control layout (abbreviated 1 Hi - Ka, 2 Hi - Ka). Including all-night lights control layout. (Abbreviated Ji - Ka). (ND22-6321).

Illuminating lights equipment. Illuminating lights and electric fan circuit layout detailed diagram. #1, 2, 3, 4 magazine layout (ND22-6322).

Illuminating light equipment. Circuit layout detailed diagram. Aft alert control layout. (abbreviated Ushiro - Ke). (ND22-6323)

Illuminating light equipment. Circuit layout detailed diagram. Forward alert control layout. (abbreviated Mae - Ke). (ND22-6324).

Illuminating light equipment. Illuminating light and electric fan circuit layout detailed diagram. #4 all-night lights layout. (abbreviated 4 Ji). (ND22-6325).

Illuminating light equipment. Illuminating light and electric fan circuit layout detailed diagram. #3 all-night light layout. (abbreviated 3 Ji). (ND22-6326).

Illuminating light equipment. Illuminating light and electric fan circuit layout detailed diagram. #2 all-night lights system. (abbreviated 2 Ji). (ND22-6327).

Illuminating light equipment. Illuminating light and electric fan circuit layout detailed diagram. #1 all-night light layout. (abbreviated 1 Ji). (ND22-6328).

ENCLOSURE (B), continued

CA-IBUKI

Illuminating light equipment. Illumination light and electric fan plat. (Aft section of hold). (ND22-6329).

Illuminating light equipment. Illuminating light and electric fan plat. (Forward part of hold). (ND22-6330).

Illuminating light equipment. Illuminating light and electric fan plat. Aft section of hold deck. (ND22-6331).

Illumination light equipment. Illumination light and electric fan plat. Forward section of hold deck. (ND22-6332).

Illumination light equipment. Illumination light and electric fan plat. (Aft section of lower deck). (ND22-6333).

Illuminating light equipment. Illumination light and electric fan plat. Aft section of main deck. (ND22-6335).

Illuminating light equipment. Illumination light and electric fan plat. Forward section of lower deck. (ND22-6334).

Illuminating light equipment. Illumination light and electric fan plat. Forward section of main deck. (ND22-6336).

Illuminating light equipment. Illumination light and electric fan plat. Aft section of upper deck. (ND22-6337).

Illuminating light equipment. Illumination light and electric fan plat. Forward section of upper deck. (ND22-6338).

Illuminating light equipment. Illumination light and electric fan plat. Aft section of upper most deck. (ND22-6339).

Illuminating light equipment. Illumination lights and electric fan plat. Forward section of upper most deck. (ND22-6340).

Illuminating light equipment. Illuminating light and electric fans plat. Machine gun deck - aft section. (ND22-6341).

Illuminating light equipment. Illumination lights and electric fan plat. Forward section of machine gun-deck. (ND22-6342).

Illuminating light equipment. Illumination light and electric fan plat. (Aft section of flight deck). (ND22-6343).

Illuminating light equipment. Illumination lights and electric fans plat. (Forward section above flight-deck). (ND22-6344).

Illuminating light equipment. Illumination light circuit layout diagram. Aft alert control layout. (abbreviated Ushiro - Ke) (ND22-6345).

Illuminating light equipment. Illumination light circuit layout diagram. Forward alert control layout. (abbreviated Mae - Ke). (ND22-6346).

Illuminating light equipment. Illuminating light and electric fan circuit layout diagram. #4 all-night light layout. (abbreviated 4 Ji). (ND22-6347).

ENCLOSURE (B), continued

CA-IBUKI Illuminating light equipment. Illumination light and electric fan circuit layout diagram. #3 all-night light layout. (abbreviated 3 Ji). (ND22-6348).

Illuminating light equipment. Illumination light and electric fan circuit layout diagram. #2 all-night light layout. (abbreviated 2 Ji). (ND22-6349).

Illuminating light equipment. Illumination lights and electric fan circuit layout diagram. #1 all-night light layout. (abbreviated 1 Ji). (ND22-6350).

Illuminating light equipment. Illuminating light and electric fan circuit layout diagram. No's. 1, 2, 3, and 4 magazine lines. (abbreviated 1 da 2 da 3 da and 4 da). (ND22-6351).

Illuminating light equipment. Illuminating lights and electric fan circuit layout diagrams. Forward reserve light layout. (abbreviated Mae - Yo). (ND22-6352).

Illuminating light equipment. Illumination lights circuit layout diagram. No. 1 and 2 aircraft hangars control line. (abbreviated 1 Hi - Ka). (2 Hi - Ka). (ND22-6353).

Illuminating light equipment. Illumination light circuit layout diagram. Aft section reserve lights layout. (Inner ship passage line). (Aft - 4). (ND22-6354).

Illuminating light equipment. Illuminating light circuit layout diagram. Forward reserve light layout. (Inner ship passage line). (Forward - 4). (ND22-6355).

Illumination light equipment. Illumination light circuit layout diagram. Control board, switchboard, etc. direct power supply layout. (ND22-6356).

Electric signal light equipment plat. (ND22-6357).

Electric signal light equipment 60 cm. signal light and 2 kilometer signal lights circuit layout. (ND22-6358).

Electric signal lights equipment. Circuit layout diagram. (ND22-6359).

Electric signal lights equipment. Required ordnance personnel figure. (ND22-6360).

Generator's and electric motor personnel figures. (ND22-6361).

Circuit system leading into wire protection covering between compass bridge and steering engine room. (ND22-6362).

Special circuit equipment. Wireless equipment power source circuit layout diagram. (ND22-6363).

Power equipment. Cooking equipment, refrigerator and other kitchen equipment use. Circuit layout equipment. (ND22-6364).

ENCLOSURE (B), continued

CA-IBUKI Special use circuit equipment. Diesel fire prevention pump starting use electric motor circuit layout diagram. (ND22-6365).

Special circuit equipment. Navigation and optical ordnance power source circuit layout diagram. (Including loud-speaker order equipment.) (ND22-6366).

Power equipment. Large exhaust and hanger blower, electric motor circuit layout diagram. (ND22-6367).

Power equipment. 5, 6 type ventilator electric motor circuit layout diagram. (ND22-6369).

Power equipment. 1, 2 and 3 type ventilators electric motor circuit layout diagram. (ND22-6370).

Power equipment. Aviation ordnance circuit layout diagram. (ND22-6371).

Power equipment. Electric radiator circuit layout diagram. (ND22-6372).

Power equipment. Industrial use various type electric heaters circuit layout diagram. (ND22-6373).

Power equipment. Hot smoke cooling and air compressor pump use electric motor circuit layout diagram. (ND22-6374).

Power equipment. Fire prevention bilge pump main engine revolution and oil purifier drain cooling pump use electric motor circuit layout diagram. (ND22-6375).

Power equipment. Engine room ventilation electric motor circuit layout diagram. (ND22-6376).

Power equipment. Yielding element for deck pendant carries arresting gear and wireless mast raising and lowering equipment use electric motor circuit wiring diagram. (ND22-6377).

Power equipment. Airplane elevator and bomb hoist use electric motor circuit layout diagram. (ND22-6378).

Power equipment cooler - Icemaking machine - Dehydrating machine - Laundry machine - Lemonade machine - use electric motor circuit layout diagram. (ND22-6379).

Power equipment (engine) anchor hoist, carge hoist (2.5 ton) capstan engine use electric motor circuit layout diagram. (ND22-6380).

Main control board circuit wiring diagram. (ND22-6381).

Auxilary control board circuit wiring diagrams. (ND22-6382).

Power plant (engine). Boar - hoistering engine and 5 ton crane use electric motor circuits wiring diagrams. (ND22-6383).

ENCLOSURE (B), continued

CA-IBUKI Special type multicone cable terminal box wiring essentials. -6384).

* * * * *

PACKAGE TITLE: LAYOUT DIAGRAM. D.C. 220 VOLT EMERGENCY POWER SOURCE, D.C. 20 VOLT POWER SOURCE, GYRO-COMPASS POWER SOURCE, CA-MYOKO

NavTechJap Document No: ND22-2274

ATIS No: 4531

* * * * *

PACKAGE TITLE: BLUEPRINTS: ELECTRICAL PLANS, CA-CHIKUMA

NavTechJap Document No: ND22-6000

ATIS No: 4532

CA-CHIKUMA Ring main circuit and control circuit layout. (ND22-6000).

Emergency electrical cable installation sketch. (ND22-6001).

Electrical circuit for main control switchboard (forward). (ND22-6002).

Electrical circuit for secondary control switchboard (aft). (ND22-6003).

Power circuit for various electric motors used in repair work. (ND22-6004).

Power circuit for electric motors used in bilge pumps, heavy oil pumps, and sea water pumps for fire protection. (ND22-6005).

Power circuits for motors in air compressor pump special air compressor pump and washing machine. (ND22-6006).

Modification of a section of power circuit for electric steering engine. (ND22-6007).

Modification of a section of illumination lights normal control circuit. (ND22-6008).

Additional installation of 20cm signal lamps and direction signal lamps. (ND22-6009).

Range finder turret lead-in-wire connection diagram. (ND22-6010).

Mk. 3 loudspeaker telephone model 1, circuit layout diagram. (ND22-6011).

ENCLOSURE (B), continued

CA-CHIKUMA Speaking tube electric bell circuit layout diagram (part 3), (communication control). (ND22-6012).

Speaking tube electric bell circuit layout diagram (part 2), (torpedo battle control, navigation section communication, emergency control, aviation section, general communication). (ND22-6013).

Speaking tube electric bell circuit layout diagram (part 4) (engine control). (ND22-6014).

Loudspeaker telephone equipment, phone circuit diagram for torpedo battle control direct and general exchange; one section revised diagram. (ND22-6015).

Loudspeaker telephone equipment. Direct loudspeaker telephone circuit layout (part 6). (Engine and electric motor control communication) (ND22-6016).

Loudspeaker telephone equipment. Engine control. Direct telephone circuit diagram. One section revised diagram. (Boiler section control). (ND22-6017).

Loudspeaker telephone equipment. Engine control. Direct telephone circuit diagram. One section revised diagram. (Engine section control). (ND22-6018).

Revised diagram of communication circuit layout accompanying movement of position of AA control officer. (AA control officer orders). (ND22-6019).

Navigation section control communication equipment. Steering and emergency steering communication circuit. Layout diagram. (ND22-6020).

Navigation section control communication equipment. Rudder angle communications circuit. Layout diagram. (ND22-6021).

Torpedo battle control equipment, firing report. Special air ready report. Circuit diagram. (ND22-6022).

Torpedo battle control equipment diagram. (ND22-6023).

Engine control communication equipment. Alarm DC electric current (engine and electric control). Circuit diagram. One section auxiliary diagram. (ND22-6024).

Engine section communication equipment. Engine section crew alert stations. Alarm circuit diagram. (ND22-6025).

Engine control communication equipment. Voltage type speedometer electric circuit diagram. (Revised diagram). (ND22-6026).

Degaussing cable installation and electric circuit. (ND22-6027).

Diagram for newly installed 20cm signal light. (ND22-6028).

New installation of calibrated illuminating lamps at AA control station. (ND22-6029).

ENCLOSURE (B), continued

CA-CHIKUMA Illumination light circuit wiring layout purple light diagram. Open passage system. (ND22-6030).

Engine and construction control equipment. Circuit diagrams of engine room speed communication, revolution communication, reply electric bell. (ND22-6031)

* * * * *

PACKAGE TITLE: BLUEPRINTS: ELECTRICAL PLANS, CL-OYODO

NavTechJap Document No: ND22-6115

ATIS No: 4533

CL-OYODO Illuminating light, power supply. (ND22-6115).

Chart of illumination equipment. (ND22-6116).

Circuit system for the electric light signal equipment. (ND22-6117).

Illuminating light circuit system. Emergency light system #2. (ND22-6118).

Illuminating light circuit system. Emergency light system #1. (ND22-6119).

Table showing the illuminating light shutters and shock proof installations. (ND22-6120).

Chart of circuit systems for special circuits and for various 100V lights. (ND22-6121).

Chart of illuminating light circuit system. (ND22-6122).

Electric light circuit. Forward standard control system #1. (ND22-6123).

Same as above, plus standard control - battle light switch system #1. (ND22-6124).

Illuminating light circuit system forward and aft standard central system #2. (ND22-6125).

Illuminating light circuit system. Forward brown out system #1 (alarm light). (ND22-6126).

Illuminating light circuit system. Aft brown out system. (ND22-6127).

Illuminating light circuit system. Forward and aft brown out systems #2. (ND22-6128).

Illuminating light and blower circuit system. Aft battle light #1. (ND22-6129).

ENCLOSURE (B), continued

CL-OYODO Same as above. #2. (ND22-6130).

Same as above. Forward battle light #2. (ND22-6131).

Same as above. Forward battle light #1. (ND22-6132).

Illuminating light circuit system. Aft starboard working light system #1. (ND22-6133).

Illuminating light circuit system. Aft, starboard and port working light system #2. (ND22-6134).

Illuminating light circuit system. Aft, port working light #1. (ND22-6135).

Illuminating light circuit system. Forward, starboard and port working light (powder magazine) system #2. (ND22-6136).

Illuminating light circuit system. Forward, starboard working light (powder and shell magazine) system #1. (ND22-6137).

Illuminating light circuit system. Forward, port working light system #1 (shell and powder magazine). (ND22-6138).

Diagram of positions of electric lights and fans. (ND22-6139).

Same as above. (Hold deck). (ND22-6140).

Same as above. (Bottom deck). (ND22-6141).

Same as above. (Middle deck). (ND22-6142).

Same as above. (Upper deck). (ND22-6143).

Same as above. (Shelter deck-above). (ND22-6144).

Chart of set up of type 96 searchlight controller, model 2. (ND22-6145).

Chart of first, second and third searchlights. (ND22-6146).

Chart of circuit for large electric light signal equipment. (ND22-6147).

Chart of circuit for D.C. generator motive power. 2 kw 440V, 1 kw 22V, 0.2 kw 0-8.8V for 20V signal. (ND22-6148).

Secondary electric power equipment D.C. 20V electric power lines section diagram. (D.C. 100V include). (ND22-6149).

Classification blueprint of A.C. 60V electric power supply system. Secondary electric power supply equipment. (ND22-6150).

Chart of power supply circuits for dynamos of 20V, 100V D.C. (ND22-6151).

Charts of circuits and wiring of various electrical apparatus - power section. (ND22-6152).

ENCLOSURE (B), continued

CL-OYODO Map of electric circuit system for special use - 100V D.C. (ND22-6153).

Chart of circuit systems for illuminating light equipment for special circuit and for various 20V lights. (ND22-6154).

Electric circuit system for motive power. Aft ventilating machine system. (ND22-6155).

Chart showing the wiring of primany power supply equipment. (ND22-6156).

Chart of setup in steering engine room, switchboard room and storage battery room. (ND22-6156).

Main battery turret - diagram of incoming lines. (#1 turret). (ND22-6157).

Chart of arrangement of electrical equipment - secondary electric power. Searchlight, motive power, miscellaneous and equipment for special use (lower deck and hold). (ND22-6158).

Chart of arrangement of electrical equipment - same as above (for middle deck and super structure). (ND22-6159).

Chart showing arrangement of control circuit breakers for main control board and the control board next to engine room and the AC circuit breaker for the power supply. (ND22-6160).

Bridge switch room, switchboard diagram. (ND22-6161).

List of generators, electric motors, electric heaters and transformers. (ND22-6162).

Forward switchboard room, switchboard diagram. (ND22-6163).

Forward switch room, switchboard wiring chart. (ND22-6164).

Chart showing plan of generator room #1. (ND22-6165).

Chart of equipment in secondary control board room. (ND22-6166).

Chart of equipment in #4 generator room. (ND22-6167).

Chart of arrangements of electrical circuits - primary power supply installations. (ND22-6168).

Chart of wiring for main control board. (ND22-6169).

Chart of wiring in side engine control control board for #3, #5 generators. (ND22-6170).

Chart of wiring for the secondary control board. (ND22-6170).

Chart of side engine control board for #1 generator. (ND22-6172).

Chart of wiring in side engine control board for #4 generator. (ND22-6173).

ENCLOSURE (B), continued

CL-OYODO Chart of wiring for side engine control board, #2 generator.

Chart of plan for electric plant. (ND22-6175).

Main control room, aft wiring room chart of wires in wiring board. (ND22-6176).

Chart of plan for aft storage battery room. (ND22-6177).

Chart of set up for noise control room and aft wiring room. (ND22-6179).

Chart of the plan for #2 generator room. (ND22-6180).

Chart of plan for third generator room. (ND22-6181).

Chart of equipment in aft transformer room. (ND22-6182).

Chart of equipment in forward transformer room. (ND22-6183).

Chart of cyclic type main circuit in aft engine room. (ND22-6184).

Bridge switch room equipment chart. (ND22-6185).

Bridge switch room, switchboard wiring chart. (ND22-6186).

Main battery, turret guns, electric wiring chart of lead in lines #2 turret. (ND22-6187).

Forward wiring room. Chart of wiring board. 2(g series - m series). (ND22-6188).

Machine gun power room installation chart. (ND22-6189).

Bow switchboard room. Chart of switchboard. (N series - S series). ND22-6190).

Chart of wiring connections. Aft wiring room and captains room. (ND22-6191).

Chart of installations of forward switchboard room. (ND22-6192).

Chart of circuit system for motive power. (ND22-6193).

Chart of circuit system for motive power. Motors for catapults for turning derricks, anchor windlass, cargo cranes and boat cranes. (ND22-6194).

Charts of circuit systems for motive power. System of forward ventilating machines. (ND22-6195).

Chart of circuit systems for motive power. Machine tools and testing machines. (ND22-6197).

Chart of circuits systems for motive power. Forward special ventilation equipment. (ND22-6196).

Chart of power circuit system. Motors for anti-aircraft guns, elevating, AA equipment, machine gun motive power, ammunition hoist. (ND22-6198).

ENCLOSURE (B), continued

CL-OYODO

Chart of power circuit for motive power. Motors for engine room ventilating machines and dynamo room ventilating machine. (ND22-6199).

Chart of motive power circuits electric supply for tankers and emergency supply of power. (ND22-6200).

Power circuit system. Main batter power, firing panel, range finder traverse, turret ventilation motor. (ND22-6201).

Motive power circuit charts aft bilge. Motors for oil purifying machines, main machines, water and crude oil pumps, gasoline and air compressor pumps. (ND22-6202).

Chart of circuit which relays a non voltage load to steering engines. (ND22-6203).

Circuit layout diagram for secondary power source, searchlights, (motive) power, special and miscellaneous use. (ND22-6204).

Motive power circuit layout diagram. Electric motors for forward bilge fuel oil pumps and auxiliary blowers. (ND22-6205).

Motive power circuit layout diagram. Engines for coolers, refrigerators, cold storage and lemonade making machine. (ND22-6206).

Motive power circuit layout diagram. Aft section special blowers system. (ND22-6207).

A.C. 220V, 100V, 60V power source circuit layout diagram. (ND22-6208).

Table of illuminating lights and appurtement ordnance. (ND22-6209).

Circuit diagram layout for type 96 20 cm. searchlight - model 1 and type 96 searchlight controller - model 2. (ND22-6210).

Special circuit layout diagrams. A.C. 100V. (ND22-6211).

Diagrams showing wiring in loud speaker telephone system, in speaking tube electric bell system and in air transmitted electric bell system. (ND22-6212).

Special use circuit installation. Sperry type (searchlight). #3 gyro compass model 2 multitype 100V. (ND22-6213).

Installation diagram - voltage type speed indicator communication model 1 : mod. 2. (ND22-6214).

Chart of terminal receivers (Bridge switchboard room, bow switchboard room, stern switchboard room, telephone exchange room). (ND22-6215).

Chart of telephone line installations. Special multiple wiring equipment. (ND22-6217).

Chart of installations of telephone exchange room. (ND22-6216).

ENCLOSURE (B), continued

CL-OYODO Chart of telephone line construction multiple wires for use in communication. (ND22-6218).

Chart of telephone line layout. Special multiple wiring equipment. (ND22-6219).

Loud-speaker system equipment circuit diagram. #5 model 2. (ND22-6220).

Refrigeration plant and light oil tank. Electric thermometer equipment. (ND22-6221).

Tables of electrical systems - artillery direction communication equipment. AA commanding officer's orders. AA and machine gun communication searchlight. Smoke communications (including catapult direction communications). (ND22-6222).

Communications use - multi-conductor lines - for engine dept. and general use. (ND22-6223).

Blueprint of installations of communications circuits and special circuit equipment (excluding gyroscope and including miscellaneous equipment, oil and water surface indicators equipment). (ND22-6224).

Charts of wiring systems of loudspeaker telephone equipment. (leaving out secrets). (ND22-6225).

Charts of wiring for communication equipment used to give command during action. (ND22-6226).

Chart of communication equipment. Circuits for engineering dept. and navigation dept. (ND22-6227).

Diagram showing multi-strand wiring for communications. (ND22-6228).

Radar equipment - chart of wiring installations - revolving angle communications. Range reporter - direction warning communication direct communications telephone gyro-compass. (ND22-6230).

Chart showing usage of special multi-strand wire. (ND22-6230).

Chart of circuit wiring for electrical thermometer apparatus in shell and powder magazine. (ND22-6231).

Circuit diagram for alarm bell system. (ND22-6232).

Alarm bell system table. (ND22-6233).

Chart of electric circuits for electric thermometer apparatus in shell and powder magazine.

* * * * *

ENCLOSURE (B), continued

PACKAGE TITLE: BLUEPRINTS: ELECTRICAL PLANS, DD-TERUTSUKI CLASS

NavTechJap Document No: ND22-6500

ATIS No: 4534

DD-AKITSUKI AC main switch board and AC switch board (after section) 220V wiring diagram. (ND22-6500).

Actual and experimental wire laying diagrams. (ND22-6501).

Illumination lighting equipment circuit layout diagram. Working light layout. Purple light layout. (ND22-6502).

Illuminating light equipment circuit diagram. Ordinary control system. Alarm control system. (ND22-6503).

Various types of expendable equipment. Circuit junction box. Interior wiring charts. (ND22-6504).

Spare parts box list. (ND22-6505).

Distribution room. Electric equipment disposition diagram. (ND22-6506).

After battery room. Battery disposition. (ND22-6507).

Fwd battery room. Battery disposition. (ND22-6508).

Type 99 fathometer. Wave transmitter and receiver tank cover, assembly. (ND22-6509).

Do, disassembly. (ND22-6510).

Type 99 fathometer recorder installation bracket. (ND22-6511).

Bridge resting room and firing order room. Type 99 fathometer. Equipment disposition diagram. (ND22-6513).

Type 99 fathometer circuit layout diagram. (ND22-6514).

Sperry type Mk 2 gyro-compass modif. 1 circuit layout diagram. (ND22-6515).

Type 91 anemoscope modif. 1 circuit layout diagram. (Special circuit equipment). (ND22-6516).

Quadruple mount torpedo tubes. Torpedo loading safety equipment and dial illumination light circuit layout diagram. (ND22-6517).

Torpedo firing circuit layout diagram. (ND22-6518).

Low voltage light circuit layout diagrams. (ND22-6519).

Engine room. Electric thermometer and electric salenometer circuit diagram. (ND22-6520).

Steering engine electric motor. No voltage order circuit diagram. (ND22-6521).

ENCLOSURE (B), continued

DD-AKITSUKI

2 kw signal light model 2 AC 100V wiring diagram. (ND22-6522).

Signal & navigation lights installation diagram. (ND22-6523).

Electric signal light equipment. Navigation & signal light circuit layout diagram. (ND22-6524).

Illuminating light equipment (including electric fans). Personnel chart. (ND22-6525).

Illumination light equipment circuit layout diagram. Reserve power source communication layout. (ND22-6526).

Illumination light equipment (including fans) circuit layout diagram. All-night light layout. (ND22-6527).

Illumination light equipment diagram appendix. (ND22-6528).

Aft section distribution board wiring diagram. (ND22-6529).

Forward distribution board wiring diagram. (ND22-6530).

Special type multi-conductor cable electric wiring distribution diagram. (ND22-6531).

Call bell equipment circuit layout diagram. (ND22-6532).

Sea water tank oil-water surface indicator circuit layout diagram. (ND22-6533).

Speaking tube electric bell circuit layout diagram. (ND22-6534).

Loudspeaker telephone speaking tube electric bell equipment circuit layout diagram. (ND22-6535).

Loudspeaker telephone circuit layout diagram. (ND22-6536).

Alarm equipment circuit layout diagram. (ND22-6537).

Engine control communication equipment. HP signal light circuit layout diagram. (ND22-6538).

Engine control communication equipment. Ships smoke communication and voltage type speedometer circuit layout diagram. (ND22-6539).

Engine control communication equipment. Fire drill and smoke screen communication circuit layout diagram. (ND22-6540).

Engine control communication equipment. Reply and alert communication circuit layout diagram. (ND22-6541).

Engine control communication equipment. Revolution communication circuit layout diagram. (ND22-6542).

Engine control communication equipment. Engine room speed communication circuit layout diagram. (ND22-6543).

ENCLOSURE (B), continued

DD-AKITSUKI Engine control communication equipment circuit layout diagram. (ND22-6544).

Navigation section communication equipment steering and emergency steering communication circuit layout diagram. (ND22-6545).

Navigation section communication equipment. Rudder angle communication circuit layout diagram. (ND22-6546).

Navigation section communication equipment circuit layout diagram. (ND22-6547).

Depth charge battle control equipment. Communication circuit layout for orders, ready and firing orders. (ND22-6548).

Torpedo battle control communication equipment. Communication circuit diagram for traversing indicator, firing indicator and firing order systems. (ND22-6549).

Torpedo battle control communication equipment. Circuit layout diagram. (ND22-6550).

Torpedo battle control communication equipment. Orders and ready communication circuit diagram. (ND22-6551).

Electric motors, generators, and accessones wiring diagrams. (ND22-6552).

Searchlight equipment circuit layout diagram. (ND22-6553).

DC switchboard 20V wiring diagram. (ND22-6554).

AC switchboard for forward section 220V wiring diagram. (ND22-6555).

Secondary power source equipment, AC 60V and DC 20V power source circuit layout diagram. (ND22-6556).

AC and DC switchboard 100V wiring diagram. (ND22-6557).

Secondary power source equipment DC 100V power source circuit layout diagram. (ND22-6558).

DC switchboard 20V, profile and wiring diagram. (ND22-6559).

AC and DC switchboard 100V, profile and wiring diagram. (ND22-6560).

DD-HARUTSUKI Primary power source and power plant (includes small model battery charging equipment) circuit layout diagram. (ND22-6561).

AC switchboard 22-V wiring diagram. (ND22-6562).

DD-SHIMOTSUKI Primary power source & power supply equipment. (including small model batteries & charging equipment) circuit system. (ND22-6385)

Wiring diagram of: AC main distributing board, AC distributing board, AC distributing board for aft use 220 volts. (ND22-6386).

ENCLOSURE (B), continued

DD-SHIMOTSUKI Illuminating equipment. (including electric fan). Diagram showing location. (ND22-6387).

Wiring diagram for: DC 100V power supply-secondary power supply. (ND22-6388).

Wiring diagram of AC distributing board for use forward 220 volts. (ND22-6389).

Wiring diagram for: AC 60 volts and DC 20 volt power supply-in secondary power supply. (ND22-6390).

Wiring diagram of DC 20 volts distributing board. (For communication). (ND22-6391).

Distribution chart of all phase AC loads. (ND22-6392).

Assembly diagram of 220 volt AC main distribution panel. (ND22-6393).

Wiring diagram of AC & DC distributing board (100V). (ND22-6394).

Circuit system of searchlight equipment. (ND22-6395).

Assembly diagram of AC distribution panel (220V used at forward section). (ND22-6396).

Special purpose circuit-steering engine motor-circuit system for reporting no voltage. (ND22-6397).

Tabulation of generators, electric generators, motors and parts. (ND22-6398).

All circuit systems--table showing, on which side of ship circuits are laid. (ND22-6399).

Assembly of DC power distribution panel 20V. (ND22-6400).

AC switchboard panel assembly. (100V). (ND22-6401).

Illumination circuit system. (All-nite light system). (ND22-6402).

Wiring diagram of illuminating lights (standard warning control). (ND22-6403).

Wiring diagram of illuminating lights (working lights). (ND22-6404).

Wiring diagram of illuminating lights (reserve lights commutation circuit). (ND22-6405).

Wiring diagram of illumination light equipment. (ND22-6406).

List of illuminating light equipment. (ND22-6407).

Special electric circuit equipment. Diagram of electric circuit system of various low voltage lights. (ND22-6408).

ENCLOSURE (B), continued

DD-SHIMOTSUKI Wiring diagram of electric signal light equipment. Signal lights, navigation light. (ND22-6409).

Table of emergency lights installation. (ND22-6410).

List of wiring diagram of motor, generators and their parts. (ND22-6411).

Arrangement of electrical equipment of forward engine room (including generator & main switchboard). (ND22-6412).

Circuit system of special multicore cables. (ND22-6413).

Wire distribution of special-type multicore cables. (ND22-6414).

Installation diagram of electrical instruments (including generator distribution panel) located in the aft engine room. (ND22-6415).

Power control room. Location diagram of electrical instruments. ND22-6416).

Communication gear for directing torpedo action--circuit system for reporting readiness. (ND22-6417).

Communication gear for directing torpedo action--circuit system for reporting side to which turn is made, instant of fire, side of firing. (ND22-6418).

Communication gear for directing torpedo action--circuit system of gyro-angle signal. (ND22-6419).

Communication gear for directing torpedo action--circuit system for reporting readiness and fire action. (ND22-6420).

Communication gear for directing engineering department--circuit system for reporting speed in engine room. (ND22-6421).

Communication equipment for directing engineering department--circuit system for reporting numbers of revolution. (ND22-6422).

Communication gear for directing engineering department--circuit system for order to stoke and make smoke screen. (ND22-6423).

Communication gear for directing engineering department--circuit system for smoke signal and voltage-type speed indicator. (ND22-6424).

Communication gear for directing engineering department--circuit system for response and emergency signal. (ND22-6425).

Engine department command communication equipment. Horse power. Signal light, electrical system. (ND22-6426).

Main electrical circuit layout of the boiler room and engine room. (ND22-6427).

Navig. department communication equipment. Steering & emergency steering signals circuit systems. (ND22-6428).

ENCLOSURE (B), continued

DD-SHIMOTSUKI Navigation department communication equipment. Circuit system for reporting rudder angle. (ND22-6429).

Loud-speaker telephone circuit system. (ND22-6430).

Circuit system for voice-tube buzzer. (ND22-6431).

Call bell equipment. Circuit system. (ND22-6432).

Circuit system for reporting special alarms. (ND22-6433).

Diagram of circuit for type 91 anemo scope modification 1 special circuit system. (ND22-6434).

Diagram of circuit for Sperry mark 3 gryo-compass model 1 simple type. (ND22-6435).

Special purpose circuit system. Engine room salinometer circuit system. (ND22-6436).

Special circuit system. Torpedo firing circuit system. (ND22-6437).

Charging system for general purpose batteries and exercise head batteries (various electrical installations). (ND22-6438).

Special purpose circuit system. Circuit system for quadruple firing tubes, torpedo loading safety equipment graded illumination. (ND22-6439).

Installation diagram of all signal and navigation lights. (ND22-6440).

Diagram showing the installations and details of type 96 model 1, 90cm infra-red searchlight. (ND22-6441).

Diagram showing the installation and details of type 96 model 2, 90cm infra-red signal light (NAN) controller. (ND22-6442).

Outline of cable lead-ins in each turret strut cylinder of type 98 model A 10cm multiple mount dual purpose gun turret. (ND22-6443).

Layout of distribution panel parts in power control room. (ND22-6444).

Type 96, 90cm searchlight model 1, 100V type 96 searchlight control model 2, 100V DC 220V AC. Diagram of feel line. (ND22-6445).

94 type AA director 10cm multiple mount DP gun firing circuit system. (ND22-6446).

Gunfire action directing signal apparatus DP gun signal. Command & time delay signal circuit system. (ND22-6447).

Gunfire action directing signal apparatus. DP gun signals distance & deflection signal circuit system. (ND22-6448).

ENCLOSURE (B), continued

DD-SHIMOTSUKI Gunfire action directing signal apparatus. Searchlight and smoke signal circuit system. (ND22-6449).

Gunfire action directing signal apparatus. DP gun signal. Swivelling & swevelling angle signal circuit system. (ND22-6450).

DP gun signals. Automatic elevation arrester signal circuit system. (ND22-6451).

Gunfire-action directing signal apparatus lookout signal circuit system. (ND22-6452).

Gunfire-action directing signal apparatus. DP gun signals. Firing locator signal circuit system. (ND22-6453).

DP gun signal pitch and roll indicator circuit system. (ND22-6454).

DP gun signals signal circuit systems for reporting firing time, time of impact, range time indicator. (ND22-6455).

Gunfire-action directing signal apparatus. DP gun signal maintenance signal circuit system. (ND22-6456).

Gunfire-action directing signal apparatus. DP gun signals, signal circuit system for fire control and pitch & roll fire control. (ND22-6457).

Gunfire-action directing signal apparatus. DP gun signals range finder signal circuit system. (ND22-6458).

Gunfire-action directing signal apparatus. DP gun signals. Firing reporting signal circuit system. (ND22-6459).

Gunfire-action directing signal apparatus, AA control. Course turn, course elevation signal circuit system. (ND22-6460).

Gunfire-action directing signal apparatus. AA control command signal circuit system. (ND22-6561).

Gunfire-action directing signal apparatus. AA control direction warning signal circuit systems. (ND22-6462).

Gunfire-action directing signal apparatus. AA control AA fire reporting signal circuit system. (ND22-6463).

Outline of voltage type speed transmitter mounting in fore and aft engine rooms. (ND22-6464).

Electric circuit apparatus for special purpose. Circuit system for KYO type mark 2 log model 2 modification 2 and type 96 dead reckoning tracer model 1 100V. (ND22-6465).

Gunfire-action directing signal apparatus turret #2 & #3 bomb blast warning apparatus circuit system. (ND22-6466).

ENCLOSURE (B), continued

DD-SHIMOTSUKI Diagram showing the equipment and details. Model 1 modification 1. Directional signal lights on both port and starboard sides of compass bridge. (ND22-6467).

Radar-circuit system for turning angle direction warning and distance signal. (ND22-6468).

Installation diagram of 2 K.V.A. single-phase transformer in forward engine room. (ND22-6469).

* * * * *

PACKAGE TITLE: BLUEPRINTS: ELECTRICAL PLANS, DD-ASASHIO AND DD-KAGERO CLASS

NavTechJap Document No: ND22-2400

ATIS No: 4535

DD-MAIKAZE Primary power source power and small and model battery charging circuit layout diagram. (ND22-2400).

AC main switchboard wiring diagram (for forward section). (ND22-2401).

Same as above for aft section. (ND22-2402).

Secondary power source (DC 100V and 80V) circuit layout diagram. (ND22-2404).

Control board wiring diagram (for 100V). (ND22-2405).

DC control board wiring diagram (for 20V). (ND22-2406).

Circuit layout diagram for type 96, 90cm searchlight - model 1, 100V. (ND22-2407).

Wiring diagram for type 96, 90cm searchlight - model 1, 100V and type 96 searchlight controller model 1 - DC 100V and AC 220V. (ND22-2408).

Electric signal light equipment. Circuit layout diagram for navigation and signal lights. (ND22-2414).

Circuit layout diagram for steering electric motor and no-load relay equipment. (ND22-2436).

Circuit layout diagram for primary power source power and small model battery charging. (ND22-2439).

Circuit layout diagram for secondary power source (DC 100V). (ND22-2440).

Circuit layout diagram for various low voltage lights. (ND22-2442)

Circuit layout diagram for illumination lights and fans. All-night lights connection. (ND22-2443).

ENCLOSURE (B), continued

DD-MAIKAZE

Circuit layout diagram for illumination lights and fans. Reserve power source selector connections. (ND22-2444).

Circuit layout diagram for illumination lights and fans. Work-lights and purple colored light connections. (ND22-2445).

Circuit layout diagram for type 96, 90cm, searchlight - model 1, 100V. (ND22-2447)

AC main switchboard and forward switchboard construction instruction book. (ND22-2601).

Experimentation method for electrical ordnance used aboard ASASHIO Class (DDs). (ND22-2502)

Synopsis of results of tests of electrical ordnance aboard ASASHIO Class (DDs) #1 (ND22-2503).

Same as above. #2. (ND22-2504).

Same as above #3. (ND22-2505).

Data of electrical ordnance of ASASHIO Class (DDs). (ND22-2506).

Installation diagram of illumination lights and fan system (ND22-2932).

Circuit diagram for gunnery control communication system. (ND22-2933).

Gunfire control communication equipment circuit layout diagram. (ND22-2934).

Location diagram of electrical ordnance in firing control station. (ND22-2935).

Inner turret electrical ordnance disposition diagram. (ND22-2936).

Location diagram of electrical ordnance inside gunfire control communications station. (ND22-2937).

Wiring diagram of type 96 dead reckoning tracer - modif. 1 - 100V and type 98 mark 2 log - model 2. (ND22-2938).

Circuit layout diagram for type 96 dead reckoning tracer - model 2 - 100V and type 98 log - mark 2, model 2. (ND22-2939)

Circuit layout diagram for power unit for primary power source (including small model battery charger). (ND22-2940).

Circuit diagram for power unit for primary power source (including small model battery charger). (ND22-2941).

Circuit diagram for secondary power source: AC 60V, DC 20V. (ND 22-2942).

Circuit diagram of 100V DC secondary power source. (ND22-2943).

ENCLOSURE (B), continued

DD-MAIKAZE

Circuit layout diagram of secondary power source. (ND22-2944)

Circuit diagram of type 96 90cm.searchlight model 1 - 100V. (ND22-2045).

Circuit layout diagram for type 96, 90cm searchlight - model 1 - 100V. (ND22-2946).

Circuit diagram of illumination lights and impellers. (ND22-2947).

Circuit diagram for electrical signal lights for navigation signaling. (ND22-2948).

Circuit diagram of electric signal lights for navigation and signaling. (ND22-2949).

Navigation dep't communication system. Communication circuit diagram for steering and emergency steering. (ND22-2950).

Circuit diagram of rudder angle relay of navigation department communication system. (ND22-2951).

Circuit layout diagram of navigation department communication system. (ND22-2952).

Circuit diagram for torpedo fire control communication system. (ND22-2953).

Same as above. (ND22-2954).

Circuit diagram for engineering department control communication system. (ND22-2955).

Same as above. (ND22-2956).

Circuit layout diagram for (1) HP signal lights, (2) electric thermometer (3) electrical salinometer. (ND22-2957).

Circuit diagram for loud-speaker telephone system. (ND22-2958).

Circuit layout diagram of loud-speaker telephone system. (ND22-2959).

Circuit diagram for voice tube electric bell system. (ND22-2960).

Same as above. (ND22-2961).

Circuit diagram for buzzer system. (ND22-2962).

Circuit diagram for security buzzer system. (ND22-2963).

Circuit diagram for urgent security communication system. (ND22-2964).

Circuit diagram for oil-water level indicator of sea water primed tank. (ND22-2965).

Circuit diagram of electric salinometer. (ND22-2966).

ENCLOSURE (B), continued

DD-MAIKAZE Circuit diagram for electric thermometer. (ND22-2967).

Diagram of internal hookups for communication system junction and terminal boxes. (ND22-2968).

Wiring diagram of distribution panel. (ND22-2969).

Wiring diagram for distribution box. (ND22-2970).

Circuit diagram for various low voltage lights. (ND22-2971).

Same as above. (ND22-2972).

Circuit and wiring diagram for steering motors and no-potential relay. (ND22-2973).

Circuit diagram layout for steering motors and no-potential relay. (ND22-2974).

Circuit diagram for (1) type 92 quadruple mount torpedo tube assembly model 4 (2) safety device for loading tubes with torpedoes (3) all types of scale floodlights. (ND22-2975).

Same as above. (ND22-2976)

Wiring diagram for various electric motors and generators. (ND22-2977).

Layout of main circuits in boiler and engine rooms. (ND22-2978).

Distribution of main circuits in boiler and engine rooms. (ND22-2979).

Location diagram of electrical ordnance on compass bridge. (ND22-2980).

Location diagram of various ordnance in torpedo fire control room. (ND22-2981).

Location diagram of electrical ordnance in forward steering room. (ND22-2982).

Location diagram of electrical ordnance in aft steering room (ND-22-2983).

Location diagram of electrical ordnance in single and double tube shields. (ND22-2984).

Location of various equipment in gyro compass room. (ND22-2985).

Location diagram of electrical ordnance in telephone room of aft engine room. (ND22-2986).

Circuit diagram of Sperry type mark 2 gyro-compass - signal type. (ND22-2987).

Layout diagram of Speery type mark 2 gyro-compass - single type. (ND22-2988).

ENCLOSURE (B), continued

DD-MAIKAZE

Circuit diagram of type 91 wind velocity and direction indicator. Model 1. (ND22-2989).

Location diagram electrical ordnance in distribution panel room. (ND22-6084).

Distribution diagram of special multiple strand lines. (ND22-6085).

Location diagram of electrical ordnance on forward shelter deck and forward tower deck. (ND22-6086).

Location of circuits and ordnance on forward main and lower decks. (ND22-6087).

Same as above. (ND22-6088).

Primary source power equipment (including small model battery charging equipment) wiring diagram. (ND22-6089).

AC 60V and DC, 20V power (secondary power supply) wiring diagram. (ND22-6090).

* * * * *

PACKAGE TITLE: BLUEPRINTS: ELECTRICAL PLANS, DD-MATSU CLASS

NavTechJap Document No: ND22-2450

ATIS No: 4536

DD-MATSU

Circuit layout diagram for primary power source and equipment. (Including small type battery charging system). (ND22-2450).

AC main switchboard 220V wiring diagram. (ND22-2451).

AC switchboard 220V wiring diagram. (ND22-2452).

Load distribution for each phase of AC power source. (ND22-2453).

Secondary power source equipment. DC 100V power source circuit layout diagram. (ND22-2454).

AC-DC switchboard 100V wiring diagram. (ND22-2455).

Secondary power source - AC 60V, DC 20V power source circuit diagram. (ND22-2456).

Circuit layout diagram of steering motor and no-load reporter. (ND-2457).

Circuit layout diagram for illumination and work lights. (ND22-2460).

Circuit layout diagram for searchlight equipment. (ND22-2466).

Illumination circuit, reserve diagram power change over system. (ND22-2461).

ENCLOSURE (B), continued

DD-MATSU Number 4 mess hall DC 100V source power splice box wiring diagram. (ND22-2458).

Illumination circuit and fan circuit uncontrolled circuit. (ND22-2459).

Bill and alarm communication circuits. (ND22-2462).

Low voltage lighting circuit. (ND22-2463).

Illumination circuit (including fans total number). (ND-22-2464)

Electric signal lights-navigation lights and signal lights. (ND22-2465).

Four pole torpedo tube gage light circuit. (ND22-2467).

Emergency lighting system charging circuit. (ND22-2468).

Special circuit low voltage lighting (ND22-2470).

* * * * *

PACKAGE TITLE: BLUEPRINTS: ELECTRICAL PLANS, SS- I-201 CLASS

NavTechJap Document No: ND22-2600-1

ATIS No: 4537

SS-I-201 Engine control equipment - voltage type speed gauge circuit.

Equipment in radio room. (ND22-2708).

Type 99 sounding gear. (ND22-2709).

Sounding gear wiring diagram. (ND22-2710).

Battery equipment for radio, in forward battery room. (ND22-2711).

Battery equipment for radio aft battery room. (ND22-2712).

Radio and sound gear supply circuits. (ND22-2713).

Antenna arrangement #1 aft. (ND22-2714).

Radio receiver power supply circuit. (ND22-2715).

AC 20V-50V commumication circuit (ND22-2716).

Battery ventilation. (ND22-2717).

Motors and AC generator equipment switchboard. (ND22-2718).

Antenna for underwater communications. (ND22-2719).

ENCLOSURE (B), continued

SS-I-201 Engine control, speed gauge circuit. (ND22-2720).

Generator equipment for radio. (ND22-2721).

Construction of maintenance cylinder (ND22-2722).

Arrangement of equipment in communication room. (ND22-2723).

Battery wiring diagram. (ND22-2724).

General power distribution (ND22-2725).

Battery room equipment. (ND22-2726).

Battery room ventilation. (ND22-2727).

Forward battery room exhaust system. (ND22-2728).

Aft battery room exhaust systems. (ND22-2729).

Arrangement of antenna #2 aft. (ND22-2730).

Arrangement of radar room equipment (revision) . (ND22-2731).

Motor and generator gear for radio. (ND22-2732).

Power supply circuit for radar equipment. (ND22-2733).

Arrangement of radar room equipment. (ND22-2734).

Supply circuit for radio and sound gear. (ND22-2735).

Antenna arrangement forward. (ND22-2736).

Battery wiring diagram #2. (ND22-2737).

Electric exhaust blower (detail). (ND22-2738).

Fan for battery gas exhaust. (ND22-2739).

Switchboard for motor and lights. (ND22-2740).

General distribution circuits. (ND22-2741)

Battery wiring diagram. (ND22-2742).

Battery gas alarm, emergency alarm circuit. (ND22-2743).

AC switchboard, 50V general design and W.D. (ND22-2744).

DC switchboard, general design and W.D. (ND22-2745).

Disposition of electric heaters. (ND22-2746).

Battery room ventilation system. (ND22-2747).

Electrical blowers, 55 cubic meters. (ND22-2748).

Electric circuit for navigation lights. (ND22-2749)

ENCLOSURE (B), continued

SS-I-201

Battery ventilation system. (ND22-2750).

Sea water system, main motors. (ND22-2751).

Main motors bearing lubrication system. (ND22-2752).

Distilled water tank and motors. (ND22-2753).

Engine control equipment, voltage type tachometer. (ND22-2754).

Communications circuit, 20 and 50 volts. (ND22-2755).

Torpedo tube firing lights. (ND22-2756).

Torpedo control equipment. (ND22-2757).

Control boards. (ND22-2758).

Chart of all motors. (ND22-2759).

Power circuits. (ND22-2760).

20V DC and 50V AC communication lines; circuit for flourescent lights. (ND22-2761).

Lighting circuit. (ND22-2762).

Table of electric lights and DC table type fans. (ND22-2763).

Emergency lighting circuit. (ND22-2764).

Radio, control gear and sound receiving circuit. (ND22-2765).

Low voltage drainage control communications circuit. (ND22-2766).

Ventilation. (ND22-2774).

Upper surface rubber cushioning for use forward and aft bulkheads. (ND22-2775).

Battery ventilation equipment. (ND22-2776).

Front and back rubber cushioning for use battery shell cases. (ND22-2777).

Side rubber cushioning. (ND22-2778).

Front and back rubber cushioning for use bulkhead surface. (ND22-2779).

Upper surface rubber cushioning for use between cell cases. (ND22-2780).

Upper surface rubber cushioning for use bulkhead surface. (ND22-2781).

ENCLOSURE (B), continued

SS-I-201 Lower surface rubber cushioning. (ND22-2782).

Lower surface rubber cushioning. (ND22-2783).

Front and back surface rubber cushioning for cell boxes. (ND22-2784).

Front and back surface rubber cushioning. For use bulkheads. (ND22-2785).

Upper surface rubber cushioning for cell cases. (ND22-2786).

Back surface rubber cushioning (ND22-2787).

Side surface rubber cushioning. (ND22-2788).

Diagram of AC electric motors, special E type, sea water cooling tubes, oil feed lines. (ND22-2789).

Distiller pipes. (ND22-2790).

Rudder control. (ND22-2791).

20V and 50V AC communications equipment circuits. (ND22-2792).

20V and 50V communication equipment. (ND22-2794).

Electric signal lights and navigation light circuits. (ND22-2795).

220V DC communication equipment circuits. (ND22-2796).

Power circuits. (ND22-2797).

Illumination light circuits. (ND22-2798

20V and 50V AC communication circuits. (ND22-2799).

* * * * *

PACKAGE TITLE: BLUEPRINTS: ELECTRICAL PLANS, SS-I-400 CLASS

NavTechJap Document No: ND22-2649

ATIS No: 4538

SS-I-400 Arrangement of radar equipment on "A" frame. (ND22-2649).

220V DC, communication equipment circuit. (ND22-2650).

Circuits of AC-CD switchboard for communication. (ND22-2651).

ENCLOSURE (B), continued

SS-I-400

20V - 50V communication power supply also flourescent lighting circuit. (ND22-2652).

Exterior circuits for radio. (ND22-2654).

Lead for Antenna. (ND22-2655).

Periscope mechanism circuit. (ND22-2656).

Antenna arrangement. (ND22-2657).

Circuit for hydrophone. (ND22-2658).

Circuit for t pe 99 sounding gear. (ND22-2659).

General distribution circuits (ND22-2660).

Battery wiring diagram. (ND22-2661).

Power circuits. (ND22-2662).

Table of electric motors. (ND22-2663).

Table of lights and DC, table fans. (ND22-2664).

Lighting circuits. (ND22-2665).

Circuits of 50V AC communication system. (ND22-2666).

AC - DC 50V - 20V, switchboard for communication system. (ND22-2667).

DC switchboard 400 kw wiring diagram. (ND22-2668).

DC switchboard for power and electric lights. (ND22-2669).

Torpedo control communication system. (ND22-2670).

Piping for distilled water tanks. (ND22-2671).

Piping for battery gas exhaust. (ND22-2672).

Sea water cooling pipes. (ND22-2673).

Bearing lubrication pipes, DC electric motors. (ND22-2674).

20V DC communication equipment. (ND22-2675).

Auxiliary circuits. (ND22-2676).

Listening head equipment for hydrophones. (ND22-2677).

Periscope hoisting and lowering gear circuits. (ND22-2678).

ENCLOSURE (B), continued

SS-I-400 Periscope hoisting and lowering gear circuit, alterations. (ND22-2679).

Radar power supply circuits. (ND22-2680).

Radar equipment and installation upper part. (ND22-2681).

Radar equipment and installation lower part. (ND22-2682).

Electric blower for battery gas exhaust. (ND22-2683).

Table of electric motors. (ND22-2684).

Control board for battery. (ND22-2685).

Zero type DC switchboard for battery No. 1. (ND22-2688).

Zero type DC switchboard for battery No. 2 and 3. (ND22-2689).

Pipes for distilled water. (ND22-2690).

Zero type DC switch board for battery. (ND22-2691).

Light circuit. (ND22-2692).

Table of lights and DC table fans. (ND22-2693).

General distributions circuit. (ND22-2694).

Table of electric motor. (ND22-2695).

Flourescent lighting circuit. (ND22-2696).

Signal and navigation lights, wiring diagram. (ND22-2697).

Communication equipment 20V, AC. (ND22-2699).

Communication equipment 50V, AC. (ND22-2698).

Equipment for sound room. (ND22-2700).

Hydrophone for small craft. (ND22-2702).

Hydrophone (model 2-A) wiring. (ND22-2705).

Sounding machine circuit. (ND22-2706).

Signal and navigation light circuit. (ND22-2707).

220V DC communication equipment. (ND22-2601-1).

Degaussing circuit (special type S). (ND22-2602-1).

Torpedo firing circuit, torpedo tube lights circuits, and firing indicator circuit. (ND22-2603-1).

ENCLOSURE (B), continued

SS-I-400

Disposition of equipment in the sound room type 93 hydrophone model 2 for submarine use. (ND22-2604-1).

Power supply circuits for radio. (ND22-2605-1).

Electrically operated shaft equipment. (ND22-2606-1).

Power circuits. (ND22-2607-1).

Special model 6 modif. 1 DC motor for sea water cooling system. (ND22-2608-1).

Circuits for type 92 torpedo modif. 1 charging and heating and hydrogen gas tester. (ND22-2609-1).

Compound type Mk. 21 underwater signal equipment circuits. (ND22-2610-1).

Communication equipment circuits. (ND22-2611-1).

50V AC communication equipment circuit. (ND22-2612-1).

50V AC communication equipment circuit. (ND22-2615-1).

20V DC 50V AC communication power supply circuit flourescent light circuit. (ND22-2614-1).

Torpedo control communications equipment. Torpedo order and gyro-angle circuit. (ND22-2615-1).

General distribution. (ND22-2616-1).

Torpedo firing order and bearing angle range computor. (ND22-2617).

Miscellaneous Documents

NavTechJap Document No.	ATIS No.	Title
ND22-2014	4622	Sound powered telephone-instruction manual.
ND22-2015	4623	Battery telephone switchboard - instruction manual.
ND22-2016	4624	Battery telephone relay and special exchange instruction manual.
ND50-1378.1	4079	Assembly bull horn type SPL-1. Drawing N-4190.
.2		Assembly type 3 reproducer. Drawing N-1418.
.3		Assembly type 2 reproducer. Drawing PK-42.

ENCLOSURE (B), continued

NavTechJap Document No.	ATIS No.	Title
ND50-1378.4		Assembly type 2 modification 1 reproducer. PK-43.
.5		Details blast valve for bull horn. Drawing PK-37.
.6		Diaphragm details-bull horn. Drawing PK-3-2.
.7		Diaphragm assembly-bull horn. Drawing PK-3-1.
.8		Assembly mechanism type 3 reproducer. Drawing TS-1472-I.
ND50-1379	4083	Microphone plans - book of specifications.
ND50-1380.1	4082	Specifications for mark 4 and mark 5 public address equipment. #2688.
.2		Specifications for model 201, 202, 203, and 204. #2683 public address equipment.
ND50-1381.1		Manual for Mk. 4 model 1.
.2	4082	Loud-speaker system (No. 3257, sections I and II).
ND50-1382	4080	Instruction book, type 201 and 202. #2213 announcing equipment.
ND50-1921.1	4626	Sound powered telephone special exchange switch box mod. 2 drawing.
.2		Sound powered telephone special exchange switch box mod. 4 drawing.
ND50-1922.1	4627	Sound powered telephone unit-parts and assembly drawing.
.2		Sound powered telephone model 2 assembly drawing.
.3		Sound powered telephone type 4 mod. 1 assembly drawing.
ND50-1923	4628	Sound powered telephone type 4 mod. 2 assembly drawing.

* * * * *

Documents to be Transferred to BuShips, Navy Department, Washington D.C.

NavTechJap Document No.	ATIS No.	Title
ND22-2799	4629	Instruction manual - type 3 mark 4 gyro compass model 2 (Anschutz type) - instruction manual.
ND50-1070	3228	Navy specifications on rubber covered wire and cable.
ND50-1071	3229	Navy specifications on voltage regulators.

ENCLOSURE (B), continued

NavTechJap Document No.	ATIS No.	Title
ND50-1072	3230	Navy specifications on electrical instruments.
ND50-1073	3231	Navy specifications on DC motors.
ND50-1075	3233	Application table for DC motor starters and controllers.
ND50-1076	3234	Navy specifications for turbo generators.
ND50-1077	3235	Miscellaneous navy specifications on diesel generators.
ND50-1078	3236	Navy specifications on dead front switchboards.
ND50-1079	3239	CV-TAI HO control, metering, and power system diagrams.
ND50-1080.1	3238	Manufacturers test report on 450V. AC circuit breaker book no. 1.
.2		Manufacturers test report on 450V.AC circuit breaker book no. 2.
ND50-1082	3239	Instruction book for destroyer generators and switch board (1-135 KVA and 2-55 KVA, 230V generators).
ND50-1083	3240	Instruction book for type NF circuit breaker (similar to Westinghouse type AB de-ion circuit breaker).
ND50-1084	3242	Miscellaneous specifications on circuit equipment-materials, finishes, nameplates, etc. - issued by Yokosuku Navy Yard.
ND50-1085	3241	Miscellaneous specifications on circuit breakers, connection boxes, switches, transformers, finishes, condensers. and bakelite - issued by Kure Navy Yard.
ND50-1086	3243	Miscellaneous specifications on switches, connection boxes, fuses, resistors - issued by navy department.
ND50-1087.1	3244	Air circuit breaker, carbon type, 800A., DC-front view.
.2		Air circuit breaker, carbon type, 800A., DC-side view.
ND50-1089	3245	Air circuit breaker, 400A., 450V., AC, drawout type - Mitsubishi Denki.
ND50-1177	3246	Air circuit breaker, 1000A., 450V., AC, drawout type - Mitsubishi Denki.
ND50-1178	3247	After switchboard for a submarine - front, rear, and side views.
ND50-1179	3248	Generator and bus tie control panels - front and side views.
ND50-1180	3249	Switchboard for small destroyer - front view.

ENCLOSURE (B), continued

NavTechJap Document No.	ATIS No.	Title
ND50-1181	3250	Switchboard for escort vessel - front and side views.
ND50-1182	3251	After main switchboard for DD-HATSUKAZE - wiring diagram.
ND50-1183	3252	Table of current carrying capacity and diameters of wire and cable.
ND50-1184	3253	Navy department standard drawings for 450V. AC circuit breakers made by Mitsubishi, Shibaura, Misshin, Hitachi, and Fugi - sheets 1 to 21.
ND50-1185	3254	Oscillograms of tests on 800 KVA, 3 phase, 450V, 60 cycle AC generator - sheets 1 to 15.